Lenovo

ThinkSystem DG5000
Hardware Installation and Maintenance Guide

Machine Type: 7DE4

Note

Before using this information and the product it supports, be sure to read and understand the safety information and the safety instructions, which are available at:
http://thinksystem.lenovofiles.com/help/topic/safety_documentation/pdf_files.html

In addition, be sure that you are familiar with the terms and conditions of the Lenovo warranty for your system, which can be found at:
http://datacentersupport.lenovo.com/warrantylookup

First Edition (July 2023)

© Copyright Lenovo 2023.

LIMITED AND RESTRICTED RIGHTS NOTICE: If data or software is delivered pursuant to a General Services Administration (GSA) contract, use, reproduction, or disclosure is subject to restrictions set forth in Contract No. GS-35F-05925.

Contents

Contents i

Safety iii

Chapter 1. Introduction 1

System package contents 1
Specifications 1
Management software 4
Tech Tips 4
Security advisories 4

Chapter 2. System components. 5

Front view 5
Rear view 6
Rear view LEDs 8
PCIe slots 10

Chapter 3. System installation and setup 11

Quick guide 11
Detailed guide 11
Preparing for installation 11
Installing the hardware 12
Cabling controllers 13
Completing system setup and configuration . . 20

Chapter 4. Hardware replacement procedures 23

Replacing a power supply 23
Replacing a power supply 23
Completing the replacement process 24
Replacing a fan 25
Shutting down the impaired node 25
Removing the controller module 25
Replacing a fan 26
Reinstalling the controller module 27
Completing the replacement process 29
Replacing the controller module 29
Shutting down the impaired controller 30
Replacing the controller module hardware . . 30
Running diagnostics 40
Completing the replacement process 40
Replacing a DIMM 40
Shutting down the impaired controller 41
Removing the controller module 41
Replacing a DIMM 43
Installing the controller module 44
Running diagnostics 47
Completing the replacement process 47
Replacing the boot media 47
Pre-shutdown checks for onboard encryption keys 48
Shutting down the impaired controller 50
Removing the controller module 51
Replacing the boot media 53
Transferring the boot image to the boot media 53
Booting the recovery image 57
Completing the replacement process 59
Replacing the real-time clock battery 60
Shutting down the impaired controller 60
Removing the controller module 60
Replacing the RTC battery 63
Reinstalling the controller module 64
Completing the replacement process 66
Replacing mezzanine cards 66
Shutting down the impaired controller 66
Removing the controller module 67
Replacing or installing a mezzanine card . . . 69
Reinstalling the controller module 70
Completing the replacement process 71
Replacing the NVMEM battery 71
Shutting down the impaired controller 71
Removing the controller module 72
Replacing the NV battery 73
Installing the controller module 74
Running diagnostics 76
Completing the replacement process 76
Replacing the chassis 76
Shutting down the controllers when replacing a chassis 76
Removing the controller modules 77
Moving drives to the new chassis 78
Replacing a chassis from within the equipment rack or system cabinet 79
Installing the controller modules 79
Running diagnostics 80
Completing the replacement process 80

Chapter 5. System level diagnostics 81

Introduction to system-level diagnostics 81
Scan system 81
Test system 84

© Copyright Lenovo 2023

Test example: Run CPU Test 85
Test memory 86
Configure Memory Test Range 87
Memory Test Selection and Loop Count . . . 87
Show VPD information 90
Show FW revision 92
Show MAC address 93
Show logs 94
Show Logs Selection 95
Reboot (BMC power cycle) controller to LOADER 97

Appendix A. Getting help and technical assistance 99
Before you call 99
Collecting service data 100
Contacting Support 100

Appendix B. Notice of Privacy Practices 103

Appendix C. Notices. 105
Trademarks 106
Important notes 106
Particulate contamination 106
ASHRAE class compliance information. 108
Telecommunication regulatory statement 108
Electronic emission notices 108
Taiwan region BSMI RoHS declaration 109
Taiwan Region import and export contact information 109

Index 111

Safety

Before installing this product, read the Safety Information.

قبل تركيب هذا المنتج، يجب قراءة الملاحظات الآمنية

Antes de instalar este produto, leia as Informações de Segurança.

在安装本产品之前，请仔细阅读 Safety Information （安全信息）。

安裝本產品之前，請先閱讀「安全資訊」。

Prije instalacije ovog produkta obavezno pročitajte Sigurnosne Upute.

Před instalací tohoto produktu si přečtěte příručku bezpečnostních instrukcí.

Læs sikkerhedsforskrifterne, før du installerer dette produkt.

Lees voordat u dit product installeert eerst de veiligheidsvoorschriften.

Ennen kuin asennat tämän tuotteen, lue turvaohjeet kohdasta Safety Information.

Avant d'installer ce produit, lisez les consignes de sécurité.

Vor der Installation dieses Produkts die Sicherheitshinweise lesen.

Πριν εγκαταστήσετε το προϊόν αυτό, διαβάστε τις πληροφορίες ασφάλειας
(safety information).

לפני שתתקינו מוצר זה, קראו את הוראות הבטיחות.

A termék telepítése előtt olvassa el a Biztonsági előírásokat!

Prima di installare questo prodotto, leggere le Informazioni sulla Sicurezza.

製品の設置の前に、安全情報をお読みください。

본 제품을 설치하기 전에 안전 정보를 읽으십시오.

Пред да се инсталира овој продукт, прочитајте информацијата за безбедност.

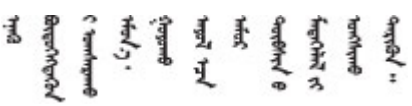

Les sikkerhetsinformasjonen (Safety Information) før du installerer dette produktet.

Przed zainstalowaniem tego produktu, należy zapoznać się
z książką "Informacje dotyczące bezpieczeństwa" (Safety Information).

Antes de instalar este produto, leia as Informações sobre Segurança.

© Copyright Lenovo 2023

Перед установкой продукта прочтите инструкции по технике безопасности.

Pred inštaláciou tohto zariadenia si pečítaje Bezpečnostné predpisy.

Pred namestitvijo tega proizvoda preberite Varnostne informacije.

Antes de instalar este producto, lea la información de seguridad.

Läs säkerhetsinformationen innan du installerar den här produkten.

ཐོན་རྫས་འདི་བདེ་སྤྱོད་མ་བྱས་གོང་། ་སྐོར་གྱི་ཡིད་གཟབ་
བྱ་འདྲ་མིན་ཡོད་པའི་འོད་སྡེར་བལྟ་དགོས།

Bu ürünü kurmadan önce güvenlik bilgilerini okuyun.

مەزكۇر مەھسۇلاتنى ئورنىتىشتىن بۇرۇن بىخەتەرلىك ئۇچۇرلىرىنى ئوقۇپ چىقىڭ.

Youq mwngz yungh canjbinj neix gaxgonq, itdingh aeu doeg aen canjbinj soengq cungj vahgangj ancien siusik.

Chapter 1. Introduction

This chapter provides a brief introduction to your system. This chapter contains information about product specifications, management software, tech tips, and security advisories.

System package contents

When you receive your system, verify that the shipment contains everything that you expected to receive.

The system package includes the following items:

Note: Items marked with asterisk (*) are available on some models only.

- 1 DG5000 unit
- 2 Rail kit*. Detailed instructions for installing the rail kit are provided in the package with the rail kit.
- 3 Material box, including items such as cable management arm*, accessory kit, power cords* and documentation

Specifications

The following information is a summary of the features and specifications of the DG5000 storage unit. Depending on the model, some features might not be available, or some specifications might not apply.

Table 1. Storage specifications

Specification	Description
Dimension	• 2U • Height: 87 mm (3.43 inches) • Width: – With mounting flanges: 483 mm (19.0 inches) – Without mounting flanges: 447 mm (17.6 inches) • Depth: 543 mm (21.38 inches)
Weight	24.6 kg (54.3 lb)
Processor	• Intel 2.1 GHz 12-core processor • One 12-core processors per node • 24 total processor core per system
Power supplies	Two hot-swap power supplies for redundancy support
Memory	• Memory: 64 GB per node, 128 GB in total • NVRAM: 8 GB per node, 16 GB in total • Type: – DDR4-2666, dual-rank, 32 GB ECC RDIMM **Note:** 8 GB of NVRAM used from controller 64 GB memory.

© Copyright Lenovo 2023

Table 1. Storage specifications (continued)

<table>
<tr><th>Specification</th><th>Description</th></tr>
<tr><td>Expansion slots</td><td>• Two PCIe mezzanine slots per node
• Four PCIe mezzanine slots per system
For detailed information, see “Rear view” on page 6.</td></tr>
<tr><td>Input/Output (I/O) features</td><td>Rear panel (per node):
• Two 25 GbE SFP28 connectors(for cluster and HA interconnect)
• Two 10 Gbase-T RJ45 connectors
• One RJ-45 1 GbE management port
• One RJ-45 console port
• One Micro-USB console port
• One USB Type-A connector (Netboot & OS update)</td></tr>
<tr><td>Storage controller adapters</td><td>• 4-port 25Gb Ethernet, SFP28 port
• 2-port 100Gb Ethernet, QSFP28 port
• 4-port 32GB Fiber Channel, SFP+ port</td></tr>
<tr><td>System fans</td><td>• Five hot-swap system fans per node
• System can operate with a single fan failure</td></tr>
<tr><td>Electrical input</td><td>The storage system supports up to two hot-swap power supplies for node for redundancy.
<table><tr><td>Power supply</td><td>100–120 V ac</td><td>200–240 V ac</td></tr><tr><td rowspan="2">1600-watt 80 PLUS Platinum</td><td>(50–60 Hz)</td><td>(50–60 Hz)</td></tr><tr><td>Yes</td><td>Yes</td></tr><tr><td rowspan="2">1600-watt 80 PLUS Titanium</td><td>(50–60 Hz)</td><td>(50–60 Hz)</td></tr><tr><td>Yes</td><td>Yes</td></tr></table></td></tr>
<tr><td>Acoustical noise emissions</td><td>• Sound power: 7.2 bels
• Sound pressure: 69.1 dBA</td></tr>
<tr><td>Environment</td><td>The system is supported in the following environment:
• Air temperature:
– Operating: ASHRAE class A2: 10–35°C (50–95°F)
– Shipping or storage: -40–70°C (-40–158°F)
• Maximum altitude:
– Operating: 3048 m (10000 ft)
– Shipping or storage: 12 192 m (40000 ft)
• Relative humidity (non-condensing):
– Operating: ASHRAE class A2: 8%–80%; maximum dew point: 21°C (70°F)
– Shipping or storage: 10%–95%
Your storage complies with ASHARE class A2 specifications. For detailed information, see “ASHRAE class compliance information” on page 108.</td></tr>
</table>

Management software

ONTAP is available for managing your system. For detailed information about how to use ONTAP, go to: https://thinksystem.lenovofiles.com/storage/help/topic/ontap_software/overview.html

Tech Tips

Lenovo continually updates the support website with the latest tips and techniques that you can use to solve issues that you might have with your system. These Tech Tips (also called retain tips or service bulletins) provide procedures to work around issues related to the operation of your system.

To find the Tech Tips available for your system:

1. Go to http://datacentersupport.lenovo.com and navigate to the support page for your system.
2. Click **How-tos & Solutions**.

   Expand **Symptom** to choose a category for the type is problem that you are having.

Security advisories

Lenovo is committed to developing products and services that adhere to the highest security standards in order to protect our customers and their data. When potential vulnerabilities are reported, it is the responsibility of the Lenovo Product Security Incident Response Team (PSIRT) to investigate and provide information to our customers so they may put mitigation plans in place as we work toward providing solutions.

The list of current advisories is available at the following site:

https://datacentersupport.lenovo.com/product_security/home

Chapter 2. System components

This section provides information to help you locate your DG5000 components.

Front view

The following illustration shows the front view of the DG5000 with the front bezel removed.

Front view without bezel

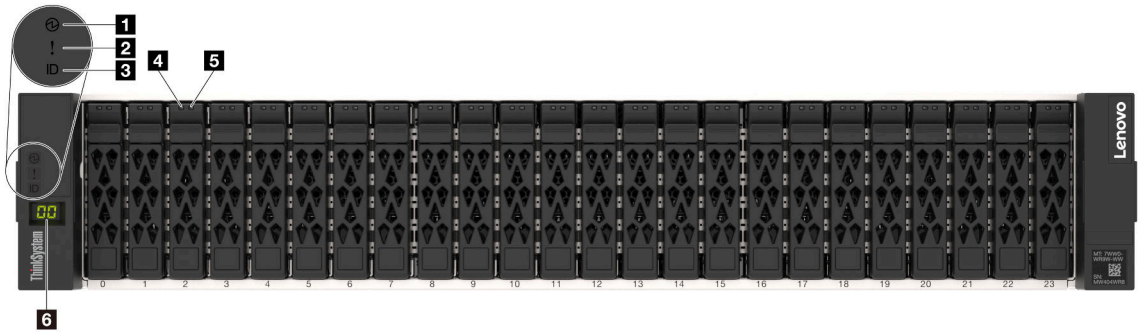

Figure 1. Front view without bezel

1 Chassis power LED	2 System attention LED
3 Location LED	4 Drive activity LED
5 Drive fault LED	6 Shelf ID

1 Chassis power LED

The power status LED helps you to determine the current power status.

Status	Color	Description
Solid on	Green	The system is on and running.
Off	None	No power supply is delivering power to the system.

2 System attention LED

The system attention LED provides basic diagnostic functions for your storage system. If the system attention LED is lit, one or more LEDs elsewhere in the system might also be lit to direct you to the source of the error.

© Copyright Lenovo 2023

Status	Color	Description	Action
On	Yellow	An error has been detected on the system. Causes might include but not limited to the following errors: • A fan failure • A memory error • A storage failure • A PCIe device failure • A power supply failure • A port failure • A system board error	Check the event log to determine the exact cause of the error.
Off	None	The system is off, or the system is on and working correctly.	None.

3 Location LED

The blue system location LED is used to visually locate a system.

4 Drive activity LED

The drive activity LED is used to determine the status of a drive.

Status	Color	Description	Action
On	Green	Drive has power.	None.
Blinking	Green	Drive servicing IO.	None.

5 Drive fault LED

The drive fault LED is used to determine the status of a drive.

Status	Color	Description	Action
On	Amber	An error has occurred with the drive.	Replace the drive.
Blinking	Amber	Drive rebuild action is underway.	None.
Off	None	The drive is working normally.	None.

6 Shelf LED

The shelf ID is used to show the ID number of the shelf. Each shelf in a configuration needs to have a unique ID.

Rear view

The rear view of the storage provides access to the system connectors and components.

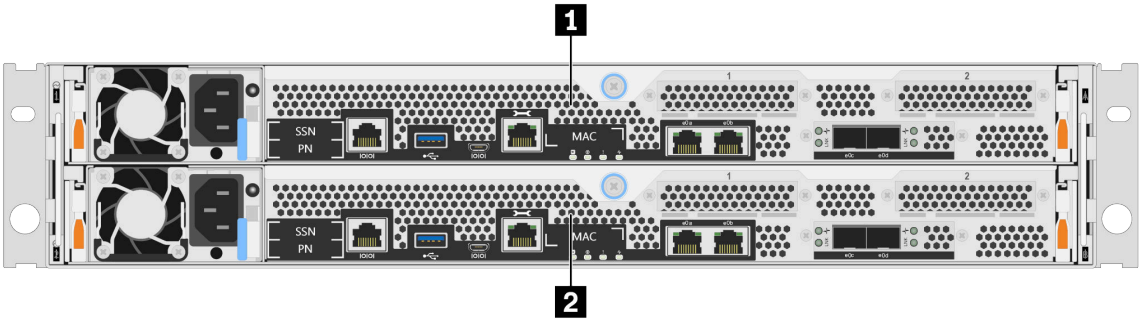

Figure 2. Rear view with dual, high availability, nodes

1 Top controller, node A	2 Bottom controller, node B

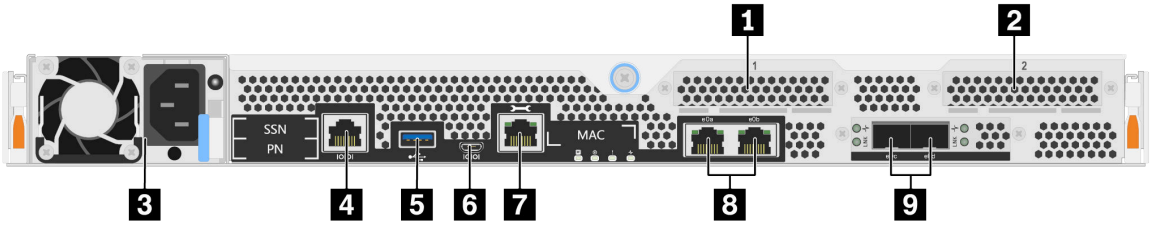

Figure 3. Rear view of controller nodes

1 Host Interface Card slot 1	2 Host Interface Card slot 2
3 Power Supply	4 RJ-45 console port
5 USB Type-A port	6 Micro-USB console port
7 1 GbE RJ-45 management port	8 10 Gbase-T Ethernet RJ45 ports (2)
9 25 GbE SFP28 connectors (2)	

1 2 Host Interface Card (HIC) slots

You can find the Host Interface Card (HIC) slot numbers on the rear of each controller.

3 Power supply

The hot-swap redundant power supplies help you avoid significant interruption to the operation of the system when a power supply fails.

On each power supply, there are multi-color status LEDs near the power cord connector. For information about the status LEDs, see “Rear view LEDs” on page 8.

4 RJ-45 console port

The RJ-45 console port connection provides serial access to the nodes BMC management network device.

5 USB Type-A port

The USB Type-A port is a Read-Only connection that can be used for ONTAP netboot and system updates.

6 Micro-USB console port

The Micro-USB console port connection provides serial access to the nodes BMC management network device.

7 1 GbE RJ-45 management port

The RJ-45 console port connection provides 1 Gb Ethernet connectivity to the node for systems management using the Storage Manager.

8 10 GbE RJ-45 console ports (2)

Each controller includes two 10 Gb Ethernet ports that are used for host I/O connectivity.

9 25 GbE SFP28 connectors (2)

Each controller includes two 25 Gb Ethernet ports that are used to provide node-to-node clustering or switch node clustering on a DG5000.

Rear view LEDs

The illustration in this section shows the LEDs on the rear of the storage unit.

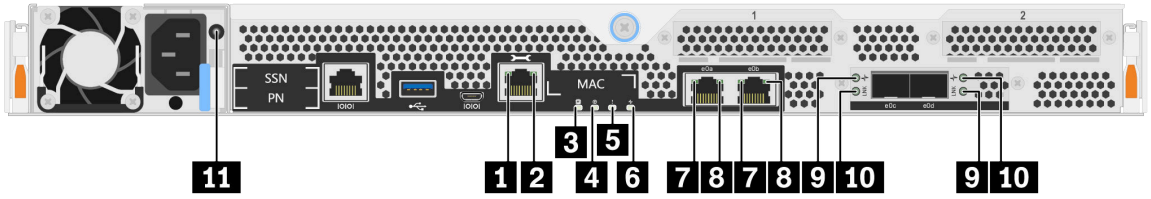

Figure 4. Rear view LEDs

Table 2. LEDs on the rear of the system

1 RJ45 management port link LED	2 RJ45 management port link LED
3 NVMEM discharge LED	4 Controller location LED
5 Controller attention LED	6 Controller activity LED
7 10 GbE port link LEDs (2)	8 10 GbE port activity LEDs (2)
9 25 GbE port link LEDs (2)	10 25 GbE port attention LEDs (2)
11 Power supply LED	

1 2 RJ45 management port status LEDs

The RJ45 management port is a 1Gb Ethernet port that has two status LEDs.

Status LED	Status	Color	Description
1 RJ45 management port link LED	On	Green	A link is established between the port and some upstream device.
	Off	None	No link is established.
2 RJ45 management port activity LED	Blinking	Green	Traffic is flowing over the connection.
	Off	None	No traffic is flowing over the connection.

3 NVMEM discharge LED

The NVMEM discharge LED provides the status of ONTAP running on the controller.

Status	Color	Description
Blinking	Green	NVMEM destage events are occurring.
Solid	Green	NVMEM destage events completed successfully.
Off	None	The system is running normally and the NVMEM is ready if ONTAP is running.

4 Controller location LED

The controller location LED is a blue LED that helps to show the location of a specific controller in a system.

5 Controller attention LED

The controller attention LED indicates that there is an issue with a controller. Check other LEDs and event logs to determine the cause of the issue.

Status	Color	Description
On	Amber	The controller has a fault.
Off	None	The controller is operating normally.

6 Controller activity LED

The controller activity LED provides the status of ONTAP running on the controller.

Status	Color	Description
Blinking	Green	The controller is running ONTAP. The length of time the light remains on is proportional to the controller activity.
Off	None	ONTAP is not running on the controller.

7 8 10 Gb Ethernet RJ45 port status LEDs

The Ethernet port has two status LEDs.

Status LED	Status	Color	Description
7 10 GbE port link LEDs (2)	On	Green	A connection is established between the port and some upstream devices.
	Off	None	No connection is established on the port.
8 10 GbE port activity LEDs (2)	Blinking	Green	Traffic is flowing over the connection.
	Off	None	No traffic is flowing over the connection.

9 10 25 Gb Ethernet port status LEDs

The Ethernet port has two status LEDs.

Status LED	Status	Color	Description
9 25 GbE port link LEDs (2)	On	Green	A connection is established on the port.
	Off	None	No connection is established on the port.

Status LED	Status	Color	Description
10 25 GbE port attention LEDs (2)	On	Amber	The port requires attention.
	Off	None	The port operates normally.

11 Power supply LED

The power supply has a multi-color status LED.

Status	Color	Description
On	Green	The power supply is connected to the AC power source.
	Red	The power supply is failed or the AC power source is removed.
Off	None	The system is off.

PCIe slots

The DG5000 supports two (2) x16 PCIe mezzanine host interface cards (HIC) per controller. These slots are used to add extra adapters for host, storage, or cluster connectivity. The tables below show the supported adapters, the max number supported per controller and the adapter slot priority.

Host interface card support

Name	Option PN	Feature Code	Plug Type	Supported Protocol(s)	Per Controller	Slot Priority
Host Interface						
HIC, 10/25Gb iSCSI,4-ports	4C57A67132	BEVQ	SFP28	Ethernet 10/25Gb	2	2,1
HIC, 16/32Gb FC,4-ports	4C57A67133	BEVP	SFP+	Fibre Channel 8/16/32 Gb NVMe/FC 8/16/32 Gb	2	2,1
Expansion						
HIC, 2x100Gb NVMe-RoCE,2-ports[1]	4C57A67134	BEVR	QSFP28	Ethernet 100Gb	1	1

[1]: Used with DM240N expansion, restricted to 100 GbE only.

Chapter 3. System installation and setup

Quick guide

This guide gives graphic instructions for a typical installation of your system from racking and cabling, through initial system bring-up. Use this guide if you are familiar with installing Lenovo systems.

Access the *Installation and Setup Instructions* PDF poster: DG5000 Systems Installation and Setup Instructions

Detailed guide

This guide gives detailed step-by-step instructions for installing a typical Lenovo system. Use this guide if you want more detailed installation instructions.

Preparing for installation

To install your DG5000 system, you need to create an account and register the system. You also need to inventory the appropriate number and type of cables for your system and collect specific network information.

You need to have access to the Lenovo Press for information about site requirements as well as additional information on your configured system.

Lenovo Press

Attention: Customers with specific power requirements must check Lenovo Press for their configuration options.

You need to provide the following at your site:

- Rack space for the storage system
- Phillips #2 screwdriver
- Additional networking cables to connect your system to your network switch and laptop or console with a Web browser

Step 1. Unpack the contents of all boxes.

Step 2. Record the system serial number from the controllers.

Step 3. Set up your account:

a. Log in to your existing account or create an account. Lenovo Support Registration

b. Register your system. Lenovo Product Registration

Step 4. Inventory and make a note of the number and types of cables you received.The following table identifies the types of cables you might receive. If you receive a cable not listed in the table, see Lenovo Press to locate the cable and identify its use.

Lenovo Press

© Copyright Lenovo 2023

Type of cable	Part number and length	Connector type	For...
25 GbE cable (SFP28)	7Z57A03557, 1m 7Z57A03558, 3m 7Z57A03559, 5m		Cluster interconnect/HA and Ethernet data (order-dependent)
100 GbE cable (QSFP28)	7Z57A03561, 1m 7Z57A03562, 3m 7Z57A03563, 5m		Storage (order-dependent)
Optical cables	4Z57A10845, .5M LC-LC OM4 4Z57A10846, 1M LC-LC OM4 4Z57A10847, 3M LC-LC OM4 4Z57A10848, 5M LC-LC OM4 4Z57A10849, 10M LC-LC OM4 4Z57A10850, 15M LC-LC OM4		Fiber channel or Ethernet data (order-dependent)
RJ-45 (order dependant)	Various		Management and Ethernet network
Micro-USB console cable	Not applicable		Console connection during software setup
Power cables	Various		Powering up the system

Step 5. Review the *DG5000 Installation and Setup Instructions* or *Cluster Management Using Storage Manager* and collect the required information listed in that guide.

DG5000 Installation and Setup Instructions

Cluster Management Using ThinkSystem Storage Manager

Installing the hardware

You need to install your system in a 4-post rack or Lenovo system cabinet, as applicable.

Step 1. Install the rail kits, as needed.

Step 2. Install and secure your system using the instructions included with the rail kit.

Note: You need to be aware of the safety concerns associated with the weight of the system.

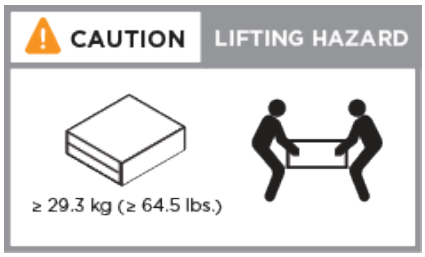

Step 3. Identify and manage cables because this system does not have a cable management device.

Step 4. Place the bezel on the front of the system.

Cabling controllers

There is required cabling for your platform's cluster using the two-node switchless cluster method or the cluster interconnect network method. There is optional cabling to the Fibre Channel or iSCSI host networks or direct-attached storage. This cabling is not exclusive; you can have cabling to a host network and storage.

Cabling controllers to a cluster

You can cable the controllers to a cluster by using the two-node switchless cluster method or by using the cluster interconnect network.

Cabling a two node switchless cluster

The management, Fibre Channel, and data or host network ports on the controller modules are connected to switches. The cluster interconnect ports are cabled on both controller modules.

You must have contacted your network administrator for information about connecting the system to the switches.

Be sure to check the illustration arrow for the proper cable connector pull-tab orientation.

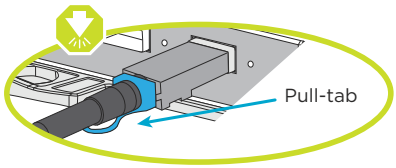

Note: As you insert the connector, you should feel it click into place; if you do not feel it click, remove it, turn it around and try again.

Step 1. Use the step-by-step instructions to complete the cabling between the controllers and to the switches:

Step	Perform on each controller
1	Cable the cluster interconnect ports to each other with the 25GbE cluster interconnect cable : • e0c to e0c • e0d to e0d 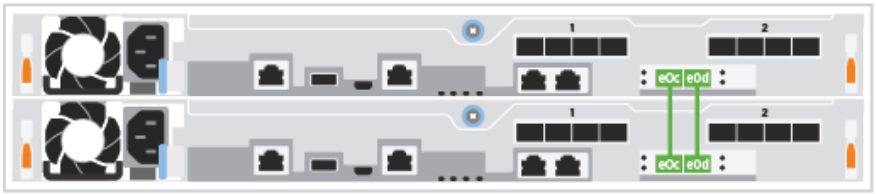
2	Cable ports 1a through 1d to data or host network switches: 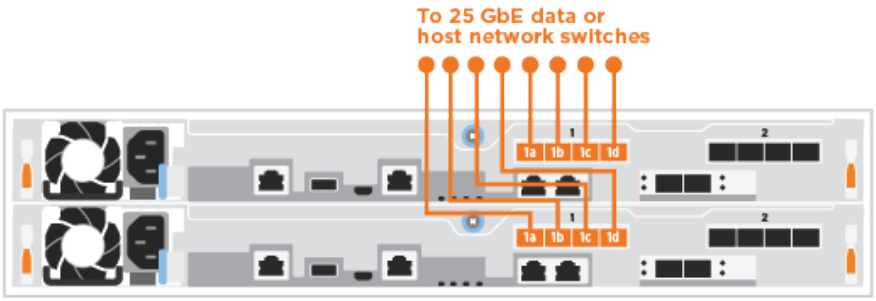
3	Cable ports 2a through 2d to the FC host network switches: 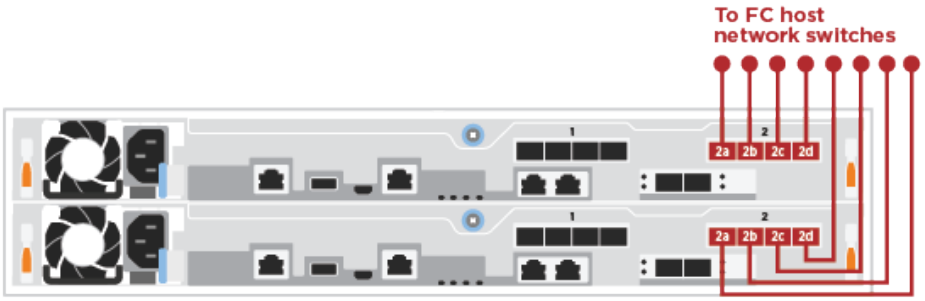

Step	Perform on each controller
4	Cable the wrench ports to the management network switches with the RJ45 cables. 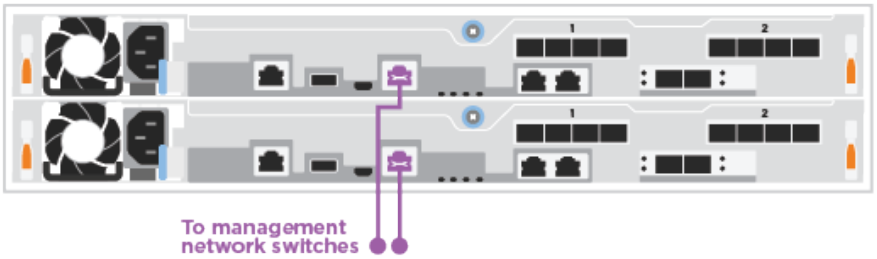
!	DO NOT plug in the power cords at this point.

Step 2. To complete setting up your system, see “Completing system setup and configuration” on page 20

Cabling a switched cluster

All ports on the controllers are connected to switches; cluster interconnect, management, Fibre Channel, and data or host network switches.

You must have contacted your network administrator for information about connecting the system to the switches.

Be sure to check the illustration arrow for the proper cable connector pull-tab orientation.

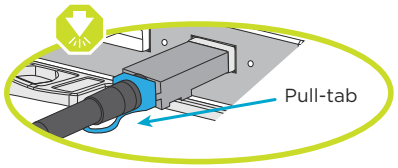

Note: As you insert the connector, you should feel it click into place; if you do not feel it click, remove it, turn it around and try again.

Step 1. Use the step-by step instructions to complete the cabling between the controllers and to the switches:

Step	Perform on each controller
1	Cable the cluster interconnect ports to the 25 GbE cluster interconnect switches. • e0c • e0d 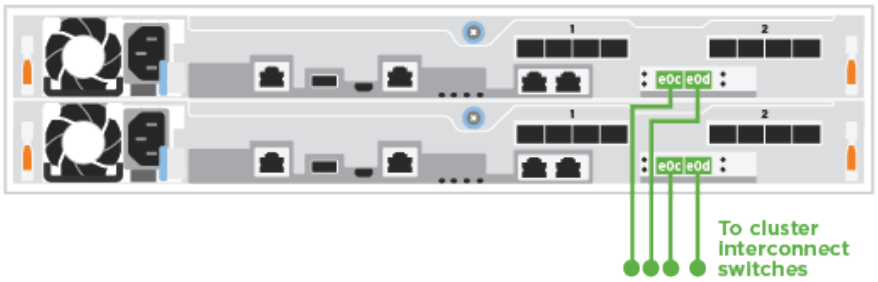
2	Cable ports 1a through 1d to data or host network switches: 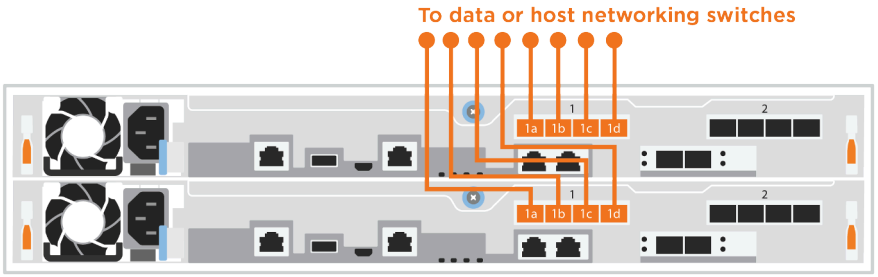
3	Cable ports 2a through 2d to the FC host network switches: 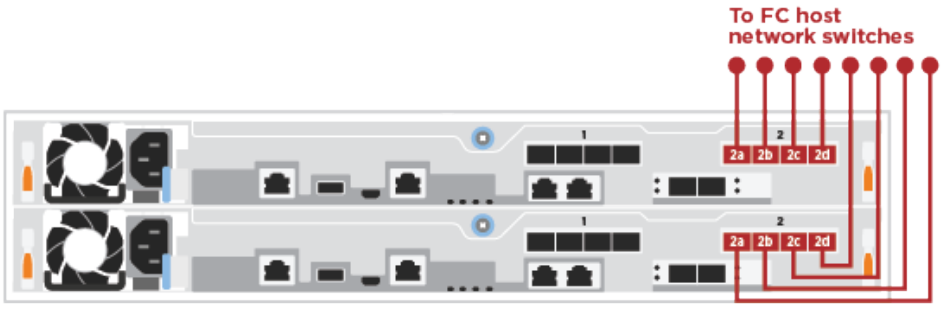

Step	Perform on each controller
4	Cable the wrench ports to the management network switches with the RJ45 cables. 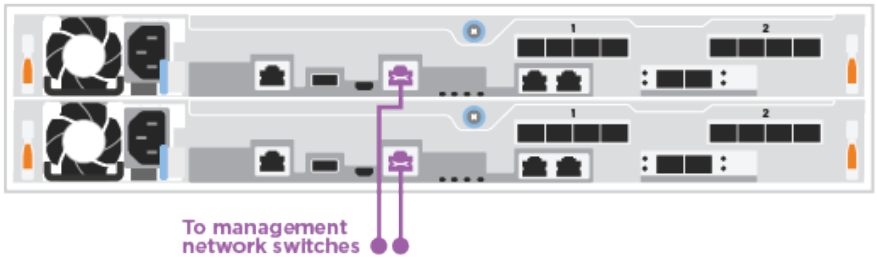
!	DO NOT plug in the power cords at this point.

Step 2. To complete setting up your system, see “Completing system setup and configuration” on page 20.

Cabling configuration-dependant options

You have configuration-dependant optional cabling to the Fibre Channel or iSCSI host networks or direct-attached storage. This cabling is not exclusive; you can have cabling to a host network and storage.

Cabling to a Fibre Channel host network

Fibre Channel ports on the controllers are connected to Fibre Channel host network switches.

You must have contacted your network administrator for information about connecting the system to the switches.

Be sure to check the illustration arrow for the proper cable connector pull-tab orientation.

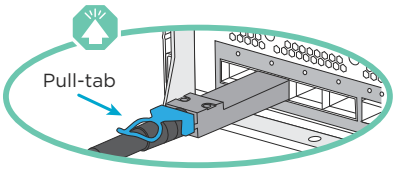

Note: As you insert the connector, you should feel it click into place; if you do not feel it click, remove it, turn it around and try again.

Step	Perform on each controller module
1	Cable ports 2a through 2d to the FC host switches. 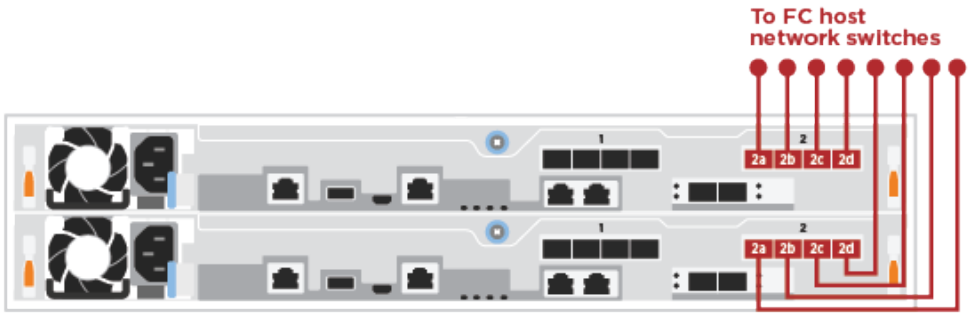
2	To perform other optional cabling, choose from: • “Cabling to a 25GbE data or host network” on page 18 • “Cabling the controllers to a single drive shelf” on page 19
3	To complete setting up your system, see “Completing system setup and configuration” on page 20.

Cabling to a 25GbE data or host network

25GbE ports on the controllers are connected to 25GbE data or host network switches.

You must have contacted your network administrator for information about connecting the system to the switches.

Be sure to check the illustration arrow for the proper cable connector pull-tab orientation.

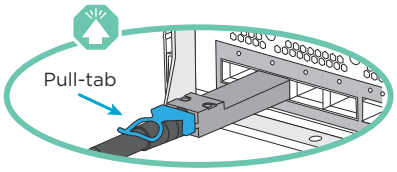

Note: As you insert the connector, you should feel it click into place; if you do not feel it click, remove it, turn it around and try again.

Step	Perform on each controller module
1	Cable ports e1a through e1d to the 10GbE host network switches. 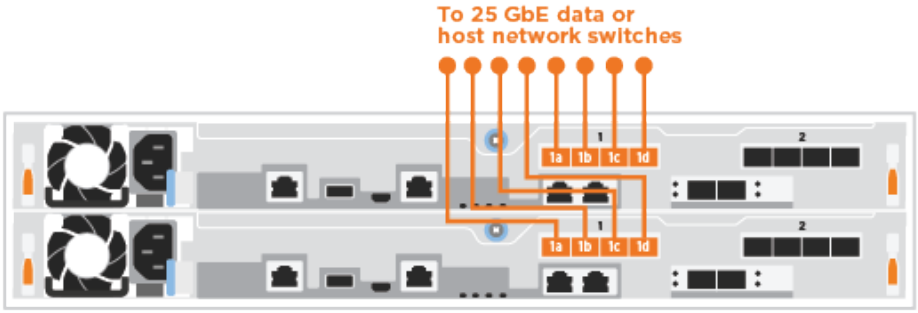
2	To perform other optional cabling, choose from: • “Cabling to a Fibre Channel host network” on page 17 • “Cabling the controllers to a single drive shelf” on page 19
3	To complete setting up your system, see “Completing system setup and configuration” on page 20.

Cabling the controllers to a single drive shelf

You must cable each controller to the NSM modules on the DM240N drive shelf.

Be sure to check the illustration arrow for the proper cable connector pull-tab orientation.

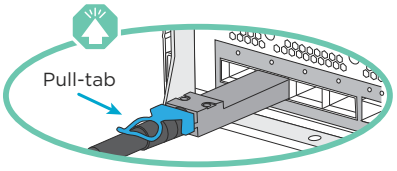

Note: As you insert the connector, you should feel it click into place; if you do not feel it click, remove it, turn it around and try again.

Step 1. You can use the step-by-step instructions to cable your controller modules to a single shelf.

1. Cable e1a on controller 1 to the e0a on NSM A on the DM240N.
2. Cable e1b on controller 1 to the e0b on NSM B on the DM240N.
3. Cable e1a on controller 2 to the e0a on NSM B on the DM240N.
4. Cable e1b on controller 2 to the e0b on NSM A on the DM240N.

Step	Perform on each controller module
1	Cable controller A to the shelf 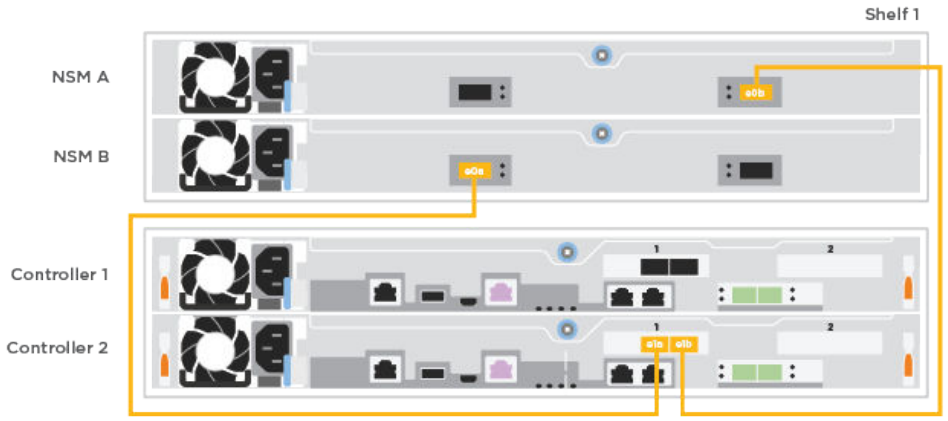
2	Cable controller B to the shelf: 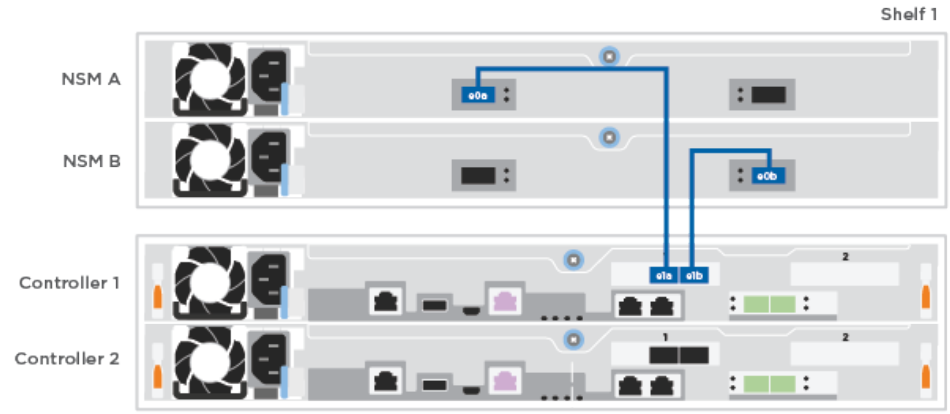

Step 2. To complete setting up your system, see “Completing system setup and configuration” on page 20.

Completing system setup and configuration

You can complete the system setup and configuration using cluster discovery with only a connection to the switch and laptop, or by connecting directly to a controller in the system and then connecting to the management switch.

Completing system setup using the console port

This section will describe how to complete the system setup using the console port for your system.

Step 1. Cable and configure your laptop or console:

a. Set the console port on the laptop or console to 115,200 baud with N-8-1.

Note: See your laptop or console's online help for how to configure the console port.

b. Connect the console cable to the laptop or console using the console cable that came with your system, and then connect the laptop to the management switch on the management subnet .

c. Assign a TCP/IP address to the laptop or console, using one that is on the management subnet.

Step 2. Plug the power cords into the controller power supplies, and then connect them to power sources on different circuits.The system begins to boot. Initial booting may take up to eight minutes

Step 3. Assign an initial node management IP address to one of the nodes.

If the management network has DHCP...	Then...
Configured	Record the IP address assigned to the new controllers.
Not configured	1. Open a console session using PuTTY, a terminal server, or the equivalent for your environment. **Note:** Check your laptop or console's online help if you do not know how to configure PuTTY. 2. Enter the management IP address when prompted by the script.

Step 4. Use Storage Manager on your laptop or console, configure your cluster:

a. Point your browser to the node management IP address.

Note: The format for the address is `https://x.x.x.x`.

b. Configure the system using the data you collected by referring to *DG5000 Installation and Setup Instructions* or *Cluster Management Using Storage Manager*.

DG5000 Installation and Setup Instructions

Cluster Management Using ThinkSystem Storage Manager

Step 5. After you have completed the initial configuration, go to Resources for ONTAP and ThinkSystem Storage Manager for information about configuring additional features in ONTAP.

Chapter 4. Hardware replacement procedures

Replacing a power supply

Replacing a power supply

Replacing a power supply involves disconnecting the target power supply (PSU) from the power source, unplugging the power cable, removing the old PSU and installing the replacement PSU, and then reconnecting it to the power source.

- The power supplies are redundant and hot-swappable.
- This procedure is written for replacing one power supply at a time.

  Note: It is a best practice to replace the power supply when a replacement power supply is available. The power supply should be replaced within two minutes of removing it from the chassis or the system will shut down. The system continues to function with a failed power supply installed, but ONTAP sends messages to the console about the degraded power supply unit until the power supply is replaced.
- Power supplies are auto-ranging.

A video for this task is available at:

- YouTube: https://www.youtube.com/playlist?list=PLYV5R7hVcs-C8THdP1nmPF25RWwGRta3v

Step 1. If you are not already grounded, properly ground yourself.

Step 2. Identify the power supply you want to replace, based on console error messages or through the red Fault LED on the power supply.

Step 3. Disconnect the power supply:

   a. Open the power cable retainer, and then unplug the power cable from the power supply.

   b. Unplug the power cable from the power source.

Step 4. Rotate the cam handle such that it can be used to pull power supply out of the controller module while pressing the locking tab.

CAUTION:
The power supply is short. Always use two hands to support it when removing it from the controller module so that it does not suddenly swing free from the controller module and injure you.

© Copyright Lenovo 2023

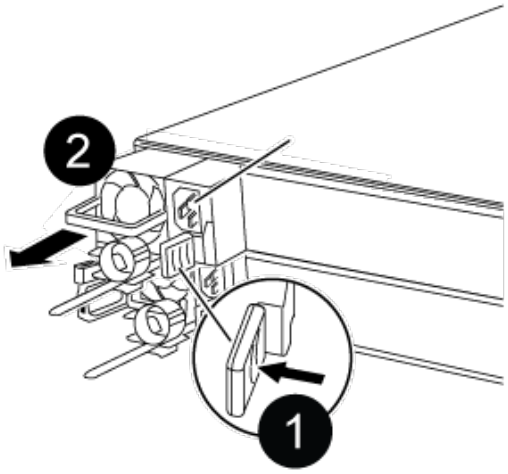

1	Blue power supply locking tab
2	Power supply

Step 5. Using both hands, support and align the edges of the power supply with the opening in the controller module, and then gently push the power supply into the controller module until the locking tab clicks into place. The power supplies will only properly engage with the internal connector and lock in place one way.

Attention: To avoid damaging the internal connector, do not use excessive force when sliding the power supply into the system.

Step 6. Reconnect the power supply cabling:

a. Reconnect the power cable to the power supply and the power source.

b. Secure the power cable to the power supply using the power cable retainer.

Once power is restored to the power supply, the status LED should be green.

Completing the replacement process

After you replace the part, you can return the failed part to Lenovo, as described in the RMA instructions shipped with the kit.Contact technical support at Lenovo Data Center Support if you need the RMA number or additional help with the replacement procedure.

Step 1. Recable the system storage and networking cables, as needed.

Step 2. Reconnect the power supply.

a. Open the power cable retainer and plug the power cable into the power supply.

b. Plug the power cable into the power source.

Step 3. Return the node to normal operation by giving back its storage from the running node: `storage failover giveback -ofnode impaired_node_name`

Note: This operation need to be performed when the impaired node shows "`Waiting for giveback...`".

Step 4. If automatic giveback was disabled, reenable it: `storage failover modify -node local -auto-giveback true`

Replacing a fan

Shutting down the impaired node

To shut down the impaired node, you must determine the status of the node and, if necessary, take over the node so that the healthy node continues to serve data from the impaired node storage.

- If you have a cluster with more than two nodes, it must be in quorum. If the cluster is not in quorum or a healthy node shows false for eligibility and health, you must correct the issue before shutting down the impaired node.

  ONTAP System Administration Reference

Step 1. If the impaired node is part of an HA pair, disable automatic giveback from the console of the healthy node: `storage failover modify -node local -auto-giveback false`

Step 2. Take the impaired node to the LOADER prompt:

If the impaired node is displaying...	Then...
The LOADER prompt	Go to the next step.
`Waiting for giveback...`	Press Ctrl-C, and then respond `y`.
System prompt or password prompt (enter system password)	Take over or halt the impaired node: `storage failover takeover -ofnode` *impaired_node_name* When the impaired node shows `Waiting for giveback...`, press Ctrl-C, and then respond `y`.

Removing the controller module

You must remove the controller module from the chassis when you replace a component inside the controller module.

Make sure that you label the cables so that you know where they came from.

A video for this task is available at:

- YouTube: https://www.youtube.com/playlist?list=PLYV5R7hVcs-C8THdP1nmPF25RWwGRta3v

Step 1. If you are not already grounded, properly ground yourself.

Step 2. Unplug the controller module power supplies from the source.

Step 3. Release the power cable retainers, and then unplug the cables from the power supplies.

Step 4. Remove the storage and networking cables.

Step 5. Insert your forefinger into the latching mechanism on either side of the controller module, press the lever with your thumb, and gently pull the controller a few inches out of the chassis.

Note: If you have difficulty removing the controller module, place your index fingers through the finger holes from the inside (by crossing your arms)

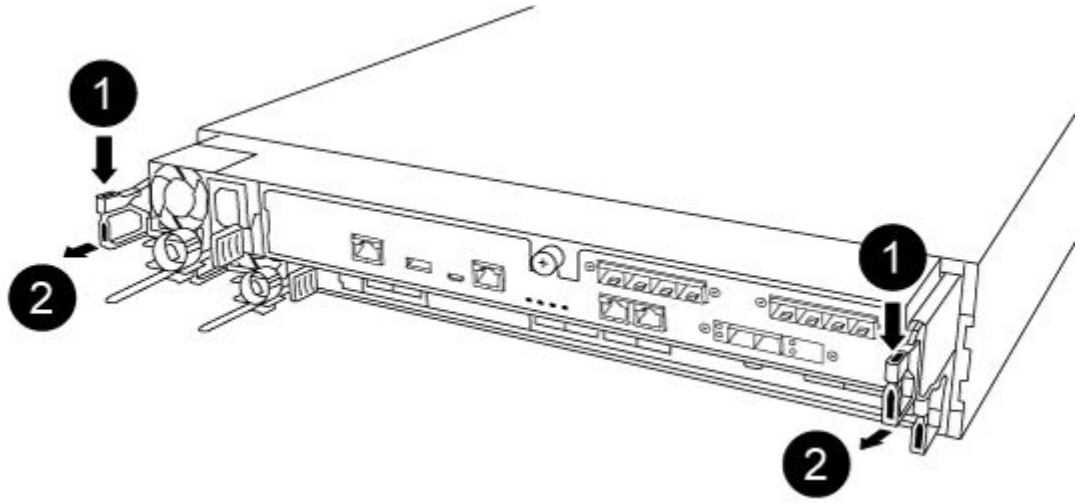

1	Lever
2	Latching mechanism

Step 6. Using both hands, grasp the controller module sides and gently pull it out of the chassis and set it on a flat, stable surface.

Step 7. Turn the thumbscrew on the front of the controller module anti-clockwise and open the controller

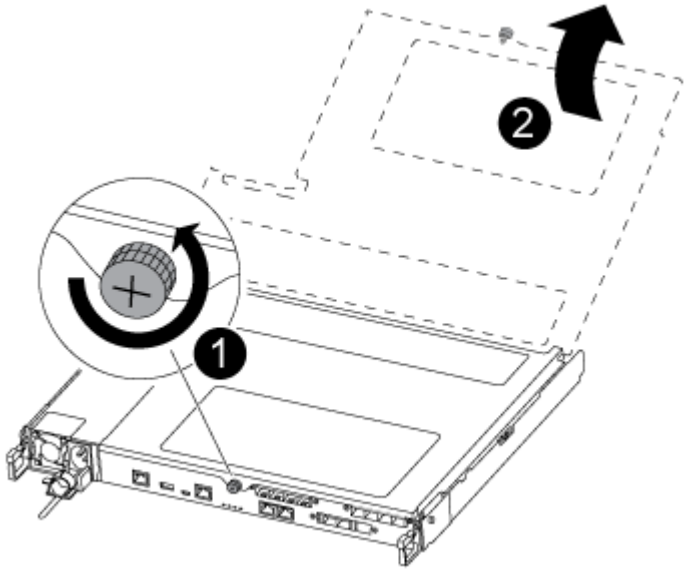

module cover.

1	Thumbscrew
2	Controller module cover

Replacing a fan

To replace a fan, remove the failed fan module and replace it with a new fan module.

A video for this task is available at:

- YouTube: https://www.youtube.com/playlist?list=PLYV5R7hVcs-C8THdP1nmPF25RWwGRta3v

Step 1. Identify the fan module that you must replace by checking the console error messages or by locating the lit LED for the fan module on the motherboard.

Step 2. Remove the fan module by pinching the locking tabs on the side of the fan module, and then lifting the fan module straight out of the controller module.

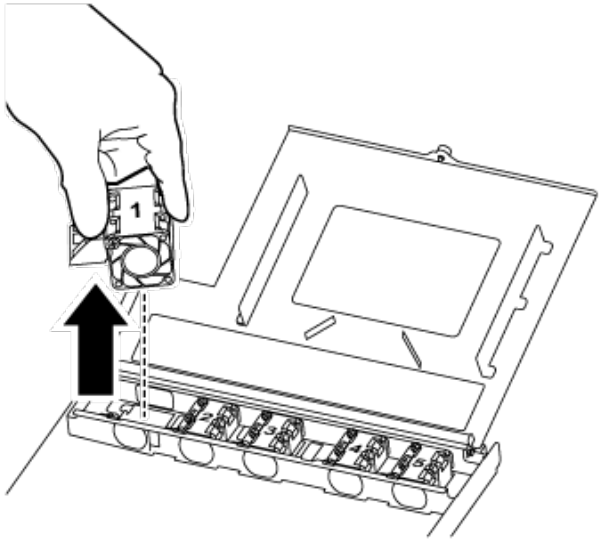

1	Fan locking tabs
2	Fan module

Step 3. Align the edges of the replacement fan module with the opening in the controller module, and then slide the replacement fan module into the controller module until the locking latches click into place.

Reinstalling the controller module

After you replace a component within the controller module, you must reinstall the controller module in the system chassis and boot it.

A video for this task is available at:

- YouTube: https://www.youtube.com/playlist?list=PLYV5R7hVcs-C8THdP1nmPF25RWwGRta3v

Step 1. Close the controller module cover and tighten the thumbscrew.

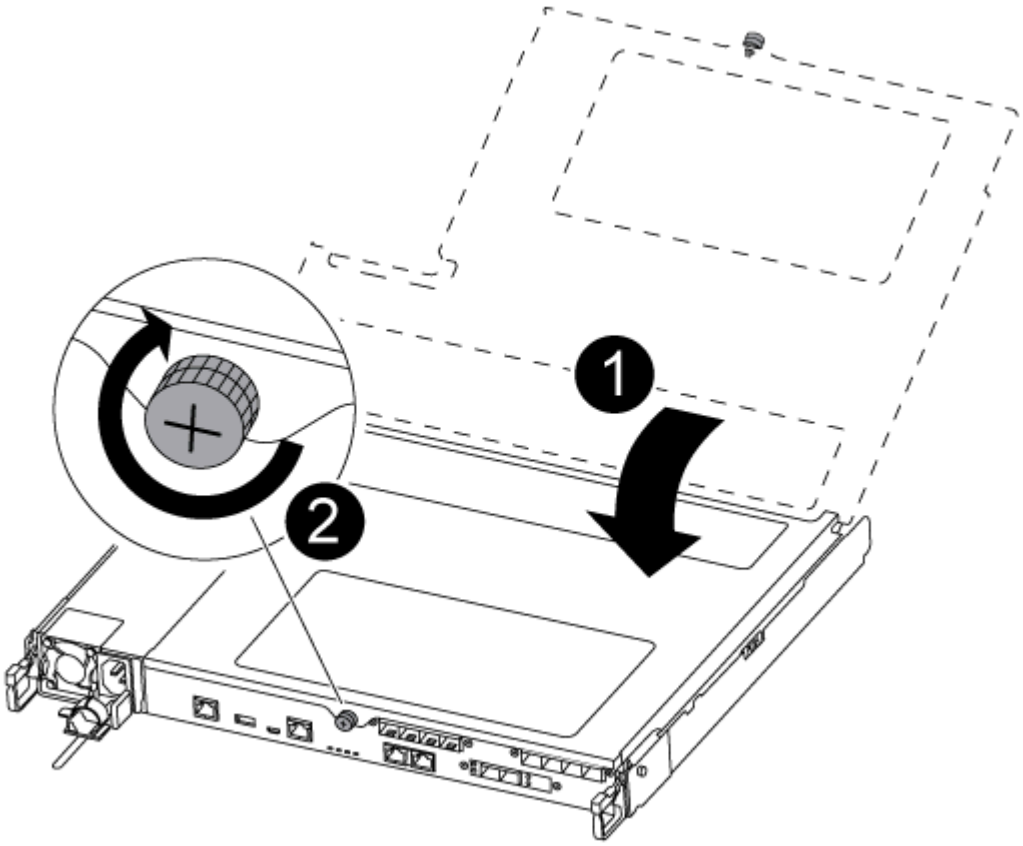

1	Controller module cover
2	Thumbscrew

Step 2. Insert the controller module into the chassis:

a. Ensure the latching mechanism arms are locked in the fully extended position.

b. Using both hands, align and gently slide the controller module into the latching mechanism arms until it stops.

c. Cross your arms and place your index fingers through the finger holes from the inside of the latching mechanism.

d. Press your thumbs down on the orange tabs on top of the latching mechanism and gently push the controller module over the stop.

e. Release your thumbs from the top of the latching mechanisms and continue pushing until the latching mechanisms snap into place.
The controller module begins to boot as soon as it is fully seated in the chassis. Be prepared to interrupt the boot process.

The controller module should be fully inserted and flush with the edges of the chassis.

Step 3. Recable the system, as needed.

Step 4. Return the node to normal operation by giving back its storage from the running node: `storage failover giveback -ofnode` *impaired_node_name*

Note: This should be done when the impaired node shows "Waiting for giveback..."

Step 5. If automatic giveback was disabled, reenable it: `storage failover modify -node local -auto-giveback true`

Completing the replacement process

After you replace the part, you can return the failed part to Lenovo, as described in the RMA instructions shipped with the kit.Contact technical support at Lenovo Data Center Support if you need the RMA number or additional help with the replacement procedure.

Step 1. Recable the system storage and networking cables, as needed.

Step 2. Reconnect the power supply.

a. Open the power cable retainer and plug the power cable into the power supply.

b. Plug the power cable into the power source.

Step 3. Return the node to normal operation by giving back its storage from the running node: `storage failover giveback -ofnode impaired_node_name`

Note: This operation need to be performed when the impaired node shows `"Waiting for giveback..."`.

Step 4. If automatic giveback was disabled, reenable it: `storage failover modify -node local -auto-giveback true`

Replacing the controller module

You must review the prerequisites for the replacement procedure and select the correct one for your version of the ONTAP operating system.

- All drive shelves must be working properly.
- If your system is in a MetroCluster configuration, you must review the section "Choosing the correct recovery procedure" in the *MetroCluster Management and Disaster Recovery Guide* to determine whether you should use this procedure.

  ONTAP 9 MetroCluster Management and Disaster Recovery Guide

- You must replace the failed component with a replacement FRU component you received from your provider.
- You must be replacing a controller module with a controller module of the same model type. You cannot upgrade your system by just replacing the controller module.
- You cannot change any drives or drive shelves as part of this procedure.
- In this procedure, the boot device is moved from the impaired node to the replacement node so that the replacement node will boot up in the same version of ONTAP as the old controller module.
- It is important that you apply the commands in these steps on the correct systems:
  - The *impaired* node is the node that is being replaced.
  - The *replacement* node is the new node that is replacing the impaired node.
  - The *healthy* node is the surviving node.
- You must always capture the node's console output to a text file.

  This provides you a record of the procedure so that you can troubleshoot any issues that you might encounter during the replacement process.

Shutting down the impaired controller

You can shut down or take over the impaired controller using different procedures, depending on the storage system hardware configuration.

Shutting down the impaired node

To shut down the impaired node, you must determine the status of the node and, if necessary, take over the node so that the healthy node continues to serve data from the impaired node storage.

- If you have a cluster with more than two nodes, it must be in quorum. If the cluster is not in quorum or a healthy node shows false for eligibility and health, you must correct the issue before shutting down the impaired node.

  ONTAP System Administration Reference

Step 1. If the impaired node is part of an HA pair, disable automatic giveback from the console of the healthy node: `storage failover modify -node local -auto-giveback false`

Step 2. Take the impaired node to the LOADER prompt:

If the impaired node is displaying...	Then...
The LOADER prompt	Go to the next step.
`Waiting for giveback...`	Press Ctrl-C, and then respond `y`.
System prompt or password prompt (enter system password)	Take over or halt the impaired node: `storage failover takeover -ofnode` *impaired_node_name* When the impaired node shows `Waiting for giveback...`, press Ctrl-C, and then respond `y`.

Replacing the controller module hardware

To replace the controller module hardware, you must remove the impaired node, move FRU components to the replacement controller module, install the replacement controller module in the chassis, and then boot the system to Maintenance mode.

Removing the controller module

You must remove the controller module from the chassis when you replace a component inside the controller module.

Make sure that you label the cables so that you know where they came from.

A video for this task is available at:

- YouTube: https://www.youtube.com/playlist?list=PLYV5R7hVcs-C8THdP1nmPF25RWwGRta3v

Step 1. If you are not already grounded, properly ground yourself.

Step 2. Unplug the controller module power supplies from the source.

Step 3. Release the power cable retainers, and then unplug the cables from the power supplies.

Step 4. Remove the storage and networking cables.

Step 5. Insert your forefinger into the latching mechanism on either side of the controller module, press the lever with your thumb, and gently pull the controller a few inches out of the chassis.

Note: If you have difficulty removing the controller module, place your index fingers through the finger holes from the inside (by crossing your arms)

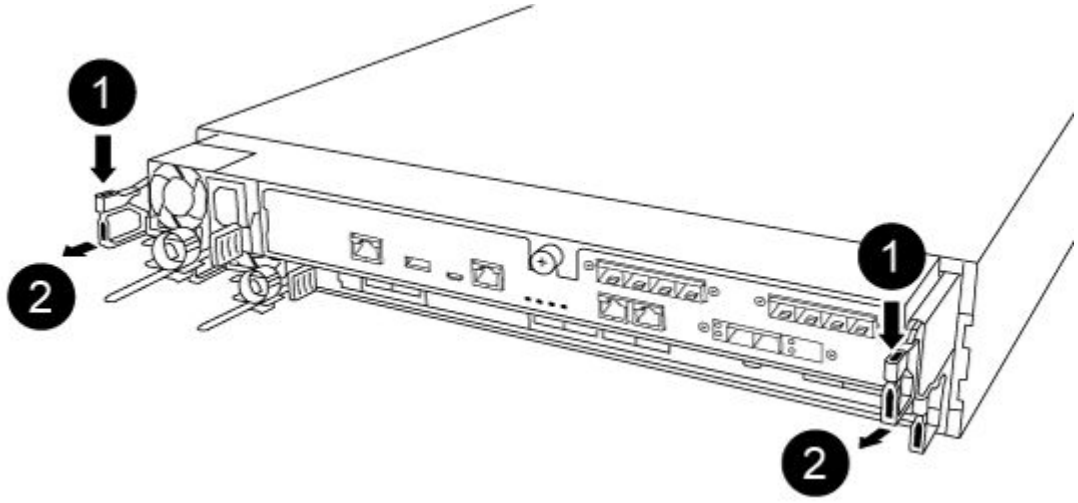

1	Lever
2	Latching mechanism

Step 6. Using both hands, grasp the controller module sides and gently pull it out of the chassis and set it on a flat, stable surface.

Step 7. Turn the thumbscrew on the front of the controller module anti-clockwise and open the controller module cover.

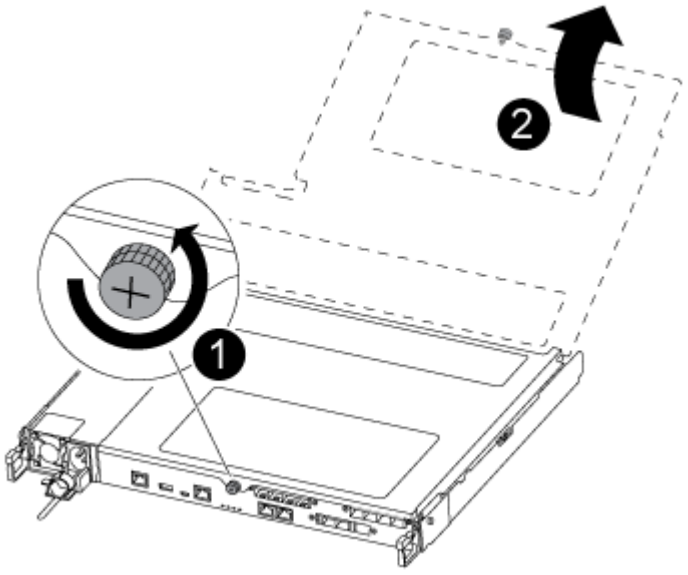

1	Thumbscrew
2	Controller module cover

Step 8. Lift out the air duct cover.

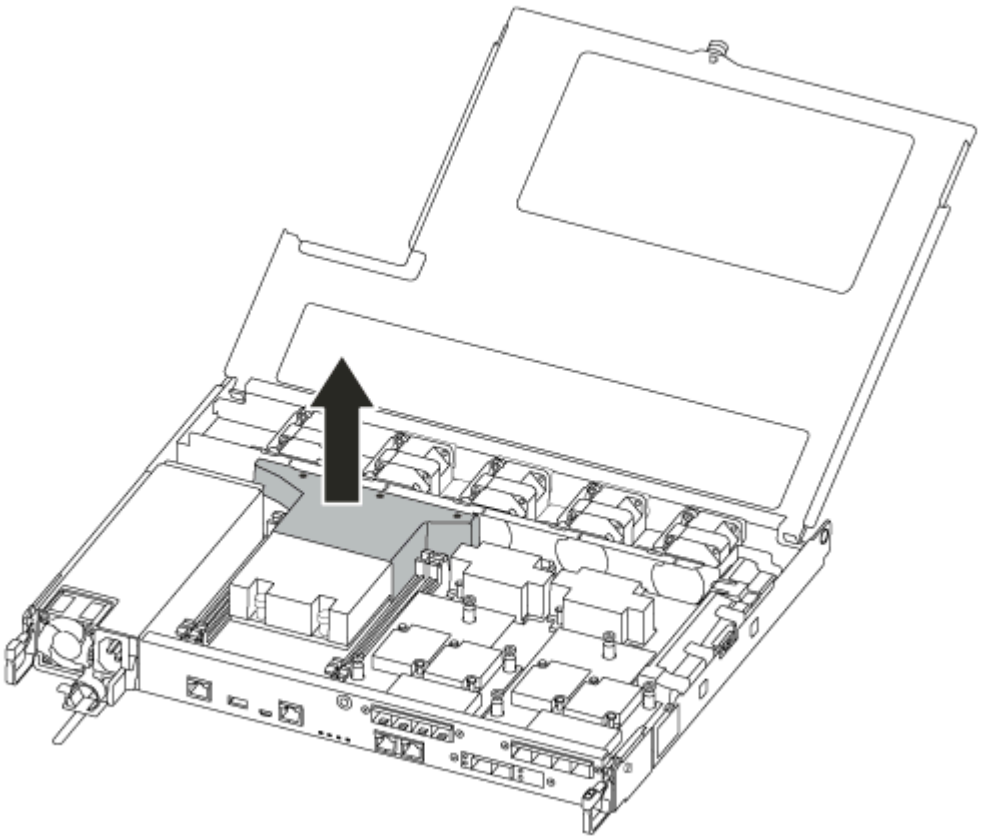

Moving the power supplies

You must move the power supplies from the impaired controller module to the replacement controller module when you replace a controller module.

A video for this task is available at:

- YouTube: https://www.youtube.com/playlist?list=PLYV5R7hVcs-C8THdP1nmPF25RWwGRta3v

Step 1. Rotate the cam handle such that it can be used to pull power supply out of the controller module while pressing the locking tab.

CAUTION:
The power supply is short. Always use two hands to support it when removing it from the controller module so that it does not suddenly swing free from the controller module and injure you.

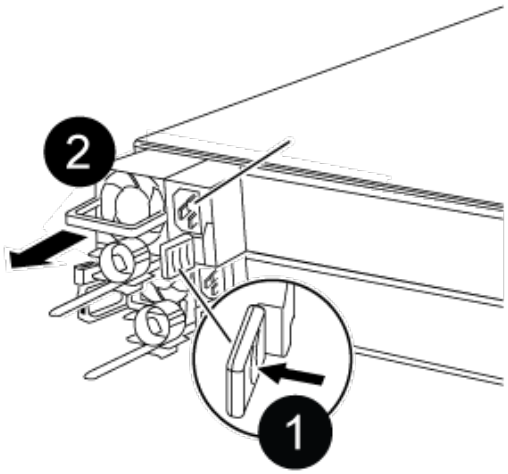

1	Blue power supply locking tab
2	Power supply

Step 2. Move the power supply to the new controller module, and then install it.

Step 3. Using both hands, support and align the edges of the power supply with the opening in the controller module, and then gently push the power supply into the controller module until the locking tab clicks into place. The power supplies will only properly engage with the internal connector and lock in place one way.

Attention: To avoid damaging the internal connector, do not use excessive force when sliding the power supply into the system.

Step 4. Repeat the preceding steps for any remaining power supplies.

Moving the fans

You must move the fans from the impaired controller module to the replacement module when replacing a failed controller module.

A video for this task is available at:

- YouTube: https://www.youtube.com/playlist?list=PLYV5R7hVcs-C8THdP1nmPF25RWwGRta3v

Step 1. Remove the fan module by pinching the locking tabs on the side of the fan module, and then lifting the fan module straight out of the controller module.

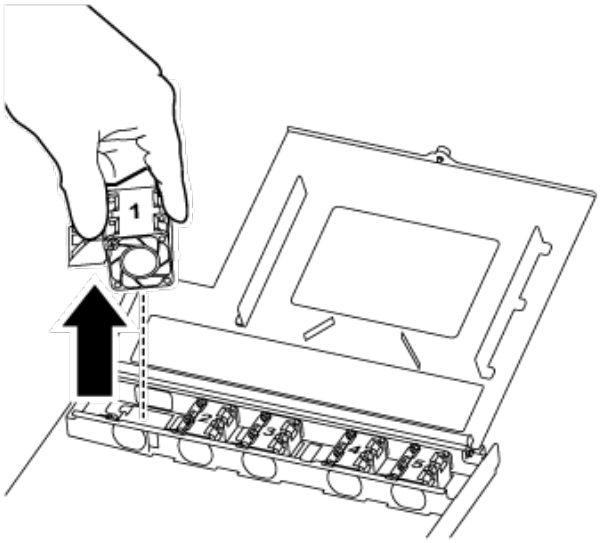

1	Fan locking tabs
2	Fan module

Step 2. Move the fan module to the replacement controller module, and then install the fan module by aligning its edges with the opening in the controller module, and then sliding the fan module into the controller module until the locking latches click into place.

Step 3. Repeat these steps for the remaining fan modules.

Moving the boot media

There is one boot media device in the DG5000 under the air duct in the controller module. You must move it from the impaired controller module to the replacement controller module.

You need a #1 magnetic Phillips head screw driver to remove the screw that holds the boot media in-place. Due to the space constraints within the controller module, you should also have a magnet to transfer the screw on to so that you do not lose it.

A video for this task is available at:

- YouTube: https://www.youtube.com/playlist?list=PLYV5R7hVcs-C8THdP1nmPF25RWwGRta3v

Step 1. Locate the boot media from the impaired controller module to the replacement controller module.

Step 2. Use either your thumb or a Phillips head screwdriver to loosen the screw on the right of the boot media until the device comes free.

Step 3. Gently lift the boot media directly out of the socket and align it into place in the replacement controller module.

Step 4. Use the screwdriver or your thumb to tighten the screw on the boot media.

Moving the DIMMs

To move the DIMMs, locate and move them from the impaired controller into the replacement controller and follow the specific sequence of steps.

A video for this task is available at:

- YouTube: https://www.youtube.com/playlist?list=PLYV5R7hVcs-C8THdP1nmPF25RWwGRta3v

Step 1. Move the DIMMs from the impaired controller module to the replacement controller module:

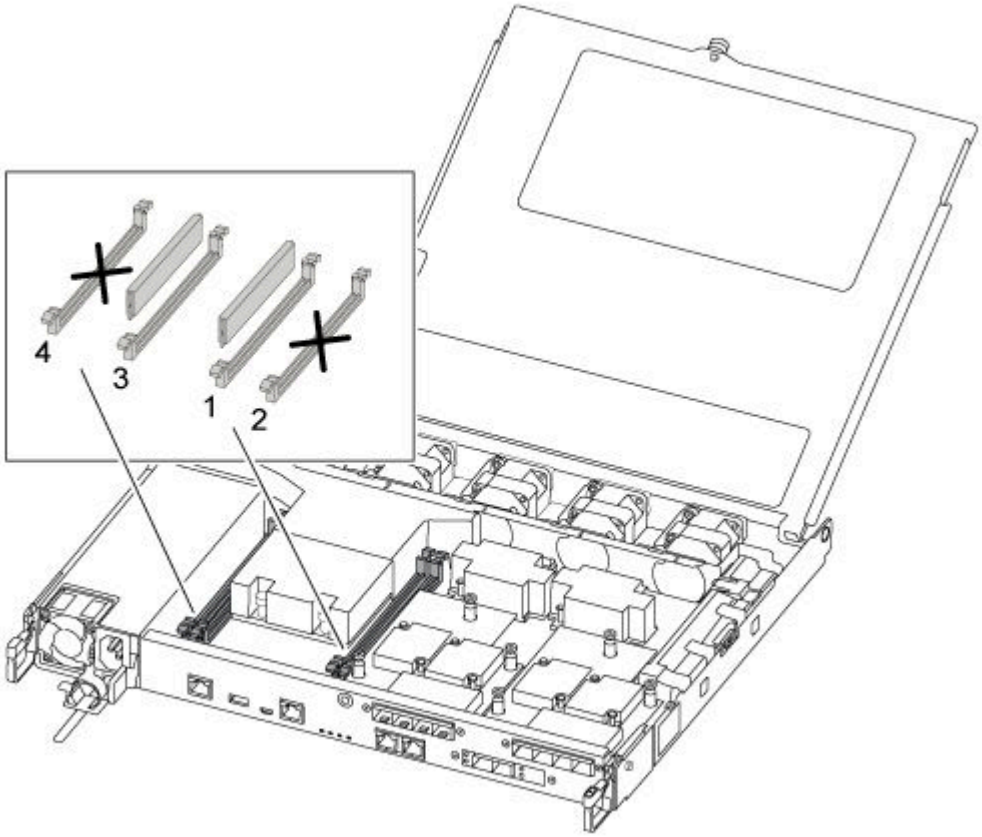

Important: Install each DIMM into the same slot it occupied in the impaired controller module.

a. Slowly push apart the DIMM ejector tabs on either side of the DIMM, and slide the DIMM out of the slot.

   Attention: Hold the DIMM by the edges to avoid pressure on the components on the DIMM circuit board.

b. Locate the corresponding DIMM slot on the replacement controller module.

c. Make sure that the DIMM ejector tabs on the DIMM socket are in the open position, and then insert the DIMM squarely into the socket.The DIMMs fit tightly in the socket. If not, reinsert the DIMM to realign it with the socket.

d. Visually inspect the DIMM to verify that it is evenly aligned and fully inserted into the socket.

e. Repeat these substeps for the remaining DIMM.

Moving a mezzanine card

To move a mezzanine card, which is also referred to as a host interface card (HIC), you must remove the cabling and any QSFPs and SFPs from the ports, move the mezzanine card to the replacement controller, reinstall any QSFPs and SFPs onto the ports, and cable the ports.

A video for this task is available at:

- YouTube: https://www.youtube.com/playlist?list=PLYV5R7hVcs-C8THdP1nmPF25RWwGRta3v

Step 1. Locate the mezzanine cards from your impaired controller module.

Step 2. Unplug any cabling associated with the mezzanine card.

Step 3. Make sure that you label the cables so that you know where they came from.

Step 4. Use either your thumb or a Phillips head screwdriver to unscrew the thumbscrew on the mezzanine card that attaches it to the system planar.

Step 5. Gently lift the mezzanine card out of the socket and move it to the same position in the replacement controller.

Step 6. Gently align the mezzanine card into place in the replacement controller.

Step 7. Use either your thumb or a Phillips head screwdriver to screw down the mezzanine card to the system planar.

Moving the NV battery

When replacing the controller module, you must move the NV battery from the impaired controller module to the replacement controller module

A video for this task is available at:

- YouTube: https://www.youtube.com/playlist?list=PLYV5R7hVcs-C8THdP1nmPF25RWwGRta3v

Step 1. Locate and move the NVMEM battery from your impaired controller module to the replacement controller module.

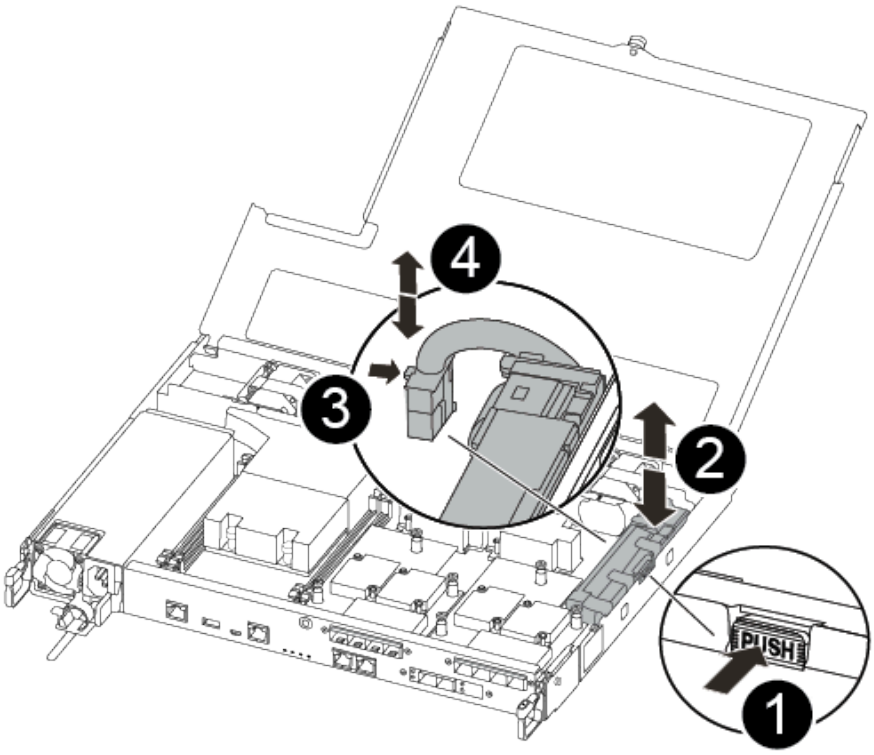

1	Squeeze the clip on the face of the battery plug.
2	Unplug the battery cable from the socket.
3	Grasp the battery and press the blue locking tab marked PUSH.
4	Lift the battery out of the holder and controller module.

a. Locate the battery plug and squeeze the clip on the face of the battery plug to release the plug from the socket.

b. Grasp the battery and press the blue locking tab marked PUSH, and then lift the battery out of the holder and controller module.

c. Locate the corresponding NV battery holder on the replacement controller module and align the NV battery to the battery holder.

d. Insert the NV battery plug into the socket.

e. Slide the battery pack down along the sheet metal side wall until the support tabs on the side wall hook into the slots on the battery pack, and the battery pack latch engages and clicks into the opening on the side wall.

f. Press firmly down on the battery pack to make sure that it is locked into place.

Installing the controller module

After all of the components have been moved from the impaired controller module to the replacement controller module, you must install the replacement controller module into the chassis, and then boot it to Maintenance mode.

You can use the following steps to install the replacement controller module in the chassis.

A video for this task is available at:

- YouTube: https://www.youtube.com/playlist?list=PLYV5R7hVcs-C8THdP1nmPF25RWwGRta3v

Step 1. If you have not already done so, close the air duct.

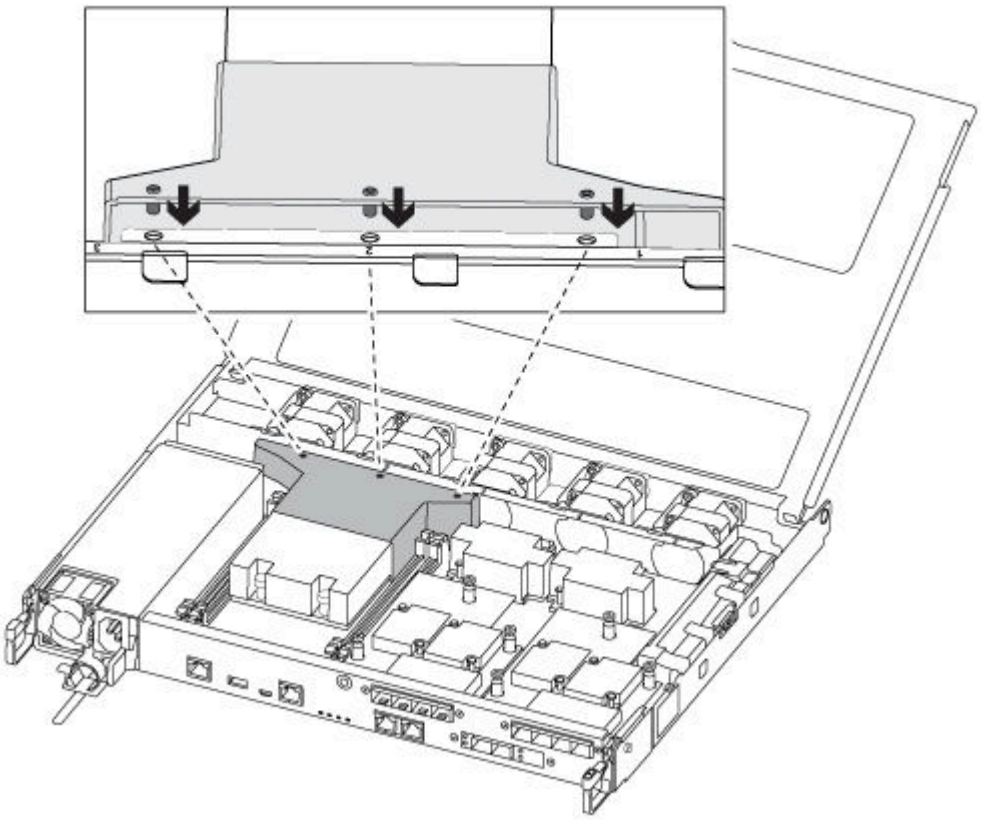

Step 2. Close the controller module cover and tighten the thumbscrew.

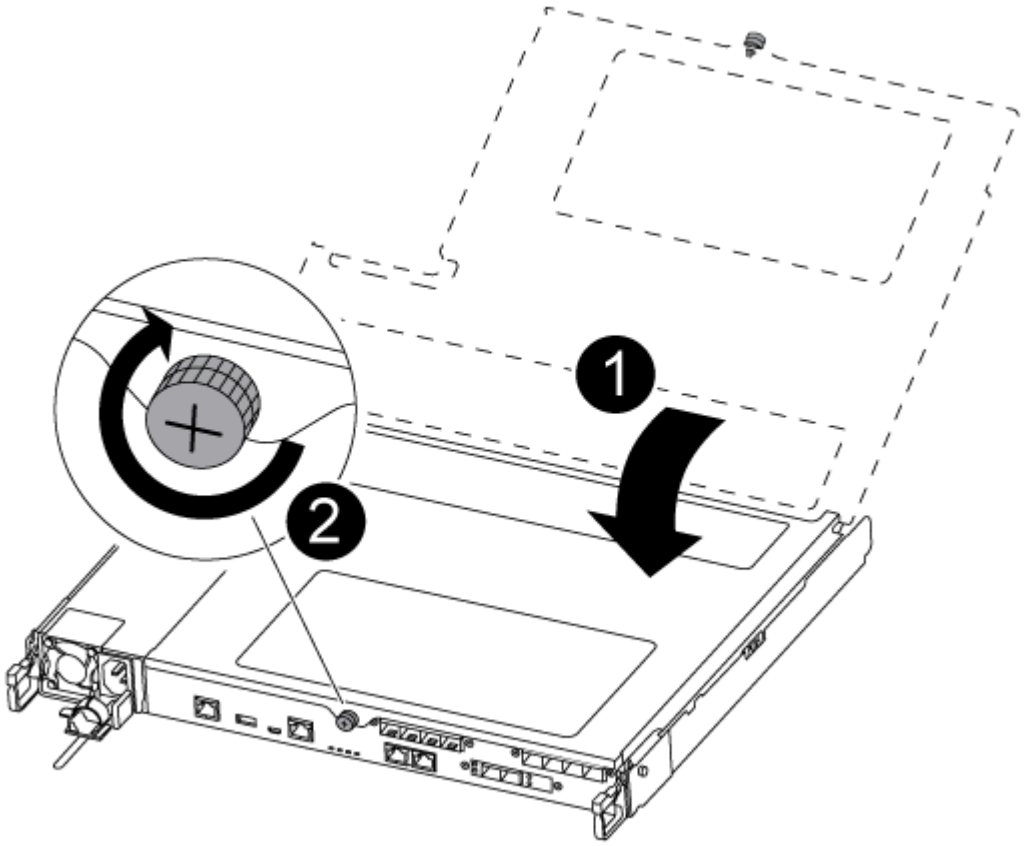

1	Controller module cover
2	Thumbscrew

Step 3. Align the end of the controller module with the opening in the chassis, and then gently push the controller module halfway into the system.

Note: Do not completely insert the controller module in the chassis until instructed to do so.

Step 4. Cable the management and console ports only, so that you can access the system to perform the tasks in the following sections.

Note: You will connect the rest of the cables to the controller module later in this procedure.

Step 5. Insert the controller module into the chassis:

a. Ensure the latching mechanism arms are locked in the fully extended position.

b. Using both hands, align and gently slide the controller module into the latching mechanism arms until it stops.

c. Cross your arms and place your index fingers through the finger holes from the inside of the latching mechanism.

d. Press your thumbs down on the orange tabs on top of the latching mechanism and gently push the controller module over the stop.

e. Release your thumbs from the top of the latching mechanisms and continue pushing until the latching mechanisms snap into place.

The controller module begins to boot as soon as it is fully seated in the chassis. Be prepared to interrupt the boot process.

The controller module should be fully inserted and flush with the edges of the chassis.

Running diagnostics

After you have replaced a component in your system, you should run diagnostic tests on that component.

Your system must be at the LOADER prompt to start diagnostics.

All commands in the diagnostic procedures are issued from the node where the component is being replaced.

Step 1. If the node to be serviced is not at the LOADER prompt, reboot the node: `system node halt -node` *node_name*After you issue the command, you should wait until the system stops at the LOADER prompt.

Step 2. At the LOADER prompt, access the special drivers specifically designed for system-level diagnostics to function properly: `boot_diags`

Step 3. Select **Scan System** from the displayed menu to enable running the diagnostics tests.

Step 4. Select **Test system** from the displayed menu to run diagnostics tests.

Step 5. Proceed based on the result of the preceding step:

- If the test failed, correct the failure, and then rerun the test.
- If the test reported no failures, select `Reboot` from the menu to reboot the system.

Completing the replacement process

After you replace the part, you can return the failed part to Lenovo, as described in the RMA instructions shipped with the kit.Contact technical support at Lenovo Data Center Support if you need the RMA number or additional help with the replacement procedure.

Step 1. Recable the system storage and networking cables, as needed.

Step 2. Reconnect the power supply.

a. Open the power cable retainer and plug the power cable into the power supply.

b. Plug the power cable into the power source.

Step 3. Return the node to normal operation by giving back its storage from the running node: `storage failover giveback -ofnode impaired_node_name`

Note: This operation need to be performed when the impaired node shows "`Waiting for giveback...`".

Step 4. If automatic giveback was disabled, reenable it: `storage failover modify -node local -auto-giveback true`

Replacing a DIMM

You must replace a DIMM in the controller module when your system registers an increasing number of correctable error correction codes (ECC); failure to do so causes a system panic.

All other components in the system must be functioning properly; if not, you must contact technical support.

You must replace the failed component with a replacement FRU component you received from your provider.

Shutting down the impaired controller

You can shut down or take over the impaired controller using different procedures, depending on the storage system hardware configuration.

Shutting down the impaired node

To shut down the impaired node, you must determine the status of the node and, if necessary, take over the node so that the healthy node continues to serve data from the impaired node storage.

- If you have a cluster with more than two nodes, it must be in quorum. If the cluster is not in quorum or a healthy node shows false for eligibility and health, you must correct the issue before shutting down the impaired node.

  ONTAP System Administration Reference

Step 1. If the impaired node is part of an HA pair, disable automatic giveback from the console of the healthy node: `storage failover modify -node local -auto-giveback false`

Step 2. Take the impaired node to the LOADER prompt:

If the impaired node is displaying...	Then...
The LOADER prompt	Go to the next step.
`Waiting for giveback...`	Press Ctrl-C, and then respond `y`.
System prompt or password prompt (enter system password)	Take over or halt the impaired node: `storage failover takeover -ofnode` *impaired_node_name* When the impaired node shows `Waiting for giveback...`, press Ctrl-C, and then respond `y`.

Removing the controller module

You must remove the controller module from the chassis when you replace a component inside the controller module.

Make sure that you label the cables so that you know where they came from.

A video for this task is available at:

- YouTube: https://www.youtube.com/playlist?list=PLYV5R7hVcs-C8THdP1nmPF25RWwGRta3v

Step 1. If you are not already grounded, properly ground yourself.

Step 2. Unplug the controller module power supplies from the source.

Step 3. Release the power cable retainers, and then unplug the cables from the power supplies.

Step 4. Remove the storage and networking cables.

Step 5. Insert your forefinger into the latching mechanism on either side of the controller module, press the lever with your thumb, and gently pull the controller a few inches out of the chassis.

Note: If you have difficulty removing the controller module, place your index fingers through the finger holes from the inside (by crossing your arms)

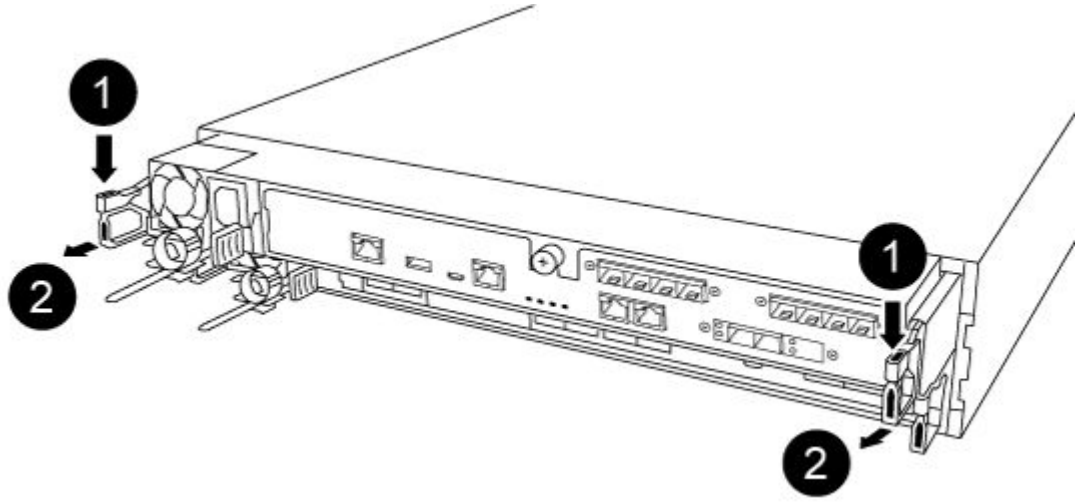

1	Lever
2	Latching mechanism

Step 6. Using both hands, grasp the controller module sides and gently pull it out of the chassis and set it on a flat, stable surface.

Step 7. Turn the thumbscrew on the front of the controller module anti-clockwise and open the controller

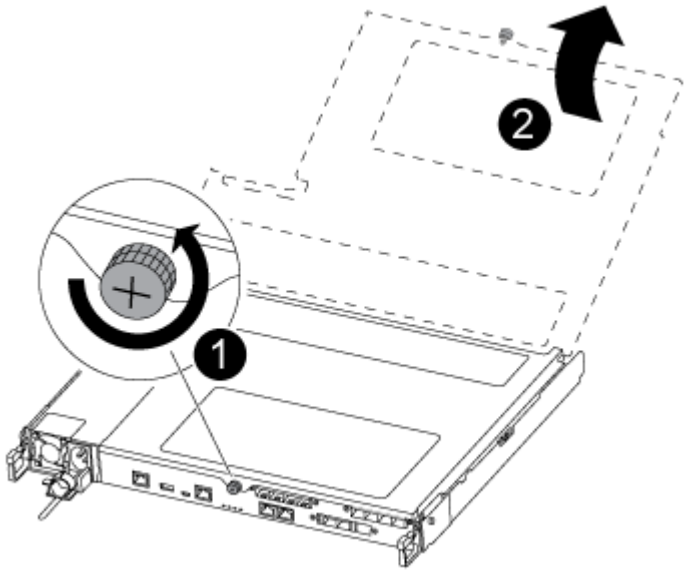

module cover.

1	Thumbscrew
2	Controller module cover

Step 8. Lift out the air duct cover.

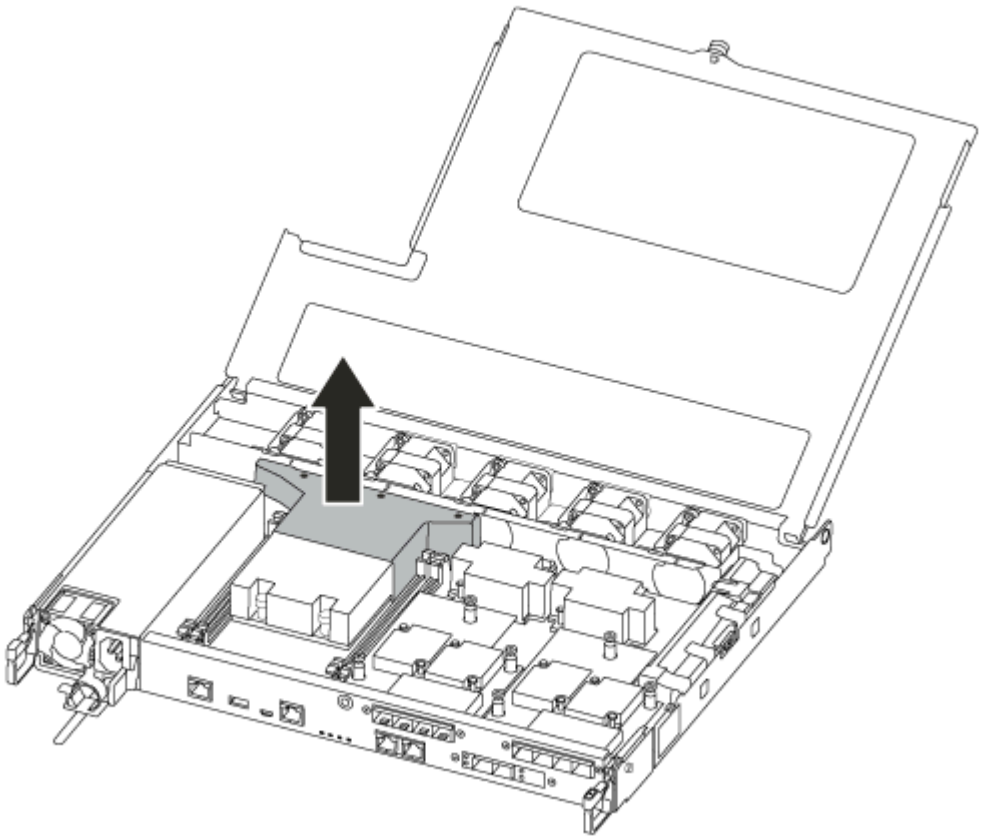

Replacing a DIMM

To replace a DIMM, you must locate it in the controller module using the DIMM map label on top of the air duct or locating it using the LED next to the DIMM, and then replace it following the specific sequence of steps.

A video for this task is available at:

- YouTube: https://www.youtube.com/playlist?list=PLYV5R7hVcs-C8THdP1nmPF25RWwGRta3v

Step 1. Replace the impaired DIMM on your controller module.

The DIMMs are in slot 3 or 1 on the motherboard. Slot 2 and 4 are left empty. Do not attempt to install DIMMs into these slots.

Note: The fault LED located on the board next to each DIMM blinks every two seconds.

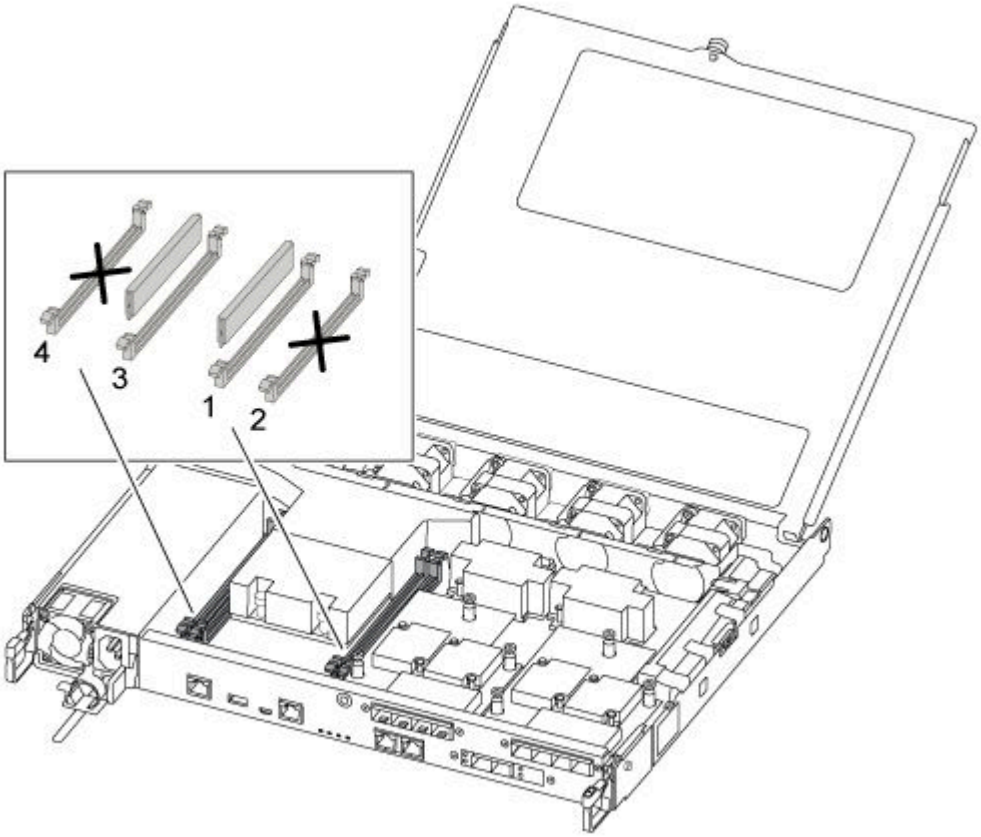

a. Note the orientation of the DIMM in the socket so that you can insert the replacement DIMM in the proper orientation.
b. Slowly push apart the DIMM ejector tabs on either side of the DIMM, and slide the DIMM out of the slot.
c. Leave DIMM ejector tabs on the connector in the open position.
d. Remove the replacement DIMM from the antistatic shipping bag, hold the DIMM by the corners, and align it to the slot.

   Attention: Hold the DIMM by the edges to avoid pressure on the components on the DIMM circuit board.
e. Insert the replacement DIMM squarely into the slot.The DIMMs fit tightly in the socket. If not, reinsert the DIMM to realign it with the socket.
f. Visually inspect the DIMM to verify that it is evenly aligned and fully inserted into the socket.

Installing the controller module

After you have replaced the component in the controller module, you must re-install the controller module into the chassis, and then boot it to Maintenance mode.

You can use the following steps to install the replacement controller module in the chassis.

A video for this task is available at:

- YouTube: https://www.youtube.com/playlist?list=PLYV5R7hVcs-C8THdP1nmPF25RWwGRta3v

Step 1. If you have not already done so, close the air duct.

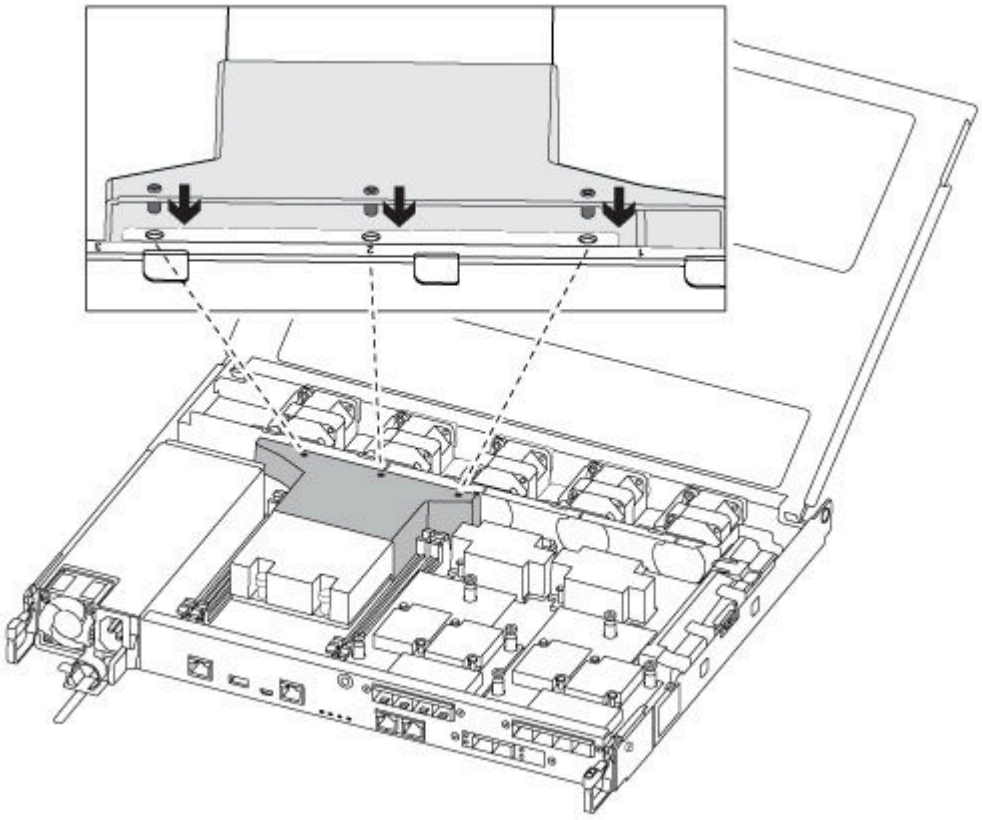

Step 2. Close the controller module cover and tighten the thumbscrew.

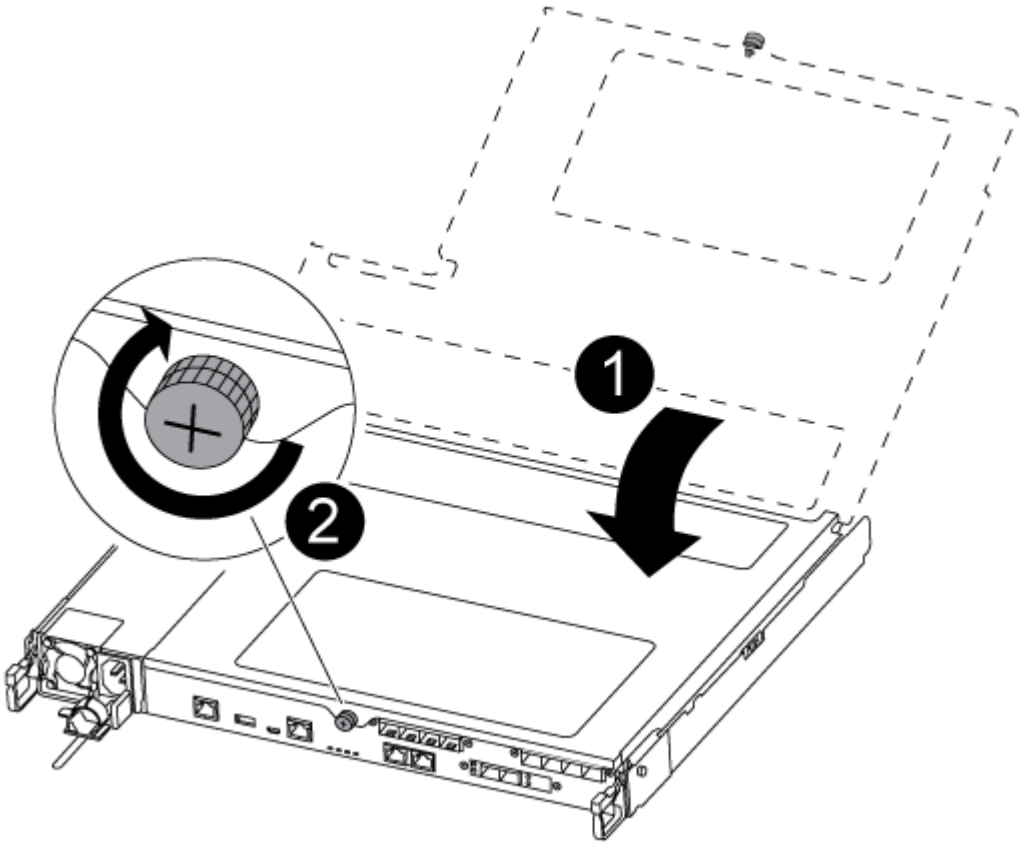

1	Controller module cover
2	Thumbscrew

Step 3. Insert the controller module into the chassis:

a. Ensure the latching mechanism arms are locked in the fully extended position.

b. Using both hands, align and gently slide the controller module into the latching mechanism arms until it stops.

c. Cross your arms and place your index fingers through the finger holes from the inside of the latching mechanism.

d. Press your thumbs down on the orange tabs on top of the latching mechanism and gently push the controller module over the stop.

e. Release your thumbs from the top of the latching mechanisms and continue pushing until the latching mechanisms snap into place.
The controller module begins to boot as soon as it is fully seated in the chassis. Be prepared to interrupt the boot process.

The controller module should be fully inserted and flush with the edges of the chassis.

Step 4. Cable the management and console ports only, so that you can access the system to perform the tasks in the following sections.

Note: You will connect the rest of the cables to the controller module later in this procedure.

Running diagnostics

After you have replaced a component in your system, you should run diagnostic tests on that component.

Your system must be at the LOADER prompt to start diagnostics.

All commands in the diagnostic procedures are issued from the node where the component is being replaced.

Step 1. If the node to be serviced is not at the LOADER prompt, reboot the node: `system node halt -node` *node_name*After you issue the command, you should wait until the system stops at the LOADER prompt.

Step 2. At the LOADER prompt, access the special drivers specifically designed for system-level diagnostics to function properly: `boot_diags`

Step 3. Select **Scan System** from the displayed menu to enable running the diagnostics tests.

Step 4. Select **Test system** from the displayed menu to run diagnostics tests.

Step 5. Proceed based on the result of the preceding step:

- If the test failed, correct the failure, and then rerun the test.
- If the test reported no failures, select `Reboot` from the menu to reboot the system.

Completing the replacement process

After you replace the part, you can return the failed part to Lenovo, as described in the RMA instructions shipped with the kit.Contact technical support at Lenovo Data Center Support if you need the RMA number or additional help with the replacement procedure.

Step 1. Recable the system storage and networking cables, as needed.

Step 2. Reconnect the power supply.

a. Open the power cable retainer and plug the power cable into the power supply.

b. Plug the power cable into the power source.

Step 3. Return the node to normal operation by giving back its storage from the running node: `storage failover giveback -ofnode impaired_node_name`

Note: This operation need to be performed when the impaired node shows "`Waiting for giveback...`".

Step 4. If automatic giveback was disabled, reenable it: `storage failover modify -node local -auto-giveback true`

Replacing the boot media

You must have a USB flash drive, formatted to MBR/FAT32, with the appropriate amount of storage to hold the `image_`*xxx*`.tgz`

- You must replace the failed component with a replacement FRU component you received from your provider.
- It is important that you apply the commands in these steps on the correct node:
  - The *impaired node* is the node on which you are performing maintenance.
  - The *healthy node* is the HA partner of the impaired node.

Pre-shutdown checks for onboard encryption keys

Prior to shutting down the impaired node and checking the status of the onboard encryption keys, you must check the status of the impaired node, disable automatic giveback, and check what version of ONTAP the system is running.

- If you have a cluster with more than two nodes, it must be in quorum. If the cluster is not in quorum or a healthy node shows false for eligibility and health, you must correct the issue before shutting down the impaired node.

  ONTAP System Administration Reference

Step 1. Check the status of the impaired node:

- If the impaired node is at the login prompt, log in as `admin`.
- If the impaired node is at the LOADER prompt and is part of HA configuration, log in as `admin` on the healthy node.
- If the impaired node is in a standalone configuration and at LOADER prompt, contact Lenovo Support.

  https://datacentersupport.lenovo.com/

Step 2. If AutoSupport is enabled, suppress automatic log creation by invoking an AutoSupport message: `system node autosupport invoke -node * -type all -message MAINT=`*number_of_hours_down*`h`

The following AutoSupport message suppresses automatic log creation for two hours: `cluster1:*> system node autosupport invoke -node * -type all -message MAINT=2h`

Step 3. If the impaired node is part of an HA configuration, disable automatic giveback from the healthy node: `storage failover modify -node local -auto-giveback falsestorage failover modify -node local -auto-giveback-after-panic false`

Step 4. Check the version of ONTAP the system is running using the `version -v` command:

- If `<lno-DARE>` is displayed, the system does not support Lenovo Volume Encryption (LVE), go to “Shutting down the impaired controller” on page 50.
- If `<lO>` is displayed and the system is running ONTAP 9.6 or later, go to “Checking LVE or LSE on systems running ONTAP 9.6 and later” on page 48.

Checking LVE or LSE on systems running ONTAP 9.6 and later

Before shutting down the impaired node, you need to check whether the system has either Lenovo Volume Encryption (LVE) or Lenovo Storage Encryption (LSE) enabled. If so, you need to verify the configuration.

Step 1. Check whether LVE is configured for any volumes in the cluster: `volume show -is-encrypted true`
If any volumes are listed in the output, LVE is configured and you need to verify the LVE configuration. If no volumes are listed, check whether LSE is configured.

Step 2. Check whether LSE is configured: `storage encryption disk show`

- If the command output list the drive details with Mode & Key ID information, LSE is configured and you need to verify the LSE configuration.
- If no disks are shown, LSE is not configured.
- If LVE and LSE are not configured, it's safe to shut down the impaired node.

Verifying LVE configuration

Step 1. Display the key IDs of the authentication keys that are stored on the key management servers: `security key-manager query`

- If the `KeyManager` type displays `external` and the `Restored` column displays `yes`, it's safe to shut down the impaired node.
- If the `KeyManager` type displays `onboard` and the `Restored` column displays `yes`, you need to complete some additional steps.
- If the `KeyManager` type displays `external` and the `Restored` column displays anything other than `yes`, you need to complete some additional steps.
- If the `KeyManager` type displays `onboard` and the `Restored` column displays anything other than `yes`, you need to complete some additional steps.

Step 2. If the `KeyManager` type displays `onboard` and the `Restored` column displays `yes`, manually backup the OKM information:

a. Go to advanced privilege mode and enter `y` when prompted to continue: `set -priv advanced`

b. Enter the command to display the key management information: `security key-manager onboard show-backup`

c. Copy the contents of the backup information to a separate file or your log file. You'll need it in disaster scenarios where you might need to manually recover OKM.

d. Return to admin mode: `set -priv admin`

e. Shut down the impaired node.

Step 3. If the `KeyManager` type displays `external` and the `Restored` column displays anything other than `yes`:

a. Restore the external key management authentication keys to all nodes in the cluster: `security key-manager external restore`If the command fails, contact Lenovo Support.

https://datacentersupport.lenovo.com/

b. Verify that the `Restored` column equals `yes` for all authentication keys: `security key-manager key query`

c. Shut down the impaired node.

Step 4. If the `KeyManager` type displays `onboard` and the `Restored` column displays anything other than `yes`:

a. Enter the onboard security key-manager sync command: `security key-manager onboard sync`

Note: Enter the customer's onboard key management passphrase at the prompt. If the passphrase cannot be provided, contact Lenovo Support.

https://datacentersupport.lenovo.com/

b. Verify the `Restored` column shows `yes` for all authentication keys: `security key-manager key query`

c. Verify that the `KeyManager` type shows `onboard`, manually backup the OKM information.

d. Go to advanced privilege mode and enter `y` when prompted to continue: `set -priv advanced`

e. Enter the command to display the key management backup information: `security key-manager onboard show-backup`

f. Copy the contents of the backup information to a separate file or your log file. You'll need it in disaster scenarios where you might need to manually recover OKM.

g. Return to admin mode: `set -priv admin`

h. You can safely shutdown the node.

Verifying LSE configuration

Step 1. Display the key IDs of the authentication keys that are stored on the key management servers: `security key-manager query`

- If the `KeyManager` type displays `external` and the `Restored` column displays `yes`, it's safe to shut down the impaired node.

- If the `KeyManager` type displays `onboard` and the `Restored` column displays `yes`, you need to complete some additional steps.
- If the `KeyManager` type displays `external` and the `Restored` column displays anything other than `yes`, you need to complete some additional steps.
- If the `KeyManager` type displays `external` and the `Restored` column displays anything other than `yes`, you need to complete some additional steps.

Step 2. If the `KeyManager` type displays `onboard` and the `Restored` column displays `yes`, manually backup the OKM information:

a. Go to advanced privilege mode and enter `y` when prompted to continue: `set -priv advanced`

b. Enter the command to display the key management information: `security key-manager onboard show-backup`

c. Copy the contents of the backup information to a separate file or your log file. You'll need it in disaster scenarios where you might need to manually recover OKM.

d. Return to admin mode: `set -priv admin`

e. You can safely shutdown the node.

Step 3. If the `KeyManager` type displays `external` and the `Restored` column displays anything other than `yes`:

a. Enter the onboard security key-manager sync command: `security key-manager external sync`If the command fails, contact Lenovo Support.

https://datacentersupport.lenovo.com/

b. Verify that the `Restored` column equals `yes` for all authentication keys: `security key-manager key query`

c. You can safely shutdown the node.

Step 4. If the `KeyManager` type displays `onboard` and the `Restored` column displays anything other than `yes`:

a. Enter the onboard security key-manager sync command: `security key-manager onboard sync`Enter the customer's onboard key management passphrase at the prompt. If the passphrase cannot be provided, contact Lenovo Support.

https://datacentersupport.lenovo.com/

b. Verify the `Restored` column shows `yes` for all authentication keys: `security key-manager key query`

c. Verify that the `KeyManager` type shows `onboard`, manually backup the OKM information.

d. Go to advanced privilege mode and enter `y` when prompted to continue: `set -priv advanced`

e. Enter the command to display the key management backup information: `security key-manager onboard show-backup`

f. Copy the contents of the backup information to a separate file or your log file. You'll need it in disaster scenarios where you might need to manually recover OKM.

g. Return to admin mode: `set -priv admin`

h. You can safely shutdown the node.

Shutting down the impaired controller

You can shut down or take over the impaired controller using different procedures, depending on the storage system hardware configuration.

Completing node shutdown

After completing the LVE or Lenovo Storage Encryption (LSE) tasks, you need to complete the shutdown of the impaired node.

Step 1. If the impaired node isn't at the LOADER prompt:

If the impaired node displays...	Then...
`Waitingforgiveback...`	Press Ctrl-C, and then respond `y` when prompted.
System prompt or password prompt (enter system password)	Take over or halt the impaired node: • For an HA pair, take over the impaired node from the healthy node: `storage failover takeover -ofnode` *impaired_node_name*When the impaired node shows `Waiting for giveback...`, press Ctrl-C, and then respond `y`.

Step 2. From the LOADER prompt, enter: `printenv` to capture all boot environmental variables. Save the output to your log file.

Note: This command may not work if the boot device is corrupted or non-functional.

Removing the controller module

You must remove the controller module from the chassis when you replace a component inside the controller module.

Make sure that you label the cables so that you know where they came from.

A video for this task is available at:

- YouTube: https://www.youtube.com/playlist?list=PLYV5R7hVcs-C8THdP1nmPF25RWwGRta3v

Step 1. If you are not already grounded, properly ground yourself.

Step 2. Unplug the controller module power supplies from the source.

Step 3. Release the power cable retainers, and then unplug the cables from the power supplies.

Step 4. Remove the storage and networking cables.

Step 5. Insert your forefinger into the latching mechanism on either side of the controller module, press the lever with your thumb, and gently pull the controller a few inches out of the chassis.

Note: If you have difficulty removing the controller module, place your index fingers through the finger holes from the inside (by crossing your arms)

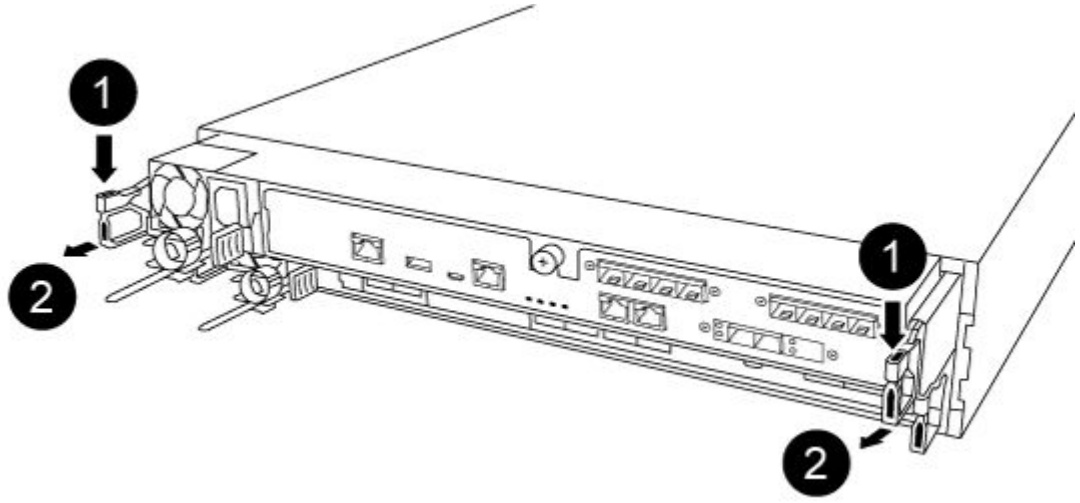

1	Lever
2	Latching mechanism

Step 6. Using both hands, grasp the controller module sides and gently pull it out of the chassis and set it on a flat, stable surface.

Step 7. Turn the thumbscrew on the front of the controller module anti-clockwise and open the controller

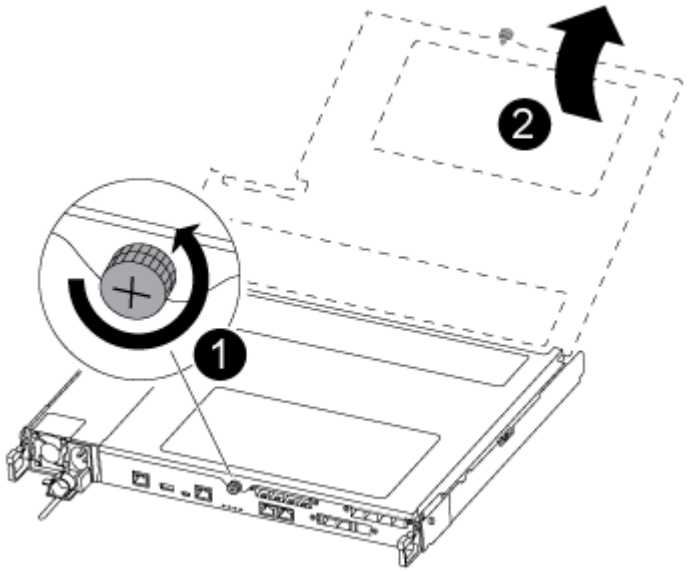

module cover.

1	Thumbscrew
2	Controller module cover

Step 8. Lift out the air duct cover.

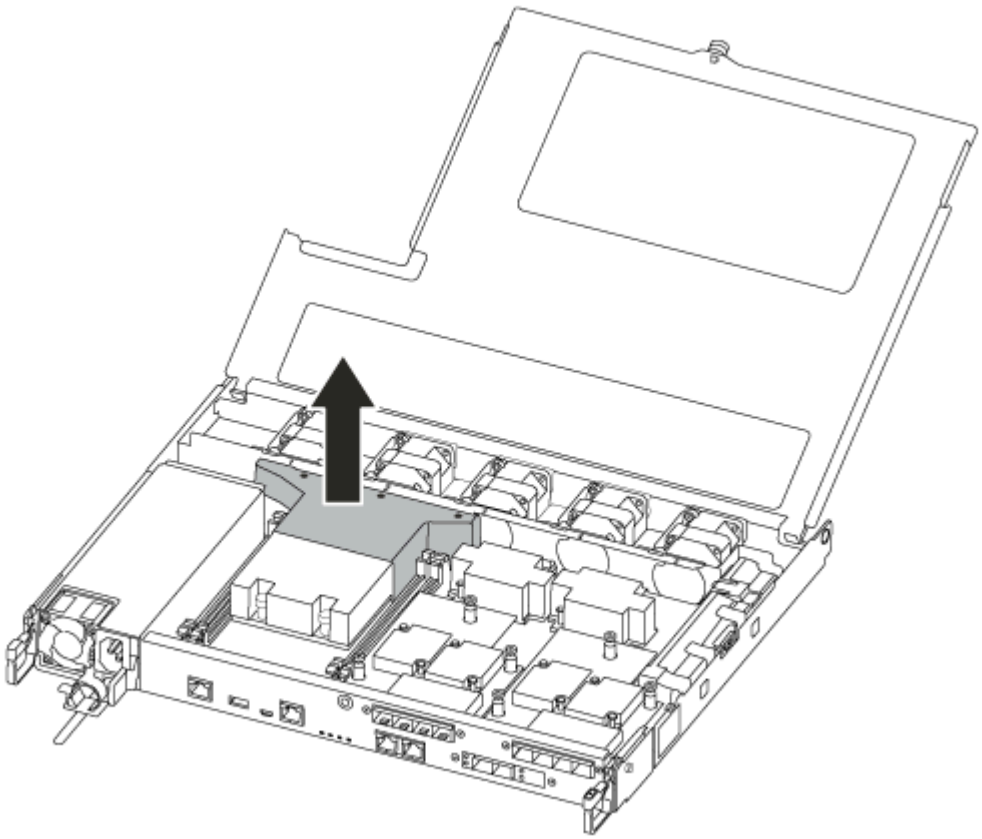

Replacing the boot media

You locate the failed boot media in the controller module by removing the air duct on the controller module before you can replace the boot media.

You need a #1 magnetic Phillips head screw driver to remove the screw that holds the boot media in-place. Due to the space constraints within the controller module, you should also have a magnet to transfer the screw on to so that you do not loose it.

A video for this task is available at:

- YouTube: https://www.youtube.com/playlist?list=PLYV5R7hVcs-C8THdP1nmPF25RWwGRta3v

Step 1. Locate the impaired boot media from the controller module.

Step 2. Use either your thumb or a Phillips head screwdriver to loosen the screw on the right of the boot media until the device comes free.

Step 3. Gently lift the boot media directly out of the socket.

Step 4. Align the replacement boot media into place in the impaired controller.

Step 5. Use the screwdriver or your thumb to tighten the screw on the boot media.

Transferring the boot image to the boot media

The replacement boot media that you installed is without a boot image so you need to transfer a boot image using a USB flash drive.

- You must have a USB flash drive, formatted to MBR/FAT32, with at least 4GB capacity
- A copy of the same image version of ONTAP as what the impaired controller was running. You can download the appropriate image from the Downloads section on the Lenovo Data Center Support Site
  - If NVE is enabled, download the image with Lenovo Volume Encryption, as indicated in the download button.
  - If NVE is not enabled, download the image without Lenovo Volume Encryption, as indicated in the download button.
- If your system is an HA pair, you must have a network connection.
- If your system is a stand-alone system you do not need a network connection, but you must perform an additional reboot when restoring the `var` file system.

Step 1. Download and copy the appropriate service image from the Lenovo Data Center Support Site to the USB flash drive.

a. Download the service image to your work space on your laptop.

b. Unzip the service image.

Note: If you are extracting the contents using Windows, do not use winzip to extract the netboot image. Use another extraction tool, such as 7-Zip or WinRAR.

There are two folders in the unzipped service image file:

- `boot`
- `efi`

c. Copy the `efi` folder to the top directory on the USB flash drive.
The USB flash drive should have the `efi` folder and the same image version of ONTAP as what the impaired controller was running.

d. Remove the USB flash drive from your laptop.

Step 2. If you have not already done so, close the air duct.

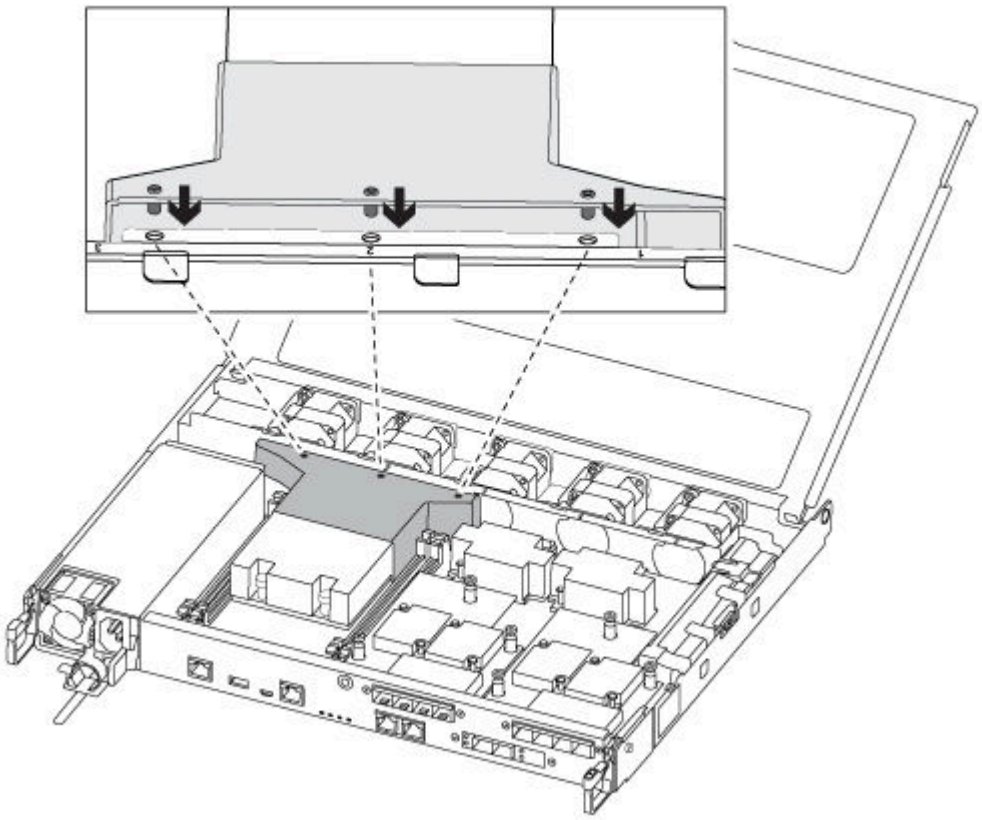

Step 3. Close the controller module cover and tighten the thumbscrew.

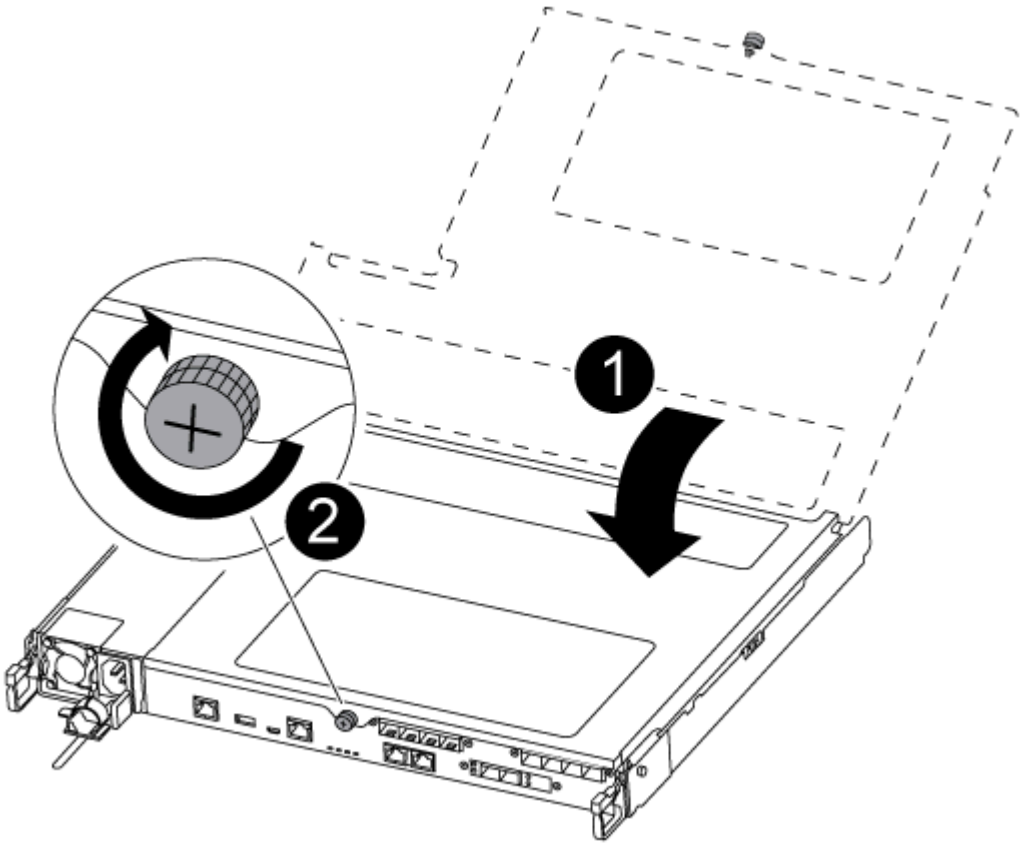

1	Controller module cover
2	Thumbscrew

Step 4. Align the end of the controller module with the opening in the chassis, and then gently push the controller module halfway into the system.

Step 5. Reattach the storage and networking cables.

Step 6. Plug the power cable into the power supply and reinstall the power cable retainer.

Step 7. Insert the USB flash drive into the USB slot on the controller module.Make sure that you install the USB flash drive in the slot labeled for USB devices, and not in the USB console port.

Step 8. Push the controller module all the way into the chassis:

a. Cross your arms and place your index fingers through the finger holes from the inside of the latching mechanism.

b. Press your thumbs down on the orange tabs on top of the latching mechanism and gently push the controller module over the stop.

c. Release your thumbs from the top of the latching mechanisms and continue pushing until the latching mechanisms snap into place.
The controller module begins to boot as soon as it is fully seated in the chassis. Be prepared to interrupt the boot process.

The controller module should be fully inserted and flush with the edges of the chassis.

Step 9. Check that all required boot environment variables and bootargs are properly set for your system type and configuration using the `printenv` *bootarg name* command and correct any errors using the `setenv` *variable-name* <*value*> command.

a. Check the boot environment variables:

- *bootarg.init.boot_clustered*
- *partner-sysid*
- *bootarg.init.flash_optimize* for DG5000
- *bootarg.init.switchless_cluster.enable*

b. If External Key Manager is enabled, check the bootarg values, listed in the **kenv** ASUP output:

- *bootarg.storageencryption.support* <*value*>
- *bootarg.keymanager.support* <*value*>
- *kmip.init.interface* <*value*>
- *kmip.init.ipaddr* <*value*>
- *kmip.init.netmask* <*value*>
- *kmip.init.gateway* <*value*>

c. If Onboard Key Manager is enabled, check the bootarg values, listed in the **kenv** ASUP output:

- *bootarg.storageencryption.support* <*value*>
- *bootarg.keymanager.support* <*value*>
- *bootarg.onboard_keymanager* <*value*>

d. Save the environment variables you changed with the `savenv` command

e. Confirm your changes using the `printenv` *variable-name* command.

Booting the recovery image

You must boot the ONTAP image from the USB drive, restore the file system, and verify the environmental variables.

Step 1. From the LOADER prompt, boot the recovery image from the USB flash drive: `boot_recovery`

The image is downloaded from the USB flash drive.

Step 2. When prompted, either enter the name of the image or accept the default image displayed inside the brackets on your screen.

Step 3. Restore the `var` file system:

If your system has...	Then...
A network connection	1. Press `y` when prompted to restore the backup configuration. 2. Set the healthy node to advanced privilege level: `set -privilege advanced` 3. Run the restore backup command: `system node restore-backup -node local -target-address` *impaired_node_IP_address* 4. Return the node to admin level: `set -privilege admin` 5. Press `y` when prompted to use the restored configuration. 6. Press `y` when prompted to reboot the node.
No network connection	1. Press `n` when prompted to restore the backup configuration. 2. Reboot the system when prompted by the system. 3. Select the **Update flash from backup config** (sync flash) option from the displayed menu. If you are prompted to continue with the update, press `y`.
No network connection and is in a MetroCluster IP configuration	1. Press `n` when prompted to restore the backup configuration. 2. Reboot the system when prompted by the system. 3. Wait for the iSCSI storage connections to connect. You can proceed after you see the following messages: *date-and-time* [*node-name*:iscsi.session.stateChanged:notice]: iSCSI session state is changed to Connected for the target *iSCSI-target* (type: dr_auxiliary, address: *ip-address*). *date-and-time* [*node-name*:iscsi.session.stateChanged:notice]: iSCSI session state is changed to Connected for the target *iSCSI-target* (type: dr_partner, address: *ip-address*). *date-and-time* [*node-name*:iscsi.session.stateChanged:notice]: iSCSI session state is changed to Connected for the target *iSCSI-target* (type: dr_auxiliary, address: *ip-address*). *date-and-time* [*node-name*:iscsi.session.stateChanged:notice]: iSCSI session state is changed to Connected for the target *iSCSI-target* (type: dr_partner, address: *ip-address*). 4. Select the **Update flash from backup config** (sync flash) option from the displayed menu. If you are prompted to continue with the update, press `y`.

Step 4. Verify that the environmental variables are set as expected.

a. Take the node to the LOADER prompt.

b. Check the environment variable settings with the `printenv` command.

c. If an environment variable is not set as expected, modify it with the `setenv`*environment_variable_name changed_value* command.

d. Save your changes using the `saveenv` command.

e. Reboot the node.

Step 5. The next step depends on your system configuration:

If your system is in...	Then...
An HA pair	After the impaired node is displaying the `Waiting for Giveback...` message, perform a giveback from the healthy node: 1. Perform a giveback from the healthy node: `storage failover giveback -ofnode` *partner_node_name* This initiates the process of returning ownership of the impaired node's aggregates and volumes from the healthy node back to the impaired node. **Note:** If the giveback is vetoed, you can consider overriding the vetoes. If giveback is vetoed 2. Monitor the progress of the giveback operation by using the `storage failover show-giveback` command. 3. After the giveback operation is complete, confirm that the HA pair is healthy and that takeover is possible by using the `storage failover show` command. 4. Restore automatic giveback if you disabled it by using the `storage failover modify` command.

Completing the replacement process

After you replace the part, you can return the failed part to Lenovo, as described in the RMA instructions shipped with the kit.Contact technical support at Lenovo Data Center Support if you need the RMA number or additional help with the replacement procedure.

Step 1. Recable the system storage and networking cables, as needed.

Step 2. Reconnect the power supply.

a. Open the power cable retainer and plug the power cable into the power supply.

b. Plug the power cable into the power source.

Step 3. Return the node to normal operation by giving back its storage from the running node: `storage failover giveback -ofnode impaired_node_name`

Note: This operation need to be performed when the impaired node shows "`Waiting for giveback...`".

Step 4. If automatic giveback was disabled, reenable it: `storage failover modify -node local -auto-giveback true`

Replacing the real-time clock battery

You replace the real-time clock (RTC) battery in the controller module so that your system's services and applications that depend on accurate time synchronization continue to function.

- You can use this procedure with all versions of ONTAP supported by your system
- All other components in the system must be functioning properly; if not, you must contact technical support.

Shutting down the impaired controller

You can shut down or take over the impaired controller using different procedures, depending on the storage system hardware configuration.

Shutting down the impaired node

To shut down the impaired node, you must determine the status of the node and, if necessary, take over the node so that the healthy node continues to serve data from the impaired node storage.

- If you have a cluster with more than two nodes, it must be in quorum. If the cluster is not in quorum or a healthy node shows false for eligibility and health, you must correct the issue before shutting down the impaired node.

  ONTAP System Administration Reference

Step 1. If the impaired node is part of an HA pair, disable automatic giveback from the console of the healthy node: `storage failover modify -node local -auto-giveback false`

Step 2. Take the impaired node to the LOADER prompt:

If the impaired node is displaying...	Then...
The LOADER prompt	Go to the next step.
`Waiting for giveback...`	Press Ctrl-C, and then respond `y`.
System prompt or password prompt (enter system password)	Take over or halt the impaired node: `storage failover takeover -ofnode` *impaired_node_name* When the impaired node shows `Waiting for giveback...`, press Ctrl-C, and then respond `y`.

Removing the controller module

You must remove the controller module from the chassis when you replace a component inside the controller module.

Make sure that you label the cables so that you know where they came from.

A video for this task is available at:

- YouTube: https://www.youtube.com/playlist?list=PLYV5R7hVcs-C8THdP1nmPF25RWwGRta3v

Step 1. If you are not already grounded, properly ground yourself.

Step 2. Unplug the controller module power supplies from the source.

Step 3. Release the power cable retainers, and then unplug the cables from the power supplies.

Step 4. Remove the storage and networking cables.

Step 5. Insert your forefinger into the latching mechanism on either side of the controller module, press the lever with your thumb, and gently pull the controller a few inches out of the chassis.

Note: If you have difficulty removing the controller module, place your index fingers through the finger holes from the inside (by crossing your arms)

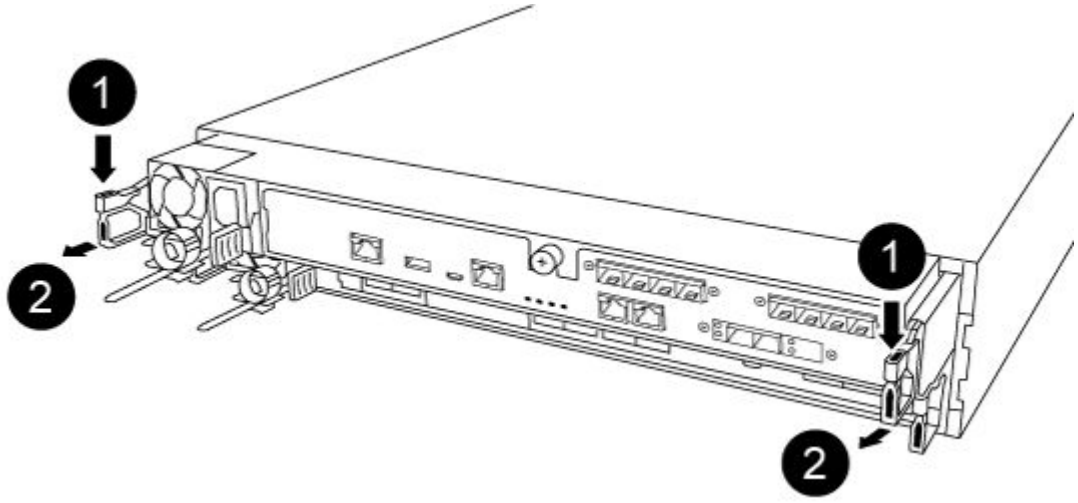

1	Lever
2	Latching mechanism

Step 6. Using both hands, grasp the controller module sides and gently pull it out of the chassis and set it on a flat, stable surface.

Step 7. Turn the thumbscrew on the front of the controller module anti-clockwise and open the controller

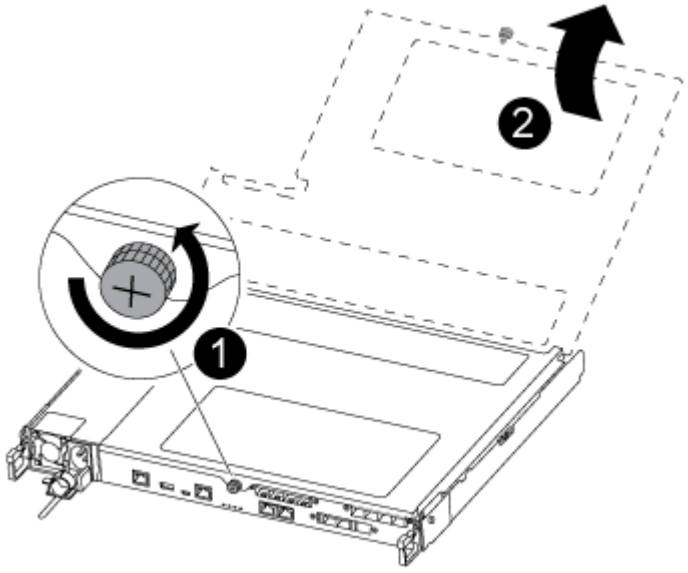

module cover.

1	Thumbscrew
2	Controller module cover

Step 8. Lift out the air duct cover.

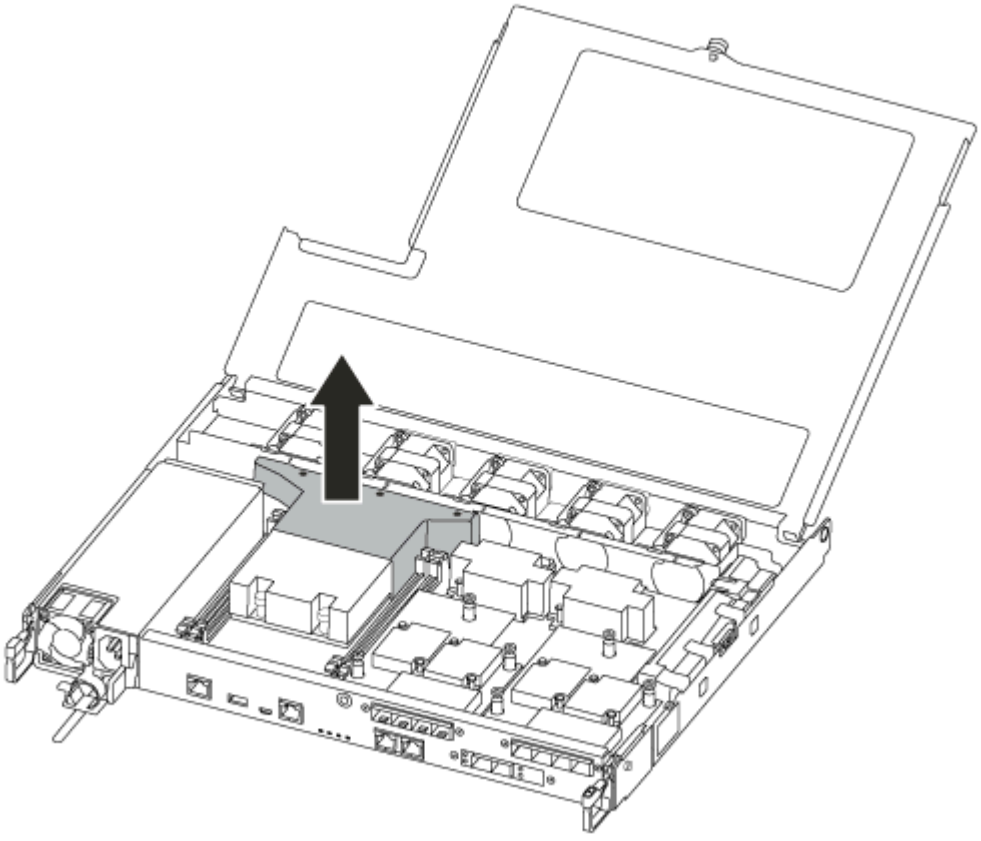

Replacing the RTC battery

To replace the RTC battery, locate it inside the controller and follow the specific sequence of steps.

A video for this task is available at:

- YouTube: https://www.youtube.com/playlist?list=PLYV5R7hVcs-C8THdP1nmPF25RWwGRta3v

Step 1. Locate the RTC battery between the heatsink and the midplane and remove it exactly as shown in the graphic.

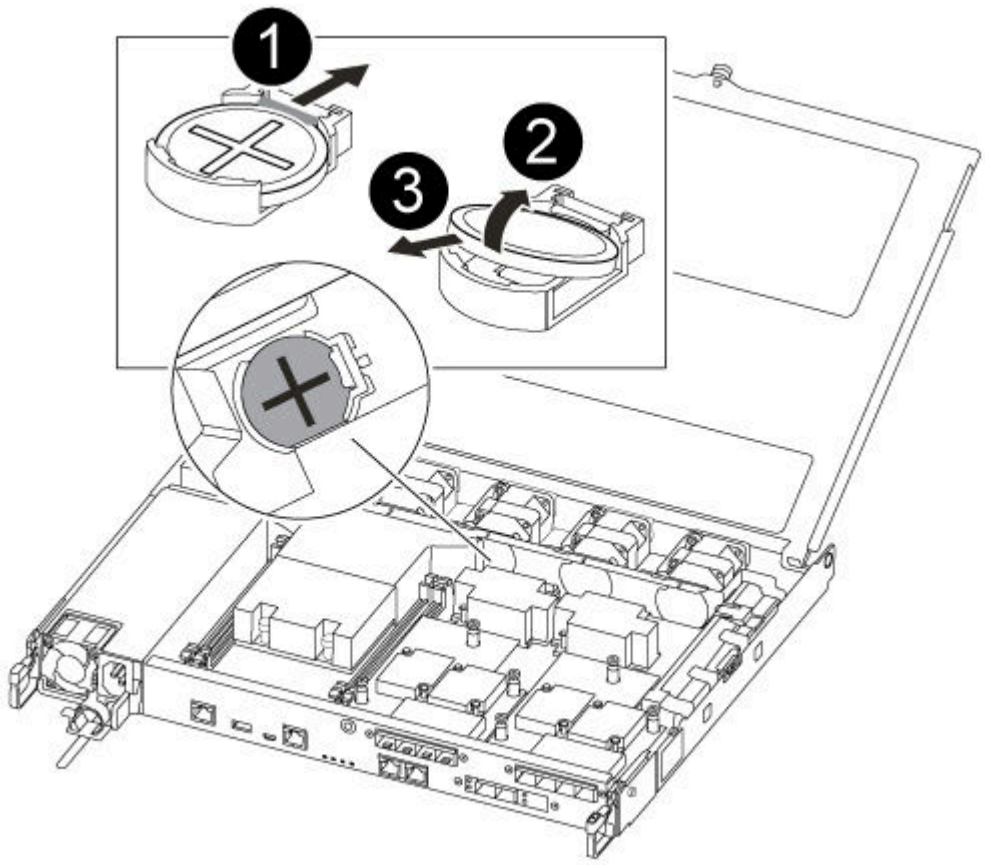

1	Gently pull tab away from the battery housing. **Attention:** Pulling it away aggressively might displace the tab.
2	Lift the battery up. **Note:** Make a note of the polarity of the battery.
3	The battery should eject out.

The battery will be ejected out.

Step 2. Remove the replacement battery from the antistatic shipping bag.

Step 3. Locate the RTC battery holder between the heatsink and the midplane and insert it exactly as shown in the graphic.

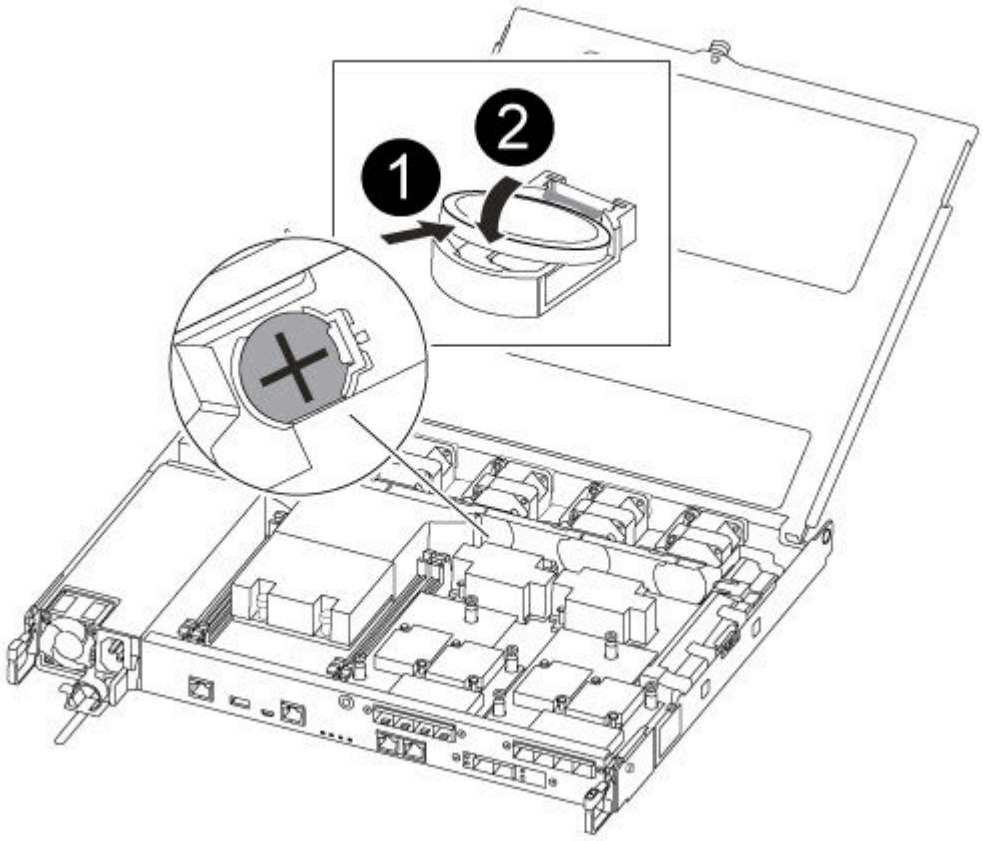

1	With positive polarity face up, slide the battery under the tab of the battery housing.
2	Push the battery gently into place and make sure the tab secures it to the housing. **Attention:** Pushing it in aggressively might cause the battery to eject out again.

Step 4. Visually inspect the battery to make sure that it is completely installed into the holder and that the polarity is correct.

Reinstalling the controller module

After you replace a component within the controller module, you must reinstall the controller module in the system chassis and boot it.

A video for this task is available at:

- YouTube: https://www.youtube.com/playlist?list=PLYV5R7hVcs-C8THdP1nmPF25RWwGRta3v

Step 1. Close the controller module cover and tighten the thumbscrew.

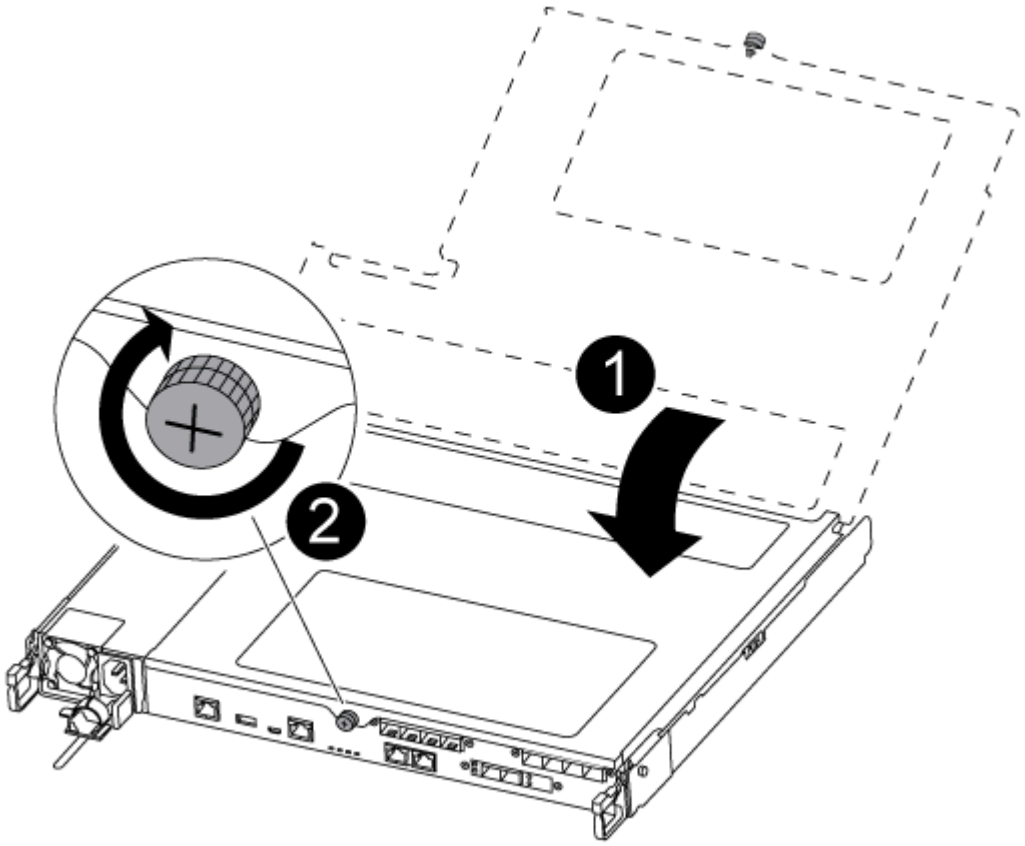

1	Controller module cover
2	Thumbscrew

Step 2. Insert the controller module into the chassis:

a. Ensure the latching mechanism arms are locked in the fully extended position.

b. Using both hands, align and gently slide the controller module into the latching mechanism arms until it stops.

c. Cross your arms and place your index fingers through the finger holes from the inside of the latching mechanism.

d. Press your thumbs down on the orange tabs on top of the latching mechanism and gently push the controller module over the stop.

e. Release your thumbs from the top of the latching mechanisms and continue pushing until the latching mechanisms snap into place.
The controller module begins to boot as soon as it is fully seated in the chassis. Be prepared to interrupt the boot process.

The controller module should be fully inserted and flush with the edges of the chassis.

Step 3. Recable the system, as needed.

Step 4. Return the node to normal operation by giving back its storage from the running node: `storage failover giveback -ofnode` *impaired_node_name*

Note: This should be done when the impaired node shows "Waiting for giveback..."

Step 5. If automatic giveback was disabled, reenable it: `storage failover modify -node local -auto-giveback true`

Completing the replacement process

After you replace the part, you can return the failed part to Lenovo, as described in the RMA instructions shipped with the kit.Contact technical support at Lenovo Data Center Support if you need the RMA number or additional help with the replacement procedure.

Step 1. Recable the system storage and networking cables, as needed.

Step 2. Reconnect the power supply.

a. Open the power cable retainer and plug the power cable into the power supply.

b. Plug the power cable into the power source.

Step 3. Return the node to normal operation by giving back its storage from the running node: `storage failover giveback -ofnode impaired_node_name`

Note: This operation need to be performed when the impaired node shows "`Waiting for giveback...`".

Step 4. If automatic giveback was disabled, reenable it: `storage failover modify -node local -auto-giveback true`

Replacing mezzanine cards

- You can use this procedure with all versions of ONTAP supported by your system.
- All other components in the system must be functioning properly; if not, you must contact technical support.

Shutting down the impaired controller

You can shut down or take over the impaired controller using different procedures, depending on the storage system hardware configuration.

Shutting down the impaired node

To shut down the impaired node, you must determine the status of the node and, if necessary, take over the node so that the healthy node continues to serve data from the impaired node storage.

- If you have a cluster with more than two nodes, it must be in quorum. If the cluster is not in quorum or a healthy node shows false for eligibility and health, you must correct the issue before shutting down the impaired node.

  ONTAP System Administration Reference

Step 1. If the impaired node is part of an HA pair, disable automatic giveback from the console of the healthy node: `storage failover modify -node local -auto-giveback false`

Step 2. Take the impaired node to the LOADER prompt:

If the impaired node is displaying...	Then...
The LOADER prompt	Go to the next step.
`Waiting for giveback...`	Press Ctrl-C, and then respond `y`.
System prompt or password prompt (enter system password)	Take over or halt the impaired node: `storage failover takeover -ofnode` *impaired_node_name* When the impaired node shows `Waiting for giveback...`, press Ctrl-C, and then respond `y`.

Removing the controller module

You must remove the controller module from the chassis when you replace a component inside the controller module.

Make sure that you label the cables so that you know where they came from.

A video for this task is available at:

- YouTube: https://www.youtube.com/playlist?list=PLYV5R7hVcs-C8THdP1nmPF25RWwGRta3v

Step 1. If you are not already grounded, properly ground yourself.

Step 2. Unplug the controller module power supplies from the source.

Step 3. Release the power cable retainers, and then unplug the cables from the power supplies.

Step 4. Remove the storage and networking cables.

Step 5. Insert your forefinger into the latching mechanism on either side of the controller module, press the lever with your thumb, and gently pull the controller a few inches out of the chassis.

Note: If you have difficulty removing the controller module, place your index fingers through the finger holes from the inside (by crossing your arms)

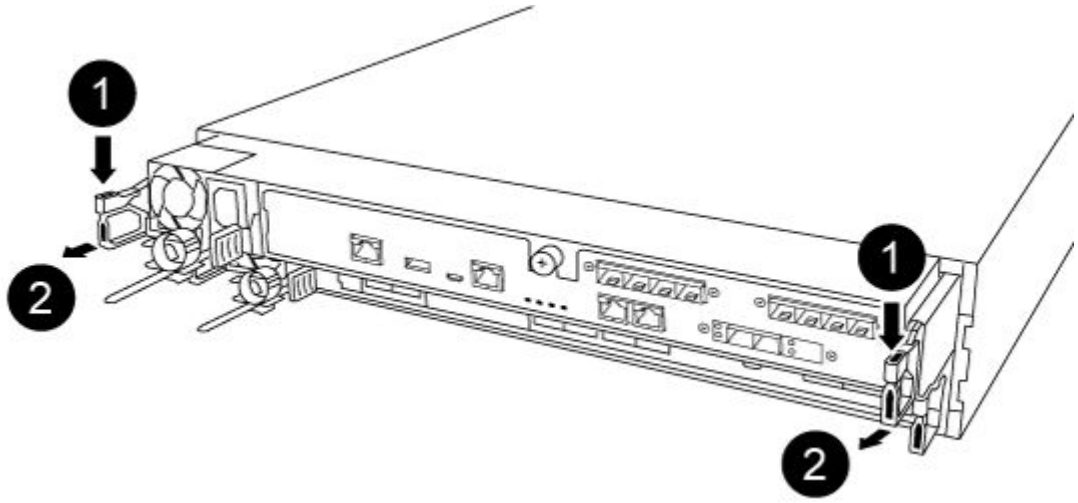

1	Lever
2	Latching mechanism

Step 6. Using both hands, grasp the controller module sides and gently pull it out of the chassis and set it on a flat, stable surface.

Step 7. Turn the thumbscrew on the front of the controller module anti-clockwise and open the controller

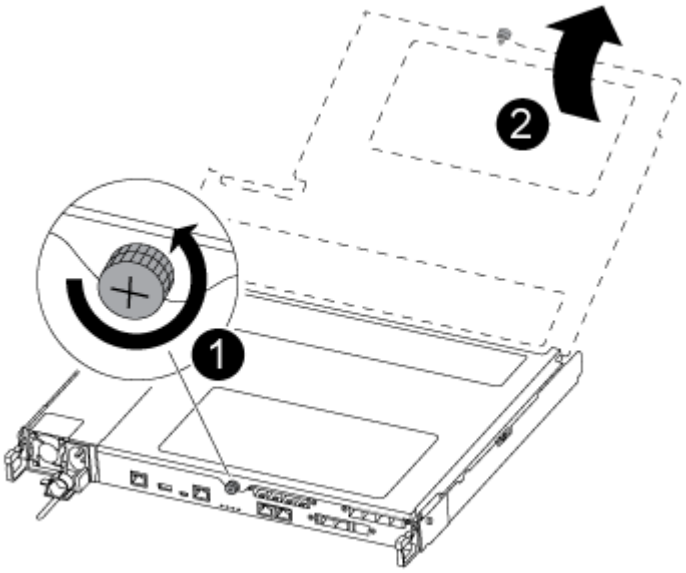

module cover.

1	Thumbscrew
2	Controller module cover

Step 8. Lift out the air duct cover.

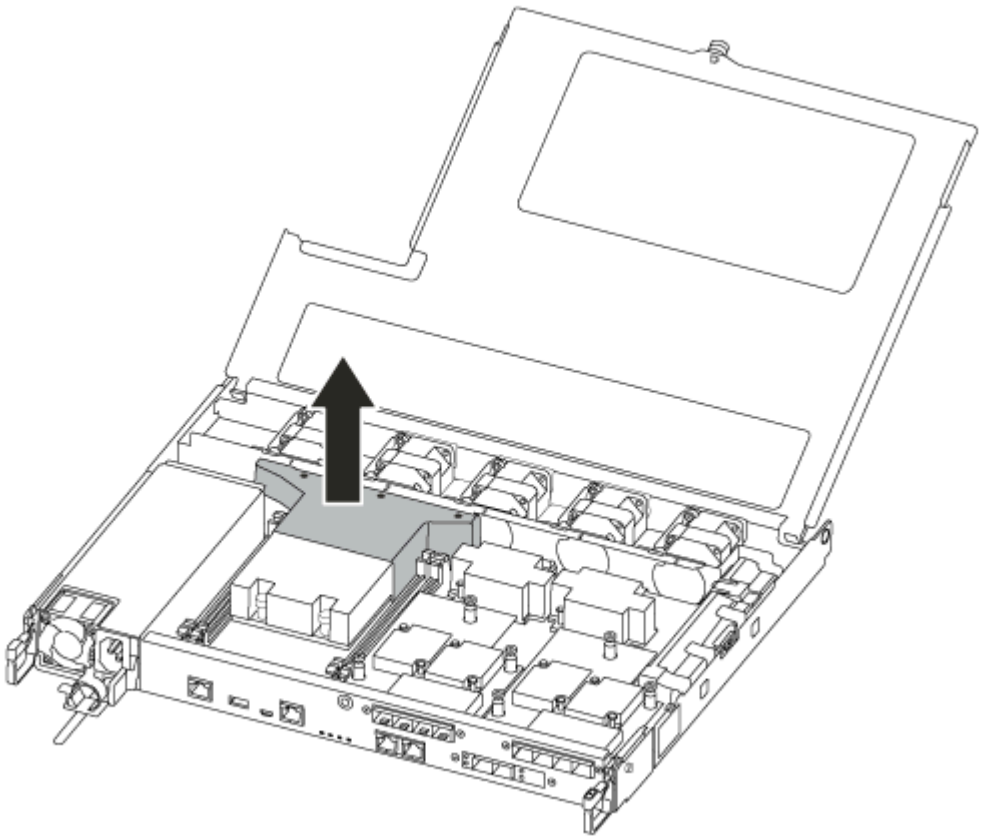

Replacing or installing a mezzanine card

To replace a mezzanine card, which is also referred to as a host interface card (HIC), you must remove the impaired card and install the replacement card; to install a mezzanine card, you must remove the face plate and install the new card.

A video for this task is available at:

- YouTube: https://www.youtube.com/playlist?list=PLYV5R7hVcs-C8THdP1nmPF25RWwGRta3v

To replace a mezzanine card:

Step 1. Locate the mezzanine cards from your impaired controller module.

Step 2. Unplug any cabling associated with the mezzanine card.

Step 3. Make sure that you label the cables so that you know where they came from.

Step 4. Use either your thumb or a Phillips head screwdriver to unscrew the thumbscrew on the mezzanine card that attaches it to the system planar.

Step 5. Gently lift the mezzanine card out of the socket and set it aside.

To install a mezzanine card:

Step 6. Remove the new mezzanine card from the anti-static bag.

Step 7. Gently align the mezzanine card into place in the controller.

Step 8. Use either your thumb or a Phillips head screwdriver to screw down the mezzanine card to the system planar.

Reinstalling the controller module

After you replace a component within the controller module, you must reinstall the controller module in the system chassis and boot it.

A video for this task is available at:

- YouTube: https://www.youtube.com/playlist?list=PLYV5R7hVcs-C8THdP1nmPF25RWwGRta3v

Step 1. Close the controller module cover and tighten the thumbscrew.

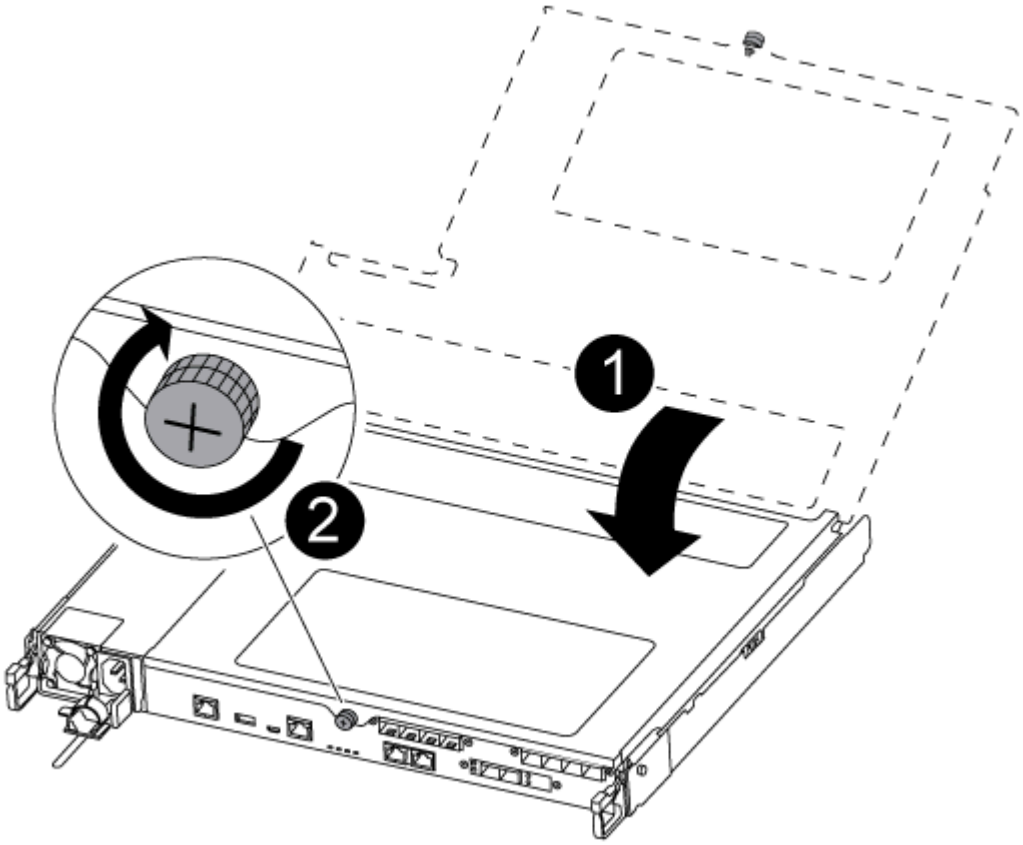

1	Controller module cover
2	Thumbscrew

Step 2. Insert the controller module into the chassis:

a. Ensure the latching mechanism arms are locked in the fully extended position.

b. Using both hands, align and gently slide the controller module into the latching mechanism arms until it stops.

c. Cross your arms and place your index fingers through the finger holes from the inside of the latching mechanism.

d. Press your thumbs down on the orange tabs on top of the latching mechanism and gently push the controller module over the stop.

e. Release your thumbs from the top of the latching mechanisms and continue pushing until the latching mechanisms snap into place.

The controller module begins to boot as soon as it is fully seated in the chassis. Be prepared to interrupt the boot process.

The controller module should be fully inserted and flush with the edges of the chassis.

Step 3. Recable the system, as needed.

Step 4. Return the node to normal operation by giving back its storage from the running node: `storage failover giveback -ofnode` *impaired_node_name*

Note: This should be done when the impaired node shows "Waiting for giveback..."

Step 5. If automatic giveback was disabled, reenable it: `storage failover modify -node local -auto-giveback true`

Completing the replacement process

After you replace the part, you can return the failed part to Lenovo, as described in the RMA instructions shipped with the kit.Contact technical support at Lenovo Data Center Support if you need the RMA number or additional help with the replacement procedure.

Step 1. Recable the system storage and networking cables, as needed.

Step 2. Reconnect the power supply.

a. Open the power cable retainer and plug the power cable into the power supply.

b. Plug the power cable into the power source.

Step 3. Return the node to normal operation by giving back its storage from the running node: `storage failover giveback -ofnode impaired_node_name`

Note: This operation need to be performed when the impaired node shows "`Waiting for giveback...`".

Step 4. If automatic giveback was disabled, reenable it: `storage failover modify -node local -auto-giveback true`

Replacing the NVMEM battery

To replace an NVMEM battery in the system, you must remove the controller module from the system, open it, replace the battery, and close and replace the controller module.

All other components in the system must be functioning properly; if not, you must contact technical support.

Shutting down the impaired controller

You can shut down or take over the impaired controller using different procedures, depending on the storage system hardware configuration.

Shutting down the impaired node

To shut down the impaired node, you must determine the status of the node and, if necessary, take over the node so that the healthy node continues to serve data from the impaired node storage.

- If you have a cluster with more than two nodes, it must be in quorum. If the cluster is not in quorum or a healthy node shows false for eligibility and health, you must correct the issue before shutting down the impaired node.

  ONTAP System Administration Reference

Step 1. If the impaired node is part of an HA pair, disable automatic giveback from the console of the healthy node: `storage failover modify -node local -auto-giveback false`

Step 2. Take the impaired node to the LOADER prompt:

If the impaired node is displaying...	Then...
The LOADER prompt	Go to the next step.
`Waiting for giveback...`	Press Ctrl-C, and then respond `y`.
System prompt or password prompt (enter system password)	Take over or halt the impaired node: `storage failover takeover -ofnode` *impaired_node_name* When the impaired node shows `Waiting for giveback...`, press Ctrl-C, and then respond `y`.

Removing the controller module

You must remove the controller module from the chassis when you replace a component inside the controller module.

Make sure that you label the cables so that you know where they came from.

A video for this task is available at:

- YouTube: https://www.youtube.com/playlist?list=PLYV5R7hVcs-C8THdP1nmPF25RWwGRta3v

Step 1. If you are not already grounded, properly ground yourself.

Step 2. Unplug the controller module power supplies from the source.

Step 3. Release the power cable retainers, and then unplug the cables from the power supplies.

Step 4. Remove the storage and networking cables.

Step 5. Insert your forefinger into the latching mechanism on either side of the controller module, press the lever with your thumb, and gently pull the controller a few inches out of the chassis.

Note: If you have difficulty removing the controller module, place your index fingers through the finger holes from the inside (by crossing your arms)

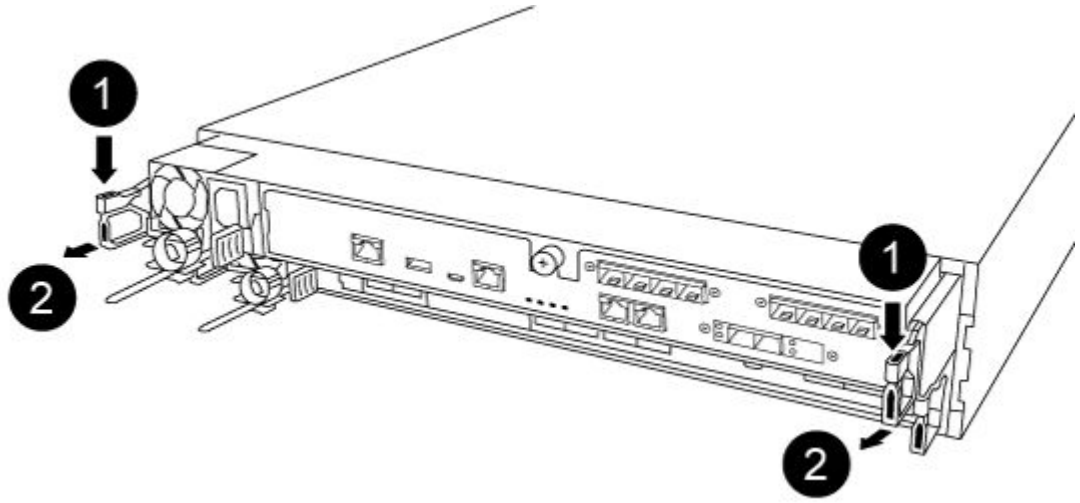

1	Lever
2	Latching mechanism

Step 6. Using both hands, grasp the controller module sides and gently pull it out of the chassis and set it on a flat, stable surface.

Step 7. Turn the thumbscrew on the front of the controller module anti-clockwise and open the controller

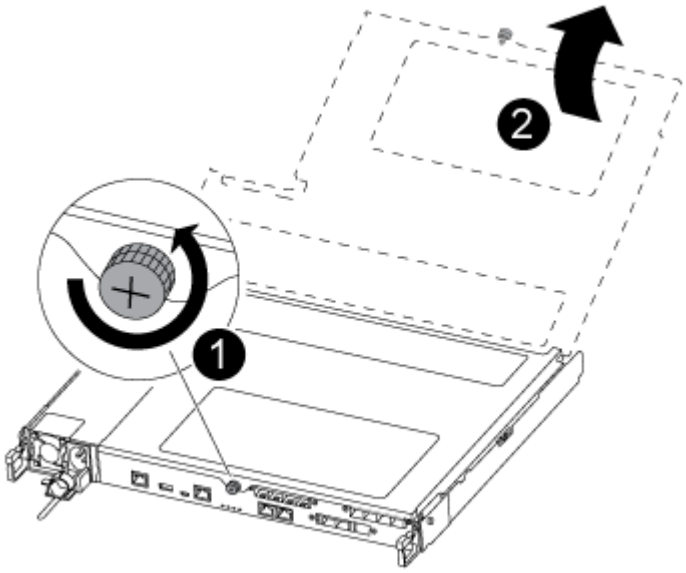

module cover.

1	Thumbscrew
2	Controller module cover

Replacing the NV battery

To replace the NV battery, you must remove the failed battery from the controller module and install the replacement battery into the controller module.

A video for this task is available at:

- YouTube: https://www.youtube.com/playlist?list=PLYV5R7hVcs-C8THdP1nmPF25RWwGRta3v

Step 1. Locate and replace the impaired NVMEM battery on your controller module.

Note: It is recommended that you follow the illustrated instructions in the order listed.

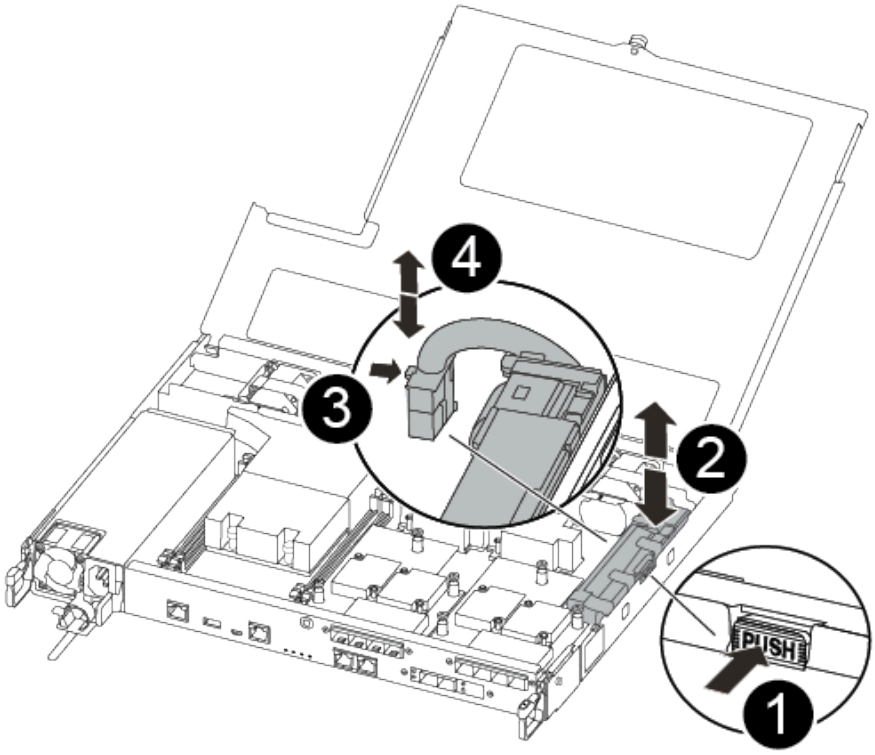

1	Squeeze the clip on the face of the battery plug.
2	Unplug the battery cable from the socket.
3	Grasp the battery and press the blue locking tab marked PUSH.
4	Lift the battery out of the holder and controller module.

a. Locate the battery plug and squeeze the clip on the face of the battery plug to release the plug from the socket.
b. Grasp the battery and press the blue locking tab marked PUSH, and then lift the battery out of the holder and controller module and set it aside.
c. Remove the replacement NV battery from the antistatic shipping bag and align it to the battery holder.
d. Insert the replacement NV battery plug into the socket.
e. Slide the battery pack down along the sheet metal side wall until the support tabs on the side wall hook into the slots on the battery pack, and the battery pack latch engages and clicks into the opening on the side wall.
f. Press firmly down on the battery pack to make sure that it is locked into place.

Installing the controller module

After you have replaced the component in the controller module, you must re-install the controller module into the chassis, and then boot it to Maintenance mode.

You can use the following steps to install the replacement controller module in the chassis.

A video for this task is available at:

- YouTube: https://www.youtube.com/playlist?list=PLYV5R7hVcs-C8THdP1nmPF25RWwGRta3v

Step 1. Close the controller module cover and tighten the thumbscrew.

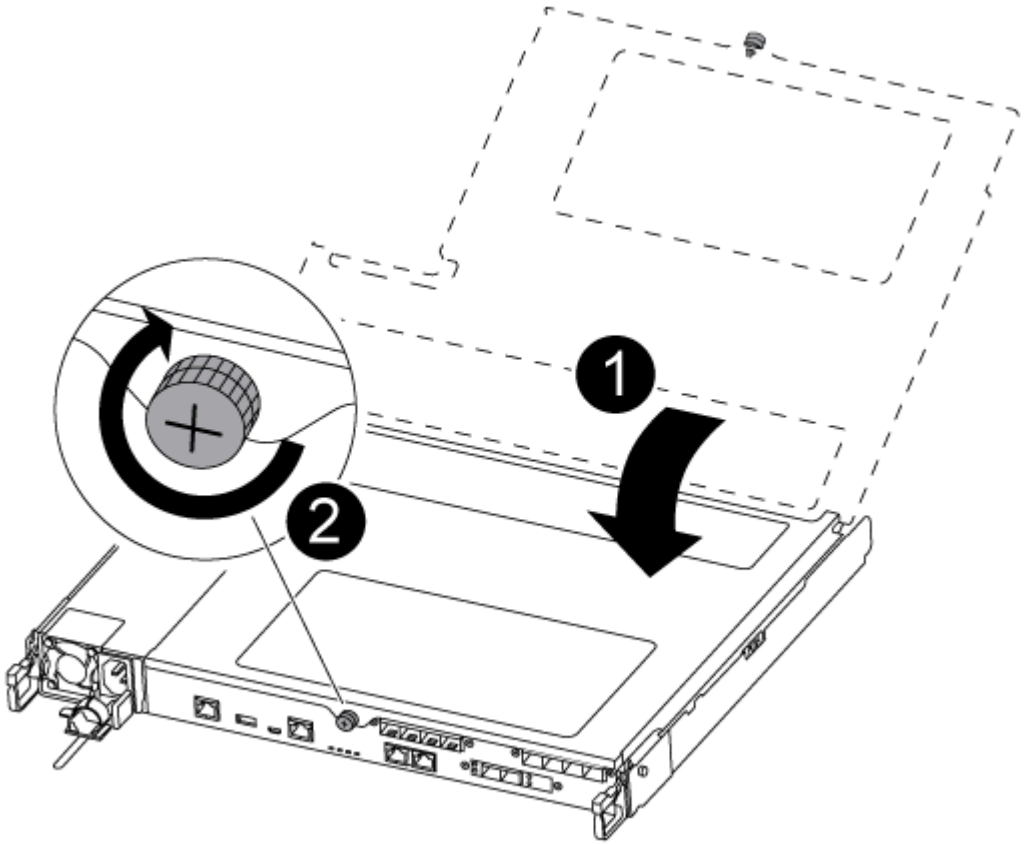

1	Controller module cover
2	Thumbscrew

Step 2. Insert the controller module into the chassis:

a. Ensure the latching mechanism arms are locked in the fully extended position.

b. Using both hands, align and gently slide the controller module into the latching mechanism arms until it stops.

c. Cross your arms and place your index fingers through the finger holes from the inside of the latching mechanism.

d. Press your thumbs down on the orange tabs on top of the latching mechanism and gently push the controller module over the stop.

e. Release your thumbs from the top of the latching mechanisms and continue pushing until the latching mechanisms snap into place.
The controller module begins to boot as soon as it is fully seated in the chassis. Be prepared to interrupt the boot process.

The controller module should be fully inserted and flush with the edges of the chassis.

Step 3. Cable the management and console ports only, so that you can access the system to perform the tasks in the following sections.

Note: You will connect the rest of the cables to the controller module later in this procedure.

Running diagnostics

After you have replaced a component in your system, you should run diagnostic tests on that component.

Your system must be at the LOADER prompt to start diagnostics.

All commands in the diagnostic procedures are issued from the node where the component is being replaced.

Step 1. If the node to be serviced is not at the LOADER prompt, reboot the node: `system node halt -node` *node_name*After you issue the command, you should wait until the system stops at the LOADER prompt.

Step 2. At the LOADER prompt, access the special drivers specifically designed for system-level diagnostics to function properly: `boot_diags`

Step 3. Select **Scan System** from the displayed menu to enable running the diagnostics tests.

Step 4. Select **Test system** from the displayed menu to run diagnostics tests.

Step 5. Proceed based on the result of the preceding step:

- If the scan show problems, correct the issue, and then rerun the scan.
- If the scan reported no failures, select `Reboot` from the menu to reboot the system.

Completing the replacement process

After you replace the part, you can return the failed part to Lenovo, as described in the RMA instructions shipped with the kit.Contact technical support at Lenovo Data Center Support if you need the RMA number or additional help with the replacement procedure.

Step 1. Recable the system storage and networking cables, as needed.

Step 2. Reconnect the power supply.

a. Open the power cable retainer and plug the power cable into the power supply.

b. Plug the power cable into the power source.

Step 3. Return the node to normal operation by giving back its storage from the running node: `storage failover giveback -ofnode impaired_node_name`

Note: This operation need to be performed when the impaired node shows "`Waiting for giveback...`".

Step 4. If automatic giveback was disabled, reenable it: `storage failover modify -node local -auto-giveback true`

Replacing the chassis

All other components in the system must be functioning properly; if not, you must contact technical support.

- You can use this procedure with all versions of ONTAP supported by your system.
- This procedure is disruptive. For a two-node cluster, you will have a complete service outage and a partial outage in a multi-node cluster.

Shutting down the controllers when replacing a chassis

You must shut down the controllers before replacing the chassis.

Shutting down the nodes

You must shut down the nodes in the chassis prior to moving them to the new chassis.

- If you have a cluster with more than two nodes, it must be in quorum. If the cluster is not in quorum or a healthy node shows false for eligibility and health, you must correct the issue before shutting down the impaired node.

  ONTAP System Administration Reference

Step 1. Disable the HA pair.

If your system is running clustered ONTAP with...	Then...
Two nodes in the cluster	`cluster ha modify -configured false storage failover modify -node node0 -enabled false`
More than two nodes in the cluster	`storage failover modify -node node0 -enabled false`

Step 2. Halt the node, pressing `y` when you are prompted to confirm the halt: `system node halt -node` *node_name*The confirmation message looks like the following:

```
Warning: Rebooting or halting node
"node_name" in an HA-enabled cluster may result in client disruption or data access
failure. To ensure continuity of service, use the "storage
failover takeover" command. Are you sure you want to halt node
"node_name"? {y|n}:
```

Attention: You must perform a clean system shutdown before replacing chassis to avoid losing unwritten data in the nonvolatile memory (NVRAM). If the NVRAM LED is flashing, there is content in the NVRAM that has not been saved to disk. You need to reboot the controller module and start from the beginning of this procedure. If repeated attempts to cleanly shut down the controller module fail, be aware that you might lose any data that was not saved to disk.

Step 3. Where applicable, halt the second node to avoid a possible quorum error message in an HA pair configuration:: `system node halt -node` *second_node_name* `-ignore-quorum-warnings true`

Removing the controller modules

To replace the chassis, you must remove the controller modules from the old chassis.

A video for this task is available at:

- YouTube: https://www.youtube.com/playlist?list=PLYV5R7hVcs-C8THdP1nmPF25RWwGRta3v

Step 1. If you are not already grounded, properly ground yourself.

Step 2. Unplug the controller module power supplies from the source.

Step 3. Release the power cable retainers, and then unplug the cables from the power supplies.

Step 4. Remove the storage and networking cables.

Step 5. Insert your forefinger into the latching mechanism on either side of the controller module, press the lever with your thumb, and gently pull the controller a few inches out of the chassis.

Note: If you have difficulty removing the controller module, place your index fingers through the finger holes from the inside (by crossing your arms)

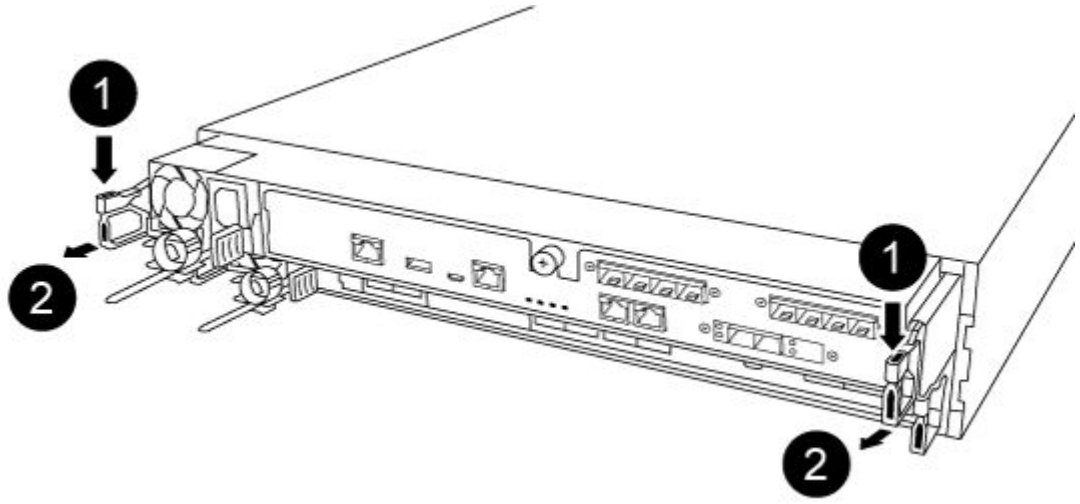

1	Lever
2	Latching mechanism

Step 6. Using both hands, grasp the controller module sides and gently pull it out of the chassis and set it on a flat, stable surface.

Step 7. Set the controller module aside in a safe place, and repeat these steps for the other controller module in the chassis.

Moving drives to the new chassis

You need to move the drives from each bay opening in the old chassis to the same bay opening in the new chassis.

A video for this task is available at:

- YouTube: https://www.youtube.com/playlist?list=PLYV5R7hVcs-C8THdP1nmPF25RWwGRta3v

Step 1. Gently remove the bezel from the front of the system.

Step 2. Remove the drives:

a. Press the release button at the top of the carrier face below the LEDs.

b. Pull the cam handle to its fully open position to unseat the drive from the midplane, and then gently slide the drive out of the chassis.

The drive should disengage from the chassis, allowing it to slide free of the chassis.

Attention: When removing a drive, always use two hands to support its weight.

Attention: Drives are fragile. Handle them as little as possible to prevent damage to them.

Step 3. Align the drive from the old chassis with the same bay opening in the new chassis.

Step 4. Gently push the drive into the chassis as far as it will go. The cam handle engages and begins to rotate upward.

Step 5. Firmly push the drive the rest of the way into the chassis, and then lock the cam handle by pushing it up and against the drive holder. Be sure to close the cam handle slowly so that it aligns correctly with the front of the drive carrier. It will click when it is secure.

Step 6. Repeat the process for the remaining drives in the system.

Replacing a chassis from within the equipment rack or system cabinet

You must remove the existing chassis from the equipment rack or system cabinet before you can install the replacement chassis.

A video for this task is available at:

- YouTube: https://www.youtube.com/playlist?list=PLYV5R7hVcs-C8THdP1nmPF25RWwGRta3v

Step 1. Remove the screws from the chassis mount points.

Step 2. With two people, slide the old chassis off the rack rails in a system cabinet or equipment rack, and then set it aside.

Step 3. If you are not already grounded, properly ground yourself.

Step 4. Using two people, install the replacement chassis into the equipment rack or system cabinet by guiding the chassis onto the rack rails in a system cabinet or equipment rack.

Step 5. Slide the chassis all the way into the equipment rack or system cabinet.

Step 6. Secure the front of the chassis to the equipment rack or system cabinet, using the screws you removed from the old chassis.

Step 7. If you have not already done so, install the bezel.

Installing the controller modules

After you install the controller modules into the new chassis, you need to boot it to a state where you can run the diagnostic test.

For HA pairs with two controller modules in the same chassis, the sequence in which you install the controller module is especially important because it attempts to reboot as soon as you completely seat it in the chassis.

A video for this task is available at:

- YouTube: https://www.youtube.com/playlist?list=PLYV5R7hVcs-C8THdP1nmPF25RWwGRta3v

Step 1. Align the end of the controller module with the opening in the chassis, and then gently push the controller module halfway into the system.

Note: Do not completely insert the controller module in the chassis until instructed to do so.

Step 2. Recable the console to the controller module, and then reconnect the management port.

Step 3. Plug the power cables into the power supplies and reinstall the power cable retainers.

Step 4. Insert the controller module into the chassis:

a. Ensure the latching mechanism arms are locked in the fully extended position.

b. Using both hands, align and gently slide the controller module into the latching mechanism arms until it stops.

c. Cross your arms and place your index fingers through the finger holes from the inside of the latching mechanism.

d. Press your thumbs down on the orange tabs on top of the latching mechanism and gently push the controller module over the stop.

e. Release your thumbs from the top of the latching mechanisms and continue pushing until the latching mechanisms snap into place.

The controller module begins to boot as soon as it is fully seated in the chassis. Be prepared to interrupt the boot process.

The controller module should be fully inserted and flush with the edges of the chassis.

Step 5. Repeat the preceding steps to install the second controller into the new chassis.

Running diagnostics

After you have replaced a component in your system, you should run diagnostic tests on that component.

Your system must be at the LOADER prompt to start diagnostics.

All commands in the diagnostic procedures are issued from the node where the component is being replaced.

Step 1. If the node to be serviced is not at the LOADER prompt, reboot the node: `system node halt -node` *node_name*After you issue the command, you should wait until the system stops at the LOADER prompt.

Step 2. At the LOADER prompt, access the special drivers specifically designed for system-level diagnostics to function properly: `boot_diags`

Step 3. Select **Scan System** from the displayed menu to enable running the diagnostics tests.

Step 4. Select **Test system** from the displayed menu to run diagnostics tests.

Step 5. Proceed based on the result of the preceding step:

- If the test failed, correct the failure, and then rerun the test.
- If the test reported no failures, select `Reboot` from the menu to reboot the system.

Completing the replacement process

After you replace the part, you can return the failed part to Lenovo, as described in the RMA instructions shipped with the kit.Contact technical support at Lenovo Data Center Support if you need the RMA number or additional help with the replacement procedure.

Step 1. Recable the system storage and networking cables, as needed.

Step 2. Reconnect the power supply.

a. Open the power cable retainer and plug the power cable into the power supply.

b. Plug the power cable into the power source.

Step 3. Return the node to normal operation by giving back its storage from the running node: `storage failover giveback -ofnode impaired_node_name`

Note: This operation need to be performed when the impaired node shows "`Waiting for giveback...`".

Step 4. If automatic giveback was disabled, reenable it: `storage failover modify -node local -auto-giveback true`

Chapter 5. System level diagnostics

Introduction to system-level diagnostics

DG5000 System-level diagnostics provides a menu-driven interface for tests that search for and determine hardware problems on supported storage systems. You use system-level diagnostics to confirm that a specific component is operating properly or to help identify faulty components. DG5000 system-level diagnostics is specifically designed for DG5000 storage systems only.

You run system-level diagnostics after one of the following common troubleshooting situations:

- Initial system installation
- Addition or replacement of hardware components
- System panic caused by an unidentified hardware failure
- Access to a specific device becomes intermittent or the device becomes unavailable

To access system-level diagnostics for the storage system, you must directly connect to the serial console port of the storage system or access the serial console remotely via the Baseband Management Controller (BMC) of the storage system. Then, take over or halt the storage system to reach the LOADER prompt. Once at the LOADER prompt, enter the `boot_diags` command to start system-level diagnostics.

From the main menu of system-level diagnostics, the following choices are available:

- **Scan system** — Scan the system to obtain an accurate H/W inventory of the system for subsequent testing
- **Test system** — Test specific components or the entire system for proper operation.
- **Show VPD information** — Display vital product data (VPD) for components in the system.
- **Show FW revision** — Display the firmware revisioninformation for components in the system.
- **Show MAC address** — Display the unique MAC addresses allocated to components in the system.
- **Show logs** — Display a recorded log of previousscan and test results.
- **Reboot (BMC power cycle) controller to LOADER** — Exit system-level diagnostics and return to the LOADER prompt.
- **Scan system** — Scan the system to obtain an accurate H/W inventory of the system for subsequent testing

Once a menu command is chosen, all output is displayed on the console session. Terminal session logging can be used to conveniently capture test results and other displayed information. In addition, system scans, system tests and memory tests are persistently logged on the boot media. The last ten results for each scan or test command are available for review.

If test results complete successfully, you can exit system-level diagnostics and reboot the system for normal operation. In the event of test failures, the test results will help technical support make appropriate recommendations. The failure could be resolved by reinstalling the FRU. If the failure cannot be resolved, then there is a likely hardware failure and the affected hardware must be replaced.

Scan system

When you scan the system, system-level diagnostics obtains an accurate hardware inventory of the system. You must scan the system first, before you run any tests. To execute the "Scan system" operation, type "1" and then press "Enter" to start the system scan.

© Copyright Lenovo 2023

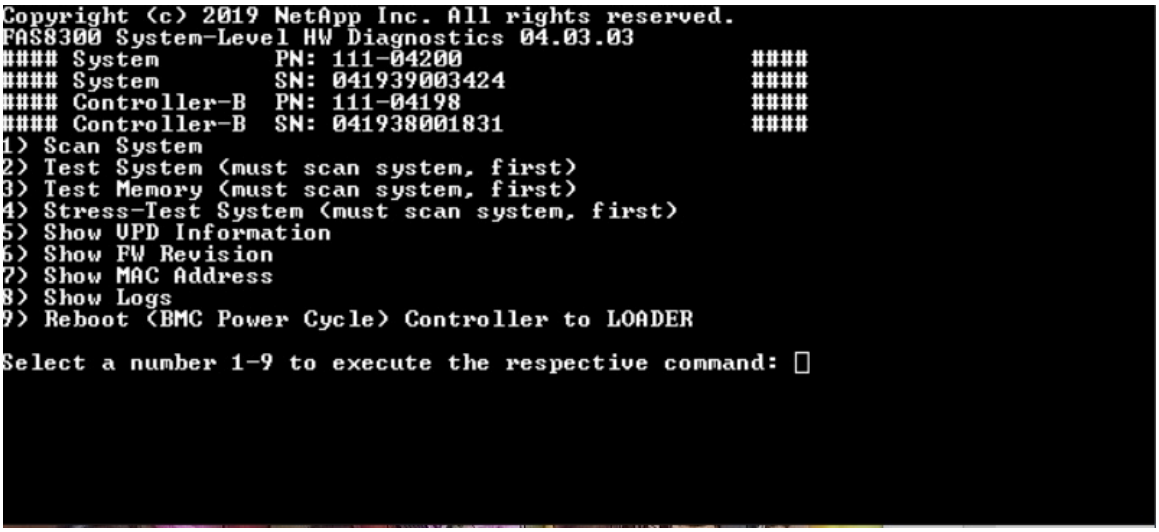

The scan system summary provides general information about the hardware inventory present in the system. Press "Enter" to return to the main menu after the scan is complete.

```
Scan System Summary:
Controller-B PN:TEMP-S000092338      SN:2BJJ0267S00N
        CPU              :Expect: 2 Present: 2 Result:PASSED
        TPM              :Expect: 1 Present: 1 Result:PASSED
        SAS              :Expect: 2 Present: 2 Result:PASSED
        Expander         :Expect: 2 Present: 2 Result:PASSED
        SFPGA            :Expect: 1 Present: 1 Result:PASSED
        Ethernet - I210  :Expect: 2 Present: 2 Result:PASSED
        BMC              :Expect: 1 Present: 1 Result:PASSED

Memory: PASSED
Expect:16 Present:16
slot    PN                    SN
dimm1   SHB724G4LML23P2-SB    3213D720
dimm2   SHB724G4LML23P2-SB    3213C819
dimm3   SHB724G4LML23P2-SB    3213D19E
dimm4   SHB724G4LML23P2-SB    3213D47D
dimm5   SHB724G4LML23P2-SB    3213D13C
dimm6   SHB724G4LML23P2-SB    3213CAC5
dimm7   SHB724G4LML23P2-SB    3213D19F
dimm8   SHB724G4LML23P2-SB    3213CB3F
dimm9   SHB724G4LML23P2-SB    3213CB1A
dimm10  SHB724G4LML23P2-SB    3213CD73
dimm11  SHB724G4LML23P2-SB    3213C84B
dimm12  SHB724G4LML23P2-SB    32149EEA
dimm13  SHB724G4LML23P2-SB    3213D250
dimm14  SHB724G4LML23P2-SB    3213D806
dimm15  SHB724G4LML23P2-SB    3213D44B
dimm16  SHB724G4LML23P2-SB    3213D52D

NVMe: PASSED
Expect: 2 Present: 2
slot    PN                    SN
NVME0   SAMSUNG MZVLV128HCGR S2J4NX0H510081
NVME1   SAMSUNG MZVLV128HCGR S2J4NX0H510038

HBA: PASSED
Expect: 7 Present: 7
slot    description                 PN                SN
1       NVRAM10P Module             031611001295      031615000072
2       32Gb FC HBA-1               111-03249         FC60778265
3       32Gb FC HBA-2               111-03249         FC61004370
4       12Gb SAS HBA                N/A               N/A
5       40GbE NIC HBA               H76496-002        3CFDFE9DCBB8H76496-002
6       40GbE OCP-1                 H52289-004        90E2BABBDF90H52289-004
7       40GbE OCP-2                 H52289-004        90E2BAC7EC30H52289-004

Fan: PASSED
Expect: 8 Present: 8
Fan_1    13536RPM
Fan_2    13728RPM
Fan_3    13632RPM
Fan_4    13632RPM
Fan_5    13632RPM
Fan_6    13536RPM
Fan_7    13632RPM
Fan_8    13632RPM

PSU: PASSED
Expect: 1 Present: 1
slot     PN                  SN
PSU1                         HZBD1625000552
Press [Enter] key to go back to Main Menu
```

Test system

The "Test system" command allows you to specify component-level or system-level testing of the system. One or more iterations or "loops" can be specified, as well. To execute the "Test System" operation, type "2" and then press "Enter" to go to the Test System option page.

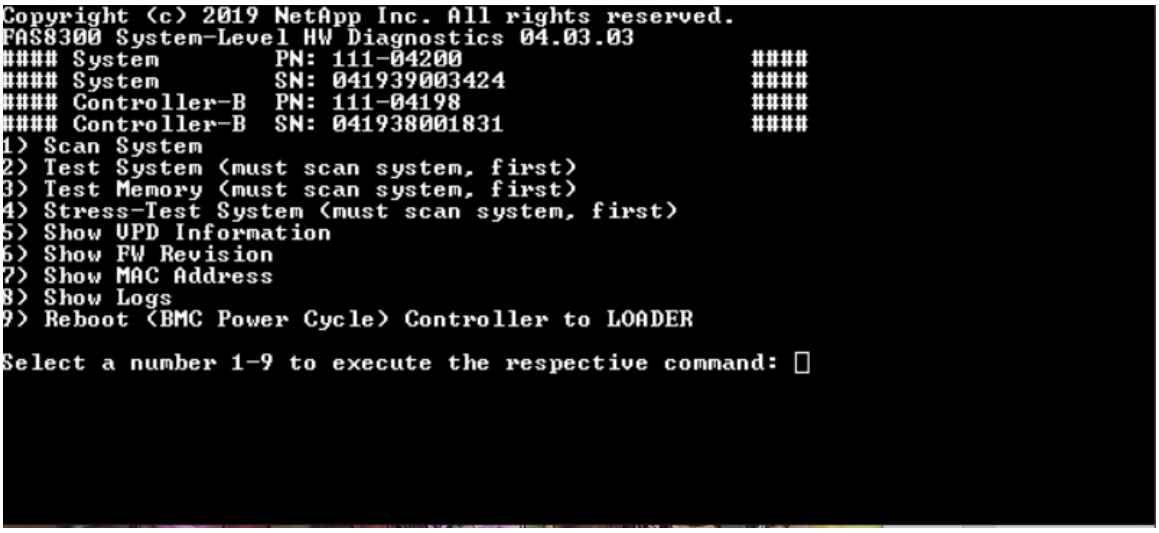

The Test System page is shown, below:

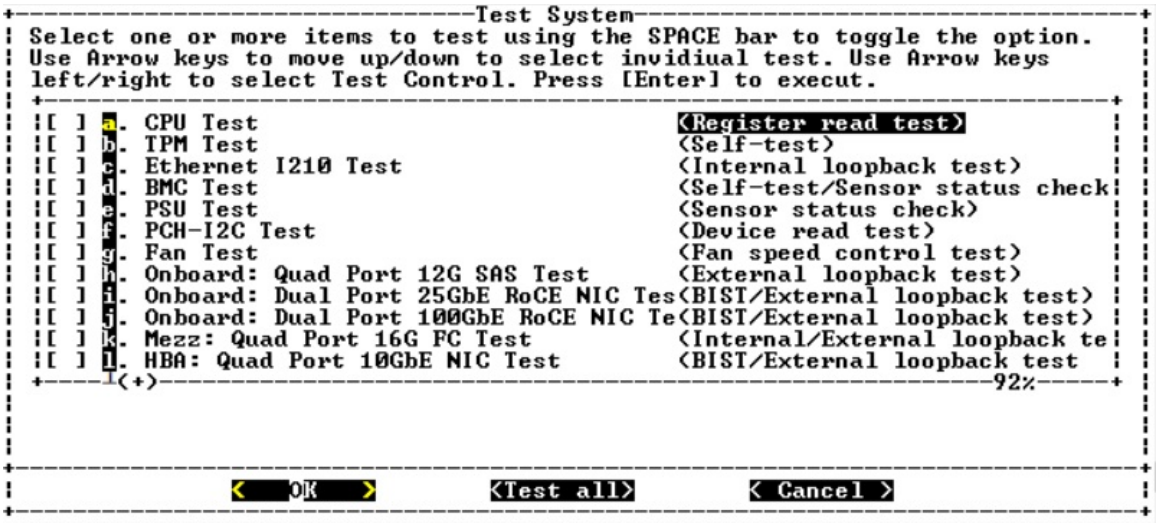

- Use the "up" and "down" arrow keys to selecttest options (fromoption "a" to option "m").

  Note: Scroll down to see all available tests
- Use the left and right arrow keys to select "Run", "Test All" or "Cancel":
- Use the "space" bar to toggle an option on or off.
  - Run– Run the selected tests from the Test System page
  - Test All– Run all available system tests
  - Cancel– Cancel system test and return to the main menu.
- Press "Enter" to execute your choice.

If "Run" or "Test All" is chosen, the "Configure Test Loop" page is displayed.

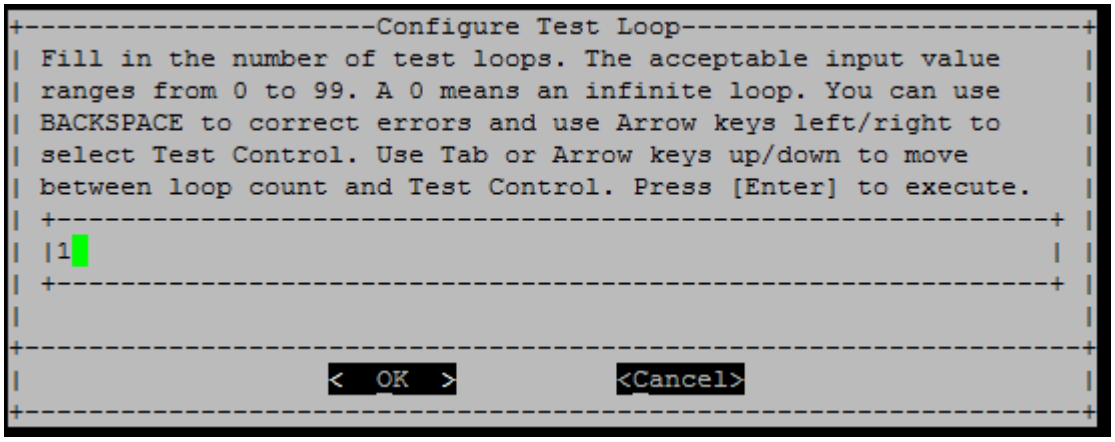

- Enter the number of test loops for the selected tests.
- Use the "Tab" key to switch the cursor between the loop input panel and the page control panel.
- Use the left and right arrow keys to select "OK" or "Cancel".
- Press "Enter" to start the tests.

Test example: Run CPU Test

To only run the CPU test, toggle on option "a. CPU test (Execute stability Test)", select "Run", and then press "Enter".

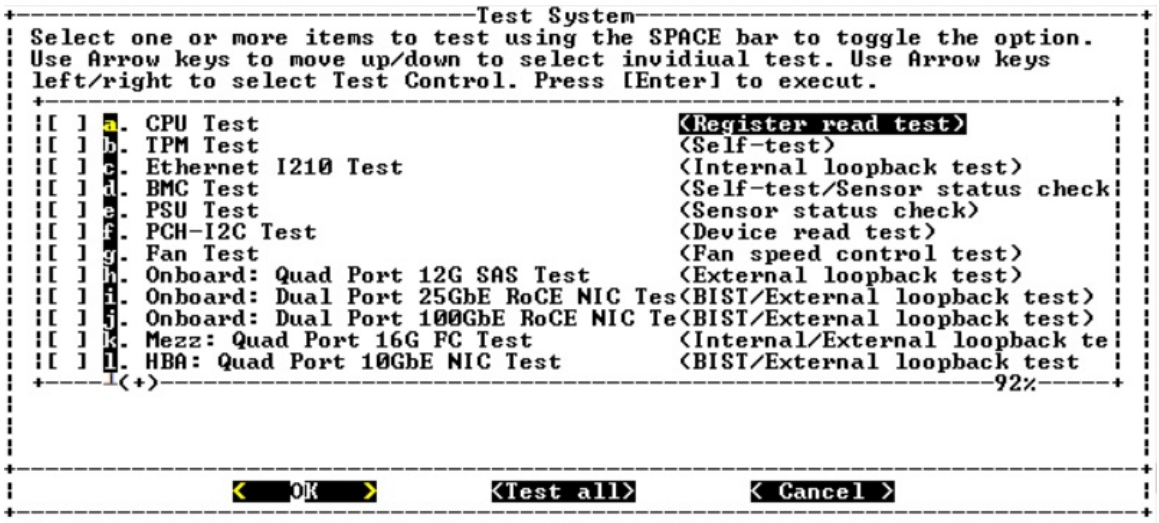

The "Configure Test Loop" page is displayed.

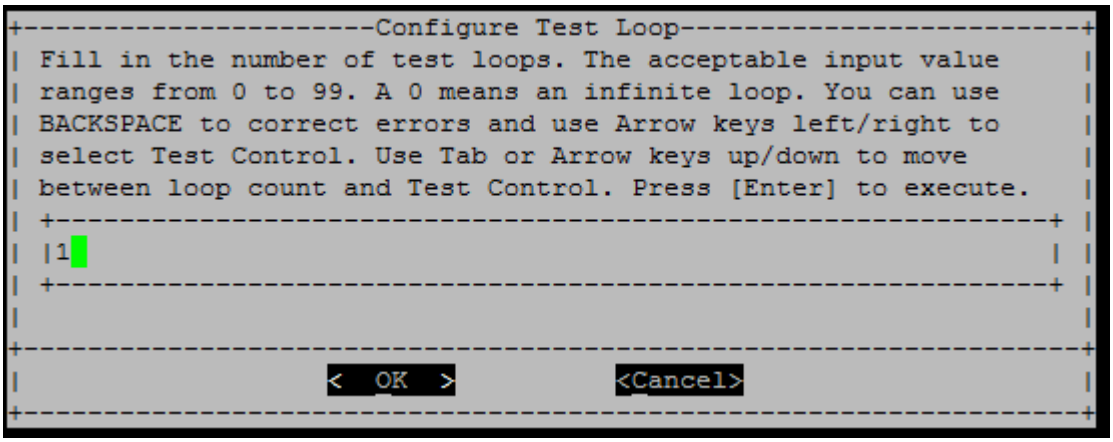

To run one test loop only, retain the default "1" value, press "Tab" to switch contexts to the control panel, select "OK", and then press "Enter" to start the test.

The test results are displayed on the console, as shown below. Press "Enter" to return to the main menu.

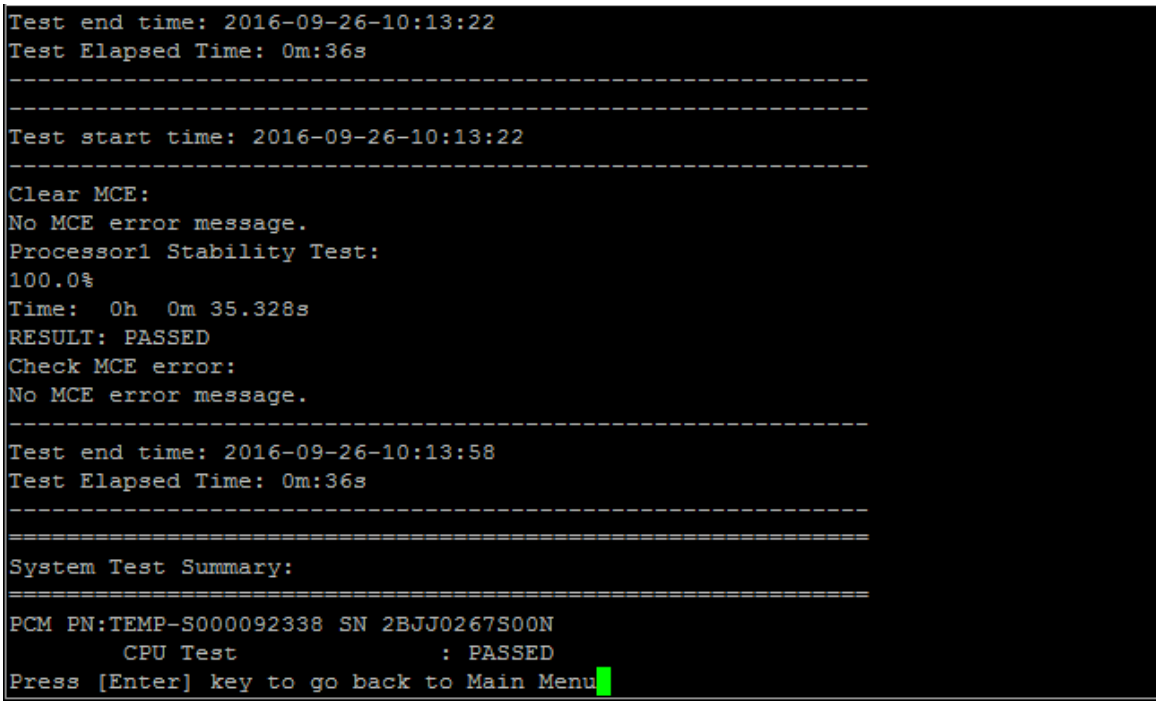

Test memory

The "Test memory" command allows you to run tests on part or all of system memory. To execute the "Test Memory" operation, type "3" and then press "Enter".

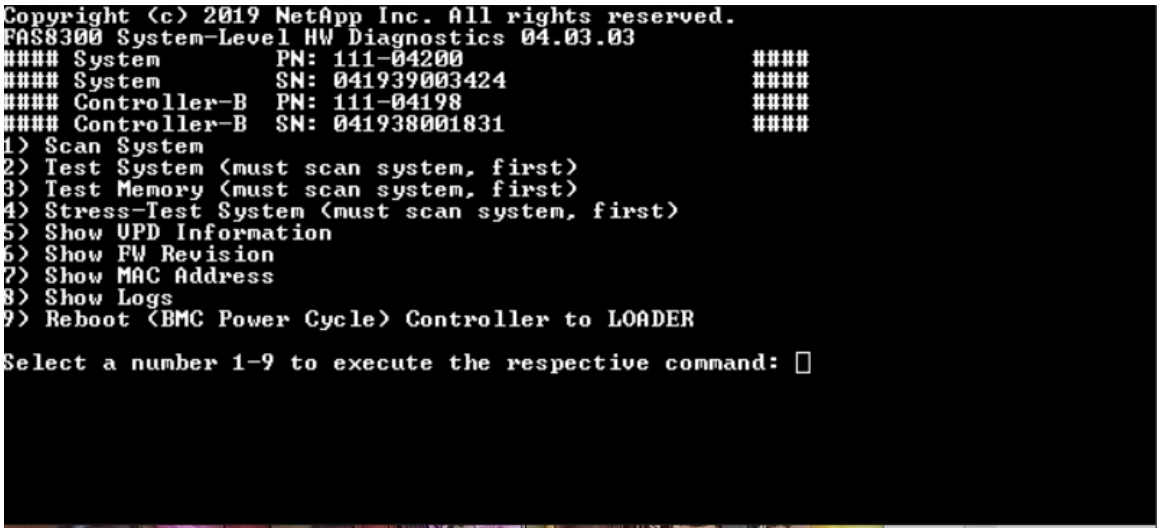

Configure Memory Test Range

Use the Configure Memory Test Range to specify the start and the end addresses for the memory tests.

- Fill in the "Start Address" and "End Address" fields with the desired memory address range (in hexadecimal).
- Use the "Tab" key to switch the cursor between memory address input and the page control panel ("OK" or "Cancel").
- Select "OK" in the control panel, and then press "Enter".

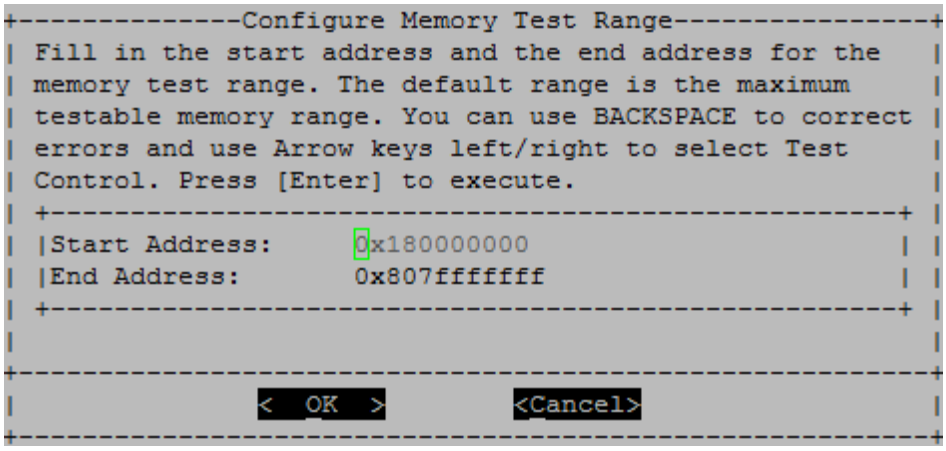

Memory Test Selection and Loop Count

The "Test Memory" page displays the available memory tests:

- Memory Pattern Test – Verifies system memory with a pre-determined pattern
- Memory Random Test – Verifies system memory with randomly generated patterns

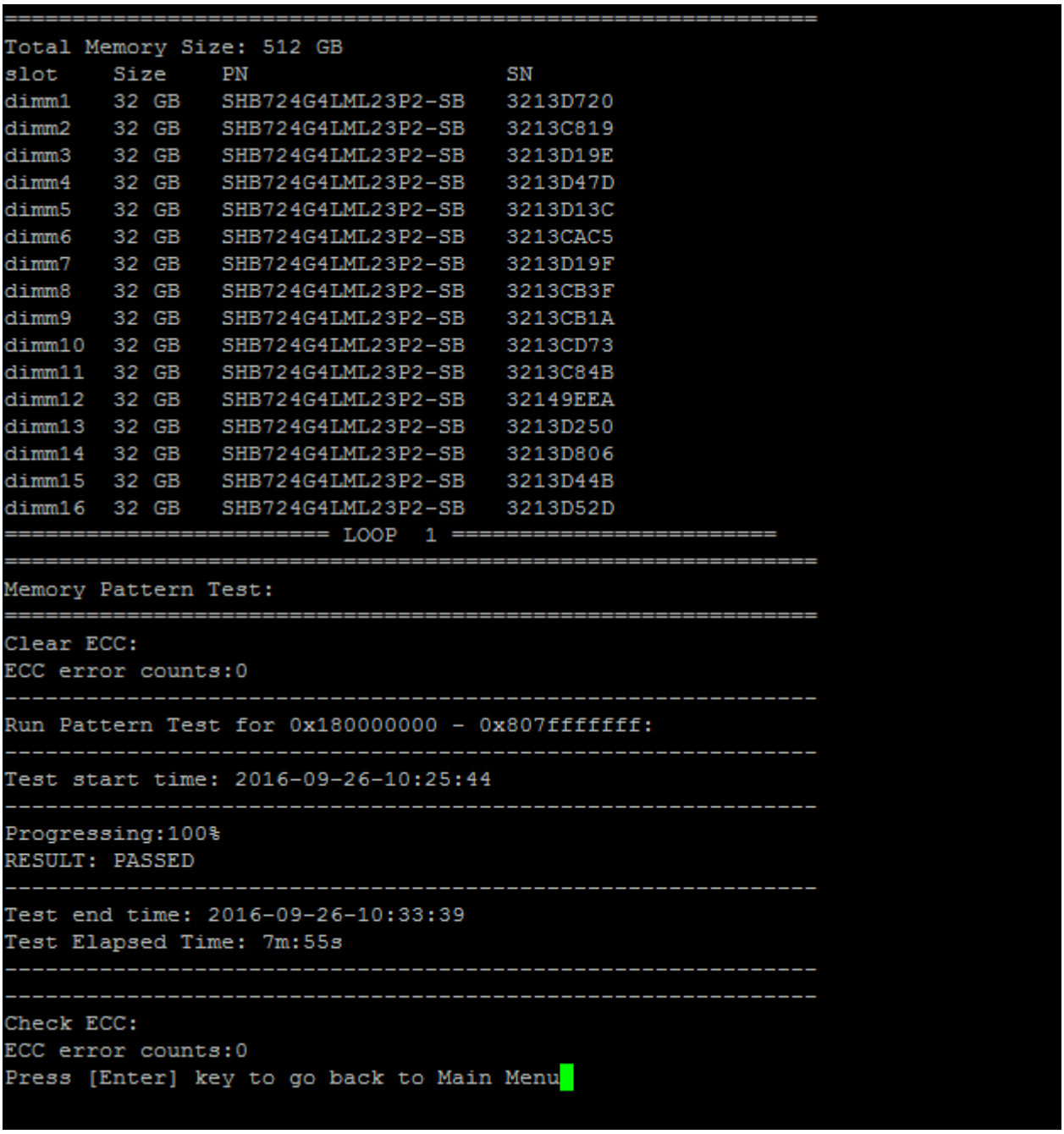

- Use the "up" and "down" arrow keys to select test options "a" or "b"
- Use the "space" bar to toggle an option on or off.
- Use the left and right arrow keys to select "Run" or "Cancel".
- Press "Enter" to execute your choice.

  If "Run" is chosen, the "Configure Test Loop" page is displayed.

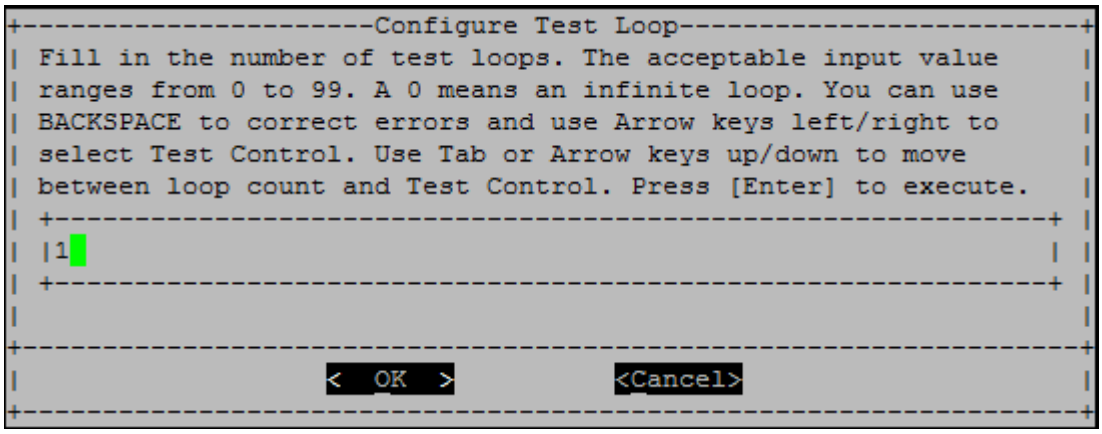

- Enter the number of test loops for the selected tests.

  Note: For the "Memory Random Test", this value specifies the number of seconds spent running the test.
- Use the "Tab" key to switch the cursor between the loop input panel and the page control panel.
- Use the left and right arrow keys to select "OK" or "Cancel".
- Press "Enter" to start the tests.

  The test results are displayed on the console, as shown below. Press "Enter" to return to the main menu.

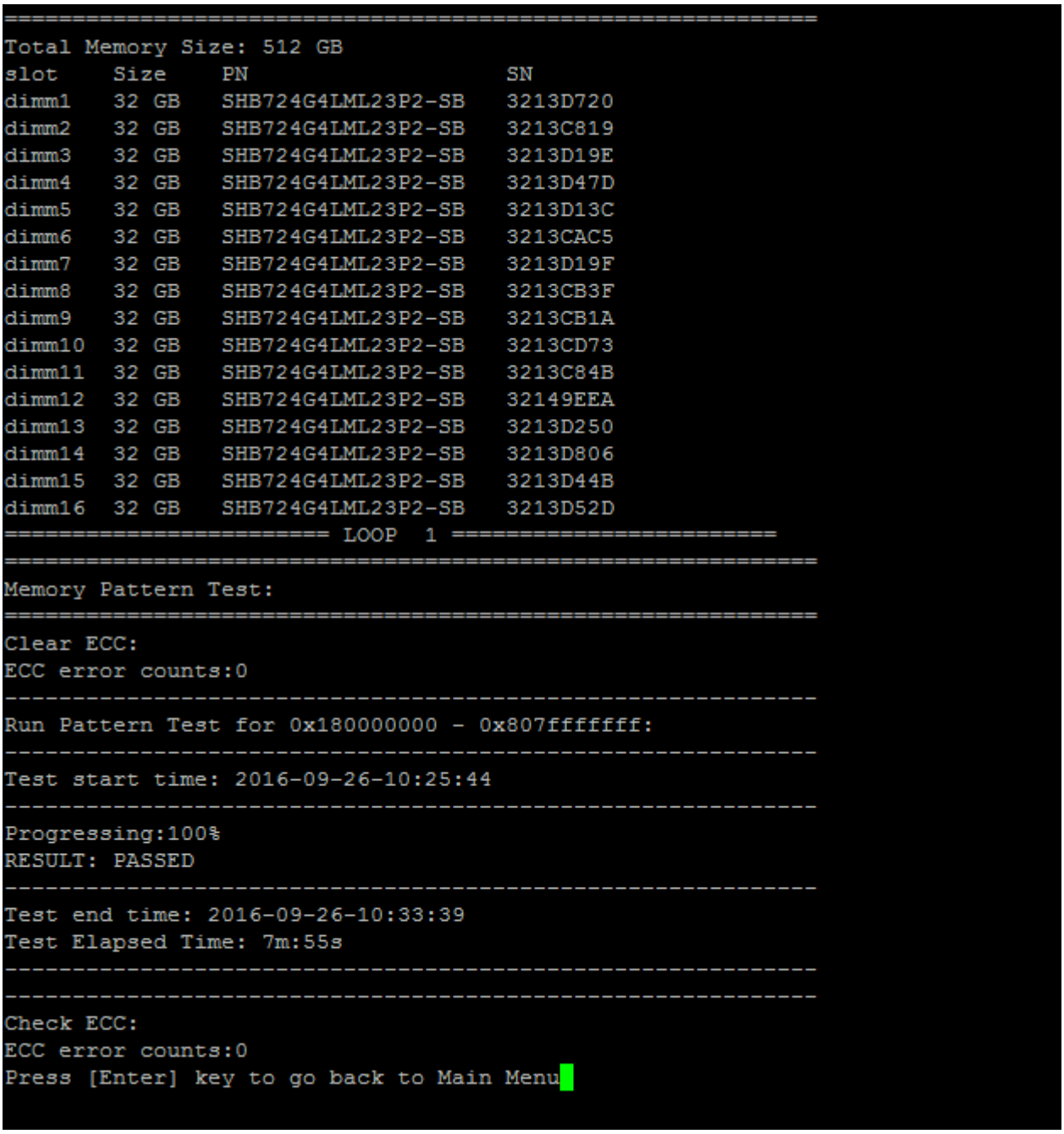

Show VPD information

The "Show VPD information" command displays vital product data (VPD) information for components of the system. To execute the "Show VPD information" operation, type "5" and then press "Enter".

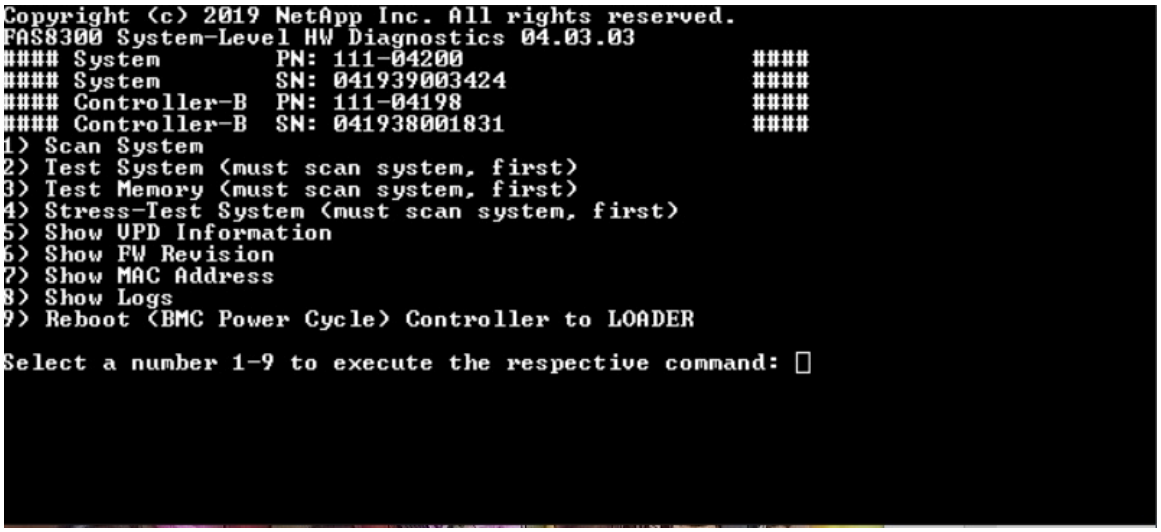

VPD information is displayed. Press "Enter" to return to the main menu.

```
32Gb FC HBA-1:
 Product Name          : Emulex LightPulse LPe32002-M2-NA 2-Port 32Gb Fibre Chan
nel Adapter, FC PF
 PN (Part Number)      : 111-03249
 SN (Serial Number)    : FC62671258
 V0                    : FC62671258
 V1                    : 111-03249 Emulex LightPulse LPe32002-M2-NA 2-Port 32Gb
Fibre Channel Adapter
 V2                    : 111-03249
 V5                    : LPe32002-M2-NA
 V7                    : ID:0294,V:00.00.03.09
32Gb FC HBA-2:
 Product Name          : Emulex LightPulse LPe32002-M2-NA 2-Port 32Gb Fibre Chan
nel Adapter, FC PF
 PN (Part Number)      : 111-03249
 SN (Serial Number)    : FC62787200
 V0                    : FC62787200
 V1                    : 111-03249 Emulex LightPulse LPe32002-M2-NA 2-Port 32Gb
Fibre Channel Adapter
 V2                    : 111-03249
 V5                    : LPe32002-M2-NA
 V7                    : ID:0294,V:00.00.03.09

12Gb SAS HBA:
 Serial number         : 031627002195
 NetApp P/N            : 111-02026
 NetApp Rev.           : B0
 Date                  : 20160703
 Manufacturer          : NetApp, Inc.
 Manufacturer P/N      : 110-00401
 Manufacturer Rev.     : B0
 Driver name           : pm80xx
 major rev             : 1
 minor rev             : 3
 build rev             : 0
 maxdevices            : 3984
 maxoutstandingIO      : 8192
Press [Enter] key to go back to Main Menu
```

Show FW revision

The "Show FW revision" command displays the firmware revision information for components in the system. To execute the "Show FW revision" operation, type "6" and then press "Enter".

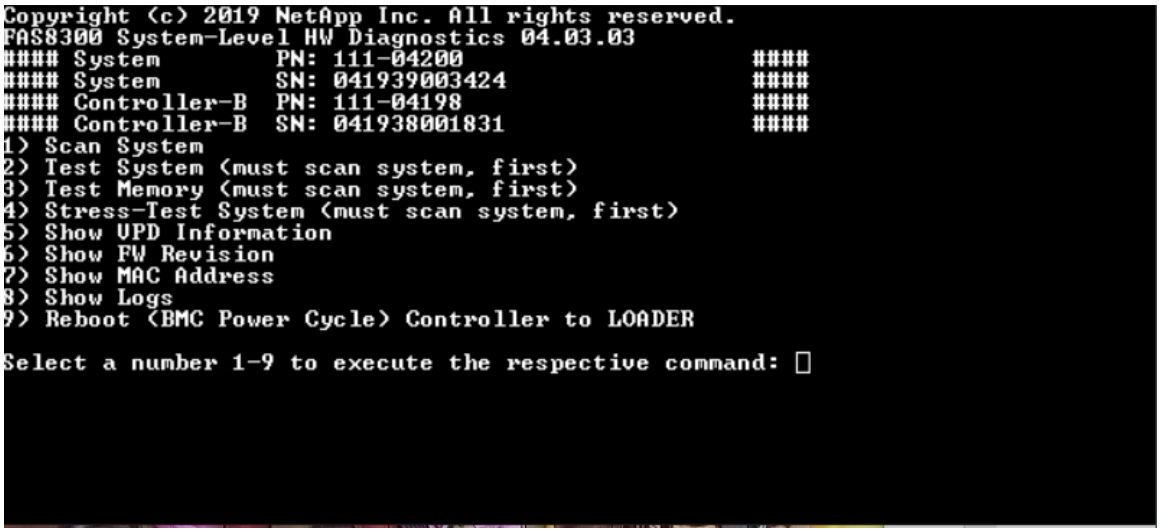

The FW revision is displayed. Press "Enter" to return to the main menu.

Show MAC address

The "Show MAC address" command displays the unique MAC addresses allocated to components in the system. To execute the "Show MAC address" operation, type "7" and then press "Enter".

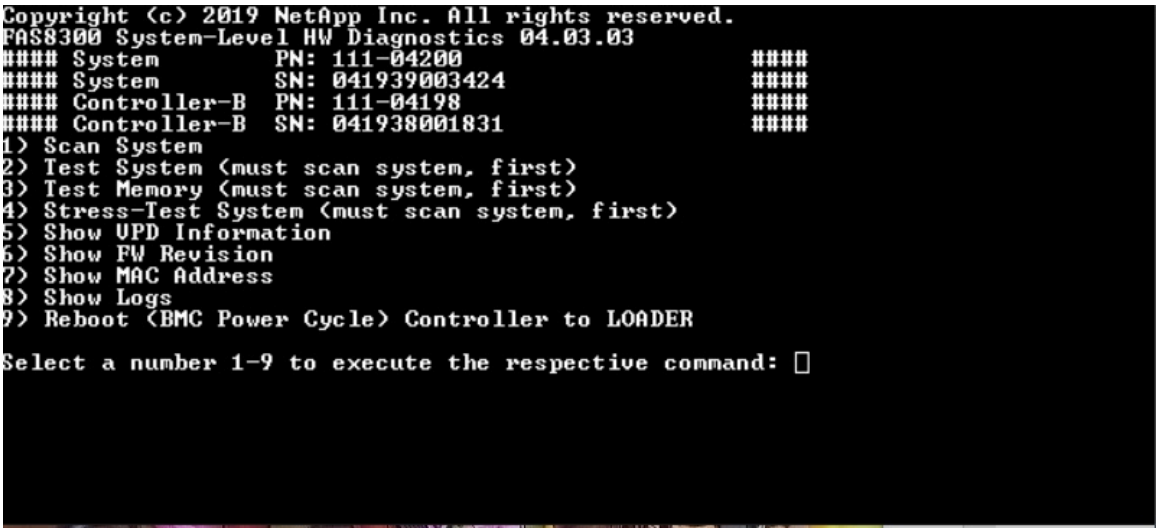

MAC address information is displayed. Press "Enter" to return to the main menu.

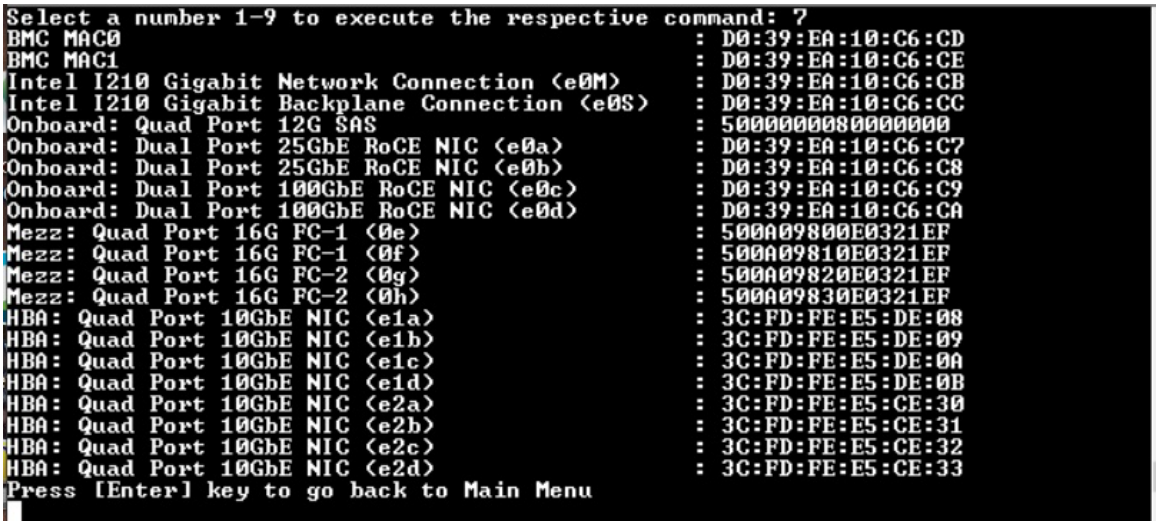

Show logs

The "Show logs" command displays a recorded log of previous scan and test results. System scans, system tests and memory tests are persistently logged on the boot media. The last ten results for each scan or test command are available for review.

To execute the "Show logs" operation, type "8" and then press "Enter" to go to the "Show Logs" page.

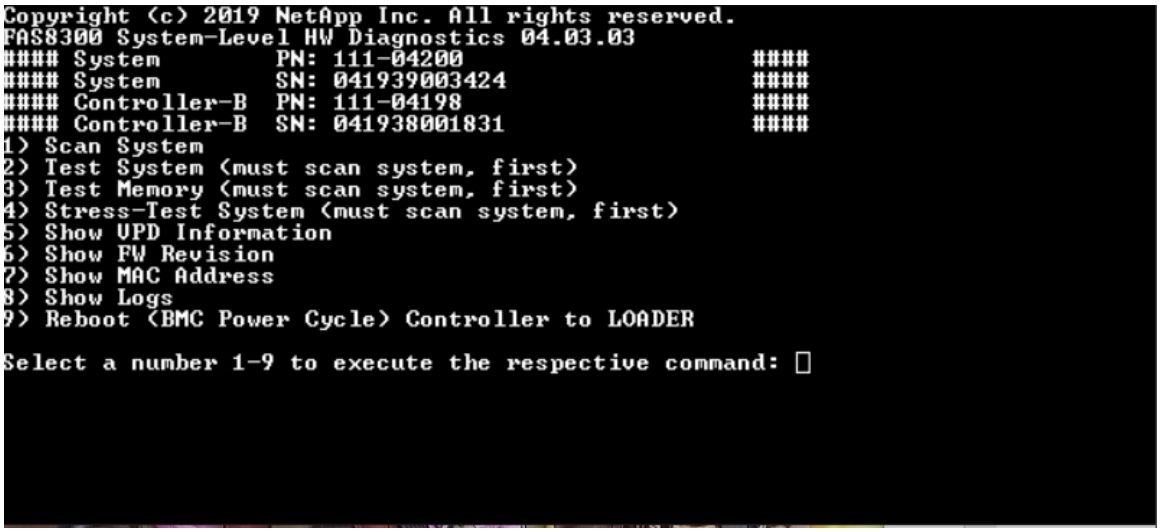

Show Logs Selection

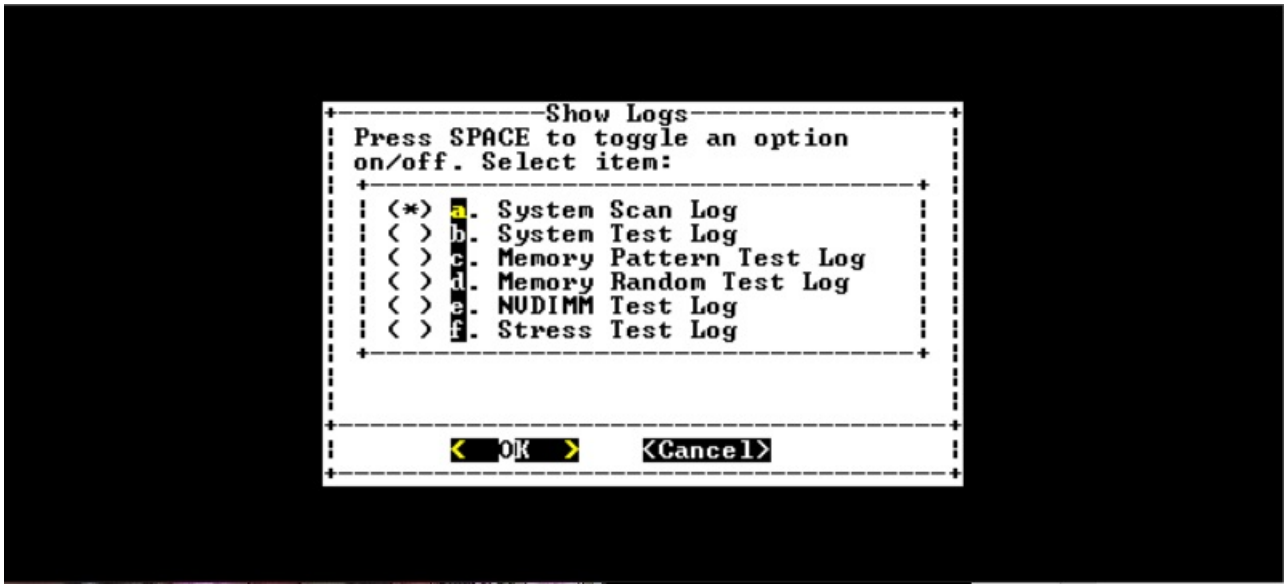

- Use the "up" and "down" arrow keys to select the log types to display.
- Use the "space" bar to toggle an option on or off.
- Use the left and right arrow keys to select "Show" or "Cancel".
- Press "Enter" to execute your choice.

The "Select Logs" page is displayed:

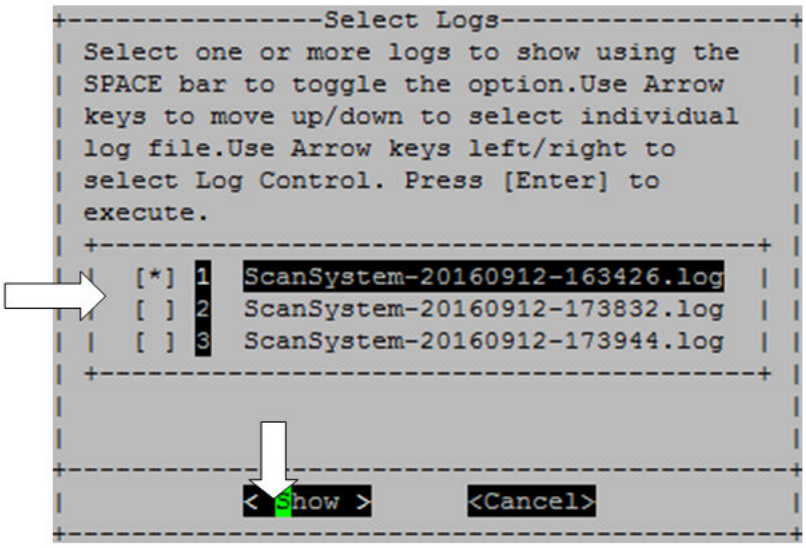

The system saves the latest ten logs and conveniently includes the timestamp in the log name.

- Use the "up" and "down" arrow keys to select the logs to display.
- Use the "space" bar to toggle an option on or off.
- Use the left and right arrow keys to select "Show" or "Cancel".
- Press "Enter" to execute your choice.

The logs are displayed, shown as below.

```
=======================================================
CPU:
Processor    T/C  Vendor        Model  Family Core  Frequency  Stepping  Cache
   Temperature
Processor0   1    GenuineIntel  79     6      18    2.30GHz    1         46080 K
B  39
Processor1   1    GenuineIntel  79     6      18    2.30GHz    1         46080 K
B  39
=======================================================
Memory:
DIMM    Size    Speed     Rank  Manufacturer  PN                   SN
dimm1   32 GB   2133 MHz  2     Samsung       SHB724G4LML23P2-SB   3213D720
dimm2   32 GB   2133 MHz  2     Samsung       SHB724G4LML23P2-SB   3213C819
dimm3   32 GB   2133 MHz  2     Samsung       SHB724G4LML23P2-SB   3213D19E
dimm4   32 GB   2133 MHz  2     Samsung       SHB724G4LML23P2-SB   3213D47D
dimm5   32 GB   2133 MHz  2     Samsung       SHB724G4LML23P2-SB   3213D13C
dimm6   32 GB   2133 MHz  2     Samsung       SHB724G4LML23P2-SB   3213CAC5
dimm7   32 GB   2133 MHz  2     Samsung       SHB724G4LML23P2-SB   3213D19F
dimm8   32 GB   2133 MHz  2     Samsung       SHB724G4LML23P2-SB   3213CB3F
dimm9   32 GB   2133 MHz  2     Samsung       SHB724G4LML23P2-SB   3213CB1A
dimm10  32 GB   2133 MHz  2     Samsung       SHB724G4LML23P2-SB   3213CD73
dimm11  32 GB   2133 MHz  2     Samsung       SHB724G4LML23P2-SB   3213C84B
dimm12  32 GB   2133 MHz  2     Samsung       SHB724G4LML23P2-SB   32149EEA
/boot/EFI/lemur/ScanSystem-20160923-094234.log
```

Use the following keys to control the displayed log output:

- PgUp/PgDn – Scroll up or down page by page
- Up/Down Arrow keys – Scroll up or down line by line

- Home – Return to the beginning of the page
- End – Go to the end of the page
- / (slash) – Keyword search (enter text and press "Enter")
- Q – Return to the main menu

Reboot (BMC power cycle) controller to LOADER

To exit system-level diagnostics and return to the LOADER prompt, type "8" and then press "Enter".

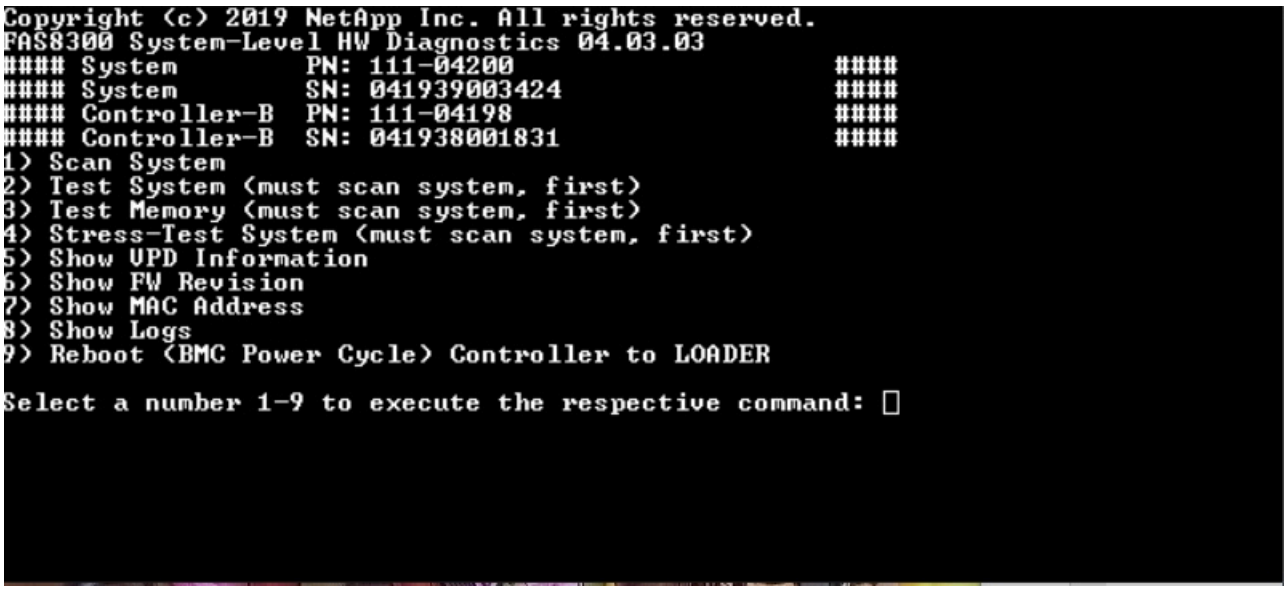

Appendix A. Getting help and technical assistance

If you need help, service, or technical assistance or just want more information about Lenovo products, you will find a wide variety of sources available from Lenovo to assist you.

On the World Wide Web, up-to-date information about Lenovo systems, optional devices, services, and support are available at:

http://datacentersupport.lenovo.com

Note: This section includes references to IBM Web sites and information about obtaining service. IBM is Lenovo's preferred service provider for ThinkSystem.

Before you call

Before you call, there are several steps that you can take to try and solve the problem yourself. If you decide that you do need to call for assistance, gather the information that will be needed by the service technician to more quickly resolve your problem.

Attempt to resolve the problem yourself

You can solve many problems without outside assistance by following the troubleshooting procedures that Lenovo provides in the online help or in the Lenovo product documentation. The Lenovo product documentation also describes the diagnostic tests that you can perform. The documentation for most systems, operating systems, and programs contains troubleshooting procedures and explanations of error messages and error codes. If you suspect a software problem, see the documentation for the operating system or program.

You can find the product documentation for your ThinkSystem products at the following location:

http://thinksystem.lenovofiles.com/help/index.jsp

You can take these steps to try to solve the problem yourself:

- Check all cables to make sure that they are connected.
- Check the power switches to make sure that the system and any optional devices are turned on.
- Check for updated software, firmware, and operating-system device drivers for your Lenovo product. The Lenovo Warranty terms and conditions state that you, the owner of the Lenovo product, are responsible for maintaining and updating all software and firmware for the product (unless it is covered by an additional maintenance contract). Your service technician will request that you upgrade your software and firmware if the problem has a documented solution within a software upgrade.
- If you have installed new hardware or software in your environment, check https://serverproven.lenovo.com and https://datacentersupport.lenovo.com/us/en/lsic to make sure that the hardware and software are supported by your product.
- Go to http://datacentersupport.lenovo.com and check for information to help you solve the problem.
  - Check the Lenovo forums at https://forums.lenovo.com/t5/Datacenter-Systems/ct-p/sv_eg to see if someone else has encountered a similar problem.

You can solve many problems without outside assistance by following the troubleshooting procedures that Lenovo provides in the online help or in the Lenovo product documentation. The Lenovo product documentation also describes the diagnostic tests that you can perform. The documentation for most systems, operating systems, and programs contains troubleshooting procedures and explanations of error

© Copyright Lenovo 2023

messages and error codes. If you suspect a software problem, see the documentation for the operating system or program.

Gathering information needed to call Support

If you believe that you require warranty service for your Lenovo product, the service technicians will be able to assist you more efficiently if you prepare before you call. You can also see http://datacentersupport.lenovo.com/warrantylookup for more information about your product warranty.

Gather the following information to provide to the service technician. This data will help the service technician quickly provide a solution to your problem and ensure that you receive the level of service for which you might have contracted.

- Hardware and Software Maintenance agreement contract numbers, if applicable
- Machine type number (Lenovo 4-digit machine identifier)
- Model number
- Serial number
- Current system UEFI and firmware levels
- Other pertinent information such as error messages and logs

As an alternative to calling Lenovo Support, you can go to the Service requests and PMRs website to submit an Electronic Service Request. Submitting an Electronic Service Request will start the process of determining a solution to your problem by making the pertinent information available to the service technicians. The Lenovo service technicians can start working on your solution as soon as you have completed and submitted an Electronic Service Request.

Collecting service data

To clearly identify the root cause of a system issue or at the request of Lenovo Support, you might need collect service data that can be used for further analysis. Service data includes information such as event logs and hardware inventory. Service data is collected automatically in the background. If the AutoSupport function is enabled on ONTAP, service data is automatically transmitted. To enable the AutoSupport function, do the following:

Step 1. Input the user name and password to enter the ONTAP main interface.

Step 2. Click **Cluster → Settings** from the left navigation pane.

Step 3. In the **AutoSupport** card, click the more icon .

Step 4. Select **Enable**.

Step 5. To configure how the AutoSupport data is sent, select **More options**.

Note: The available transport protocols are HTTP, HTTPS, and SMTP.

Step 6. If necessary, configure the proxy.

Step 7. Configure the mail-host and e-mail recipient that will receive the data.

Contacting Support

You can contact Support to obtain help for your issue.

You can receive hardware service through a Lenovo Authorized Service Provider. To locate a service provider authorized by Lenovo to provide warranty service, go to https://datacentersupport.lenovo.com/

serviceprovider and use filter searching for different countries. For Lenovo support telephone numbers, see https://datacentersupport.lenovo.com/supportphonelist for your region support details.

Appendix B. Notice of Privacy Practices

Lenovo recognizes that privacy is of great importance to individuals everywhere – our customers, website visitors, product users...everyone. This is why the responsible use and protection of personal and other information under our care is a core Lenovo value.

Our full privacy statement is available at the link below. If you have any further questions or concerns, please feel free to reach us at privacy@lenovo.com.

https://www.lenovo.com/us/en/privacy/

To view this privacy statement in other languages, visit the sites below:

- Chinese: https://www.lenovo.com.cn/public/privacy.html
- English (UK): https://www3.lenovo.com/gb/en/privacy/
- English (Canada): https://www3.lenovo.com/ca/en/privacy/
- French (Canada): https://canada.lenovo.com/fr/ca/en/privacy/
- German: https://www.lenovo.com/de/de/privacy/
- French: https://www.lenovo.com/fr/fr/privacy/
- Swedish: https://www.lenovo.com/se/sv/privacy/
- Danish: https://www.lenovo.com/dk/da/privacy/
- Spanish: https://www.lenovo.com/es/es/privacy/
- Japanese: http://www.lenovo.com/privacy/jp/ja/
- Brazilian Portuguese: https://www.lenovo.com/br/pt/privacy/
- Italian: https://www.lenovo.com/it/it/privacy/
- Hungarian: https://www.lenovo.com/hu/hu/privacy/
- Russian: https://www.lenovo.com/ru/ru/privacy/
- Korean: https://www.lenovo.com/kr/ko/privacy/
- Polish: https://www.lenovo.com/pl/pl/privacy/

Our service provider NetApp will also collect certain information when you use this device. More information about NetApp’s privacy practices is available at the link below:

https://www.netapp.com/us/legal/privacypolicy/index.aspx.

To view NetApp’s privacy policy in other languages, visit the sites below:

- German: https://www.netapp.com/de/legal/privacypolicy/index.aspx
- Japanese: https://www.netapp.com/jp/legal/privacypolicy/index.aspx
- French: https://www.netapp.com/fr/legal/privacypolicy/index.aspx
- Spanish: https://www.netapp.com/es/legal/privacypolicy/index.aspx

© Copyright Lenovo 2023

Appendix C. Notices

Lenovo may not offer the products, services, or features discussed in this document in all countries. Consult your local Lenovo representative for information on the products and services currently available in your area.

Any reference to a Lenovo product, program, or service is not intended to state or imply that only that Lenovo product, program, or service may be used. Any functionally equivalent product, program, or service that does not infringe any Lenovo intellectual property right may be used instead. However, it is the user's responsibility to evaluate and verify the operation of any other product, program, or service.

Lenovo may have patents or pending patent applications covering subject matter described in this document. The furnishing of this document is not an offer and does not provide a license under any patents or patent applications. You can send inquiries in writing to the following:

Lenovo (United States), Inc.
8001 Development Drive
Morrisville, NC 27560
U.S.A.
Attention: Lenovo Director of Licensing

LENOVO PROVIDES THIS PUBLICATION “AS IS” WITHOUT WARRANTY OF ANY KIND, EITHER EXPRESS OR IMPLIED, INCLUDING, BUT NOT LIMITED TO, THE IMPLIED WARRANTIES OF NON-INFRINGEMENT, MERCHANTABILITY OR FITNESS FOR A PARTICULAR PURPOSE. Some jurisdictions do not allow disclaimer of express or implied warranties in certain transactions, therefore, this statement may not apply to you.

This information could include technical inaccuracies or typographical errors. Changes are periodically made to the information herein; these changes will be incorporated in new editions of the publication. Lenovo may make improvements and/or changes in the product(s) and/or the program(s) described in this publication at any time without notice.

The products described in this document are not intended for use in implantation or other life support applications where malfunction may result in injury or death to persons. The information contained in this document does not affect or change Lenovo product specifications or warranties. Nothing in this document shall operate as an express or implied license or indemnity under the intellectual property rights of Lenovo or third parties. All information contained in this document was obtained in specific environments and is presented as an illustration. The result obtained in other operating environments may vary.

Lenovo may use or distribute any of the information you supply in any way it believes appropriate without incurring any obligation to you.

Any references in this publication to non-Lenovo Web sites are provided for convenience only and do not in any manner serve as an endorsement of those Web sites. The materials at those Web sites are not part of the materials for this Lenovo product, and use of those Web sites is at your own risk.

Any performance data contained herein was determined in a controlled environment. Therefore, the result obtained in other operating environments may vary significantly. Some measurements may have been made on development-level systems and there is no guarantee that these measurements will be the same on generally available systems. Furthermore, some measurements may have been estimated through extrapolation. Actual results may vary. Users of this document should verify the applicable data for their specific environment.

© Copyright Lenovo 2023

Trademarks

LENOVO, LENOVO logo, and THINKSYSTEM are trademarks of Lenovo. All other trademarks are the property of their respective owners. © 2023 Lenovo.

Important notes

Processor speed indicates the internal clock speed of the microprocessor; other factors also affect application performance.

CD or DVD drive speed is the variable read rate. Actual speeds vary and are often less than the possible maximum.

When referring to processor storage, real and virtual storage, or channel volume, KB stands for 1 024 bytes, MB stands for 1 048 576 bytes, and GB stands for 1 073 741 824 bytes.

When referring to hard disk drive capacity or communications volume, MB stands for 1 000 000 bytes, and GB stands for 1 000 000 000 bytes. Total user-accessible capacity can vary depending on operating environments.

Maximum internal hard disk drive capacities assume the replacement of any standard hard disk drives and population of all hard-disk-drive bays with the largest currently supported drives that are available from Lenovo.

Maximum memory might require replacement of the standard memory with an optional memory module.

Each solid-state memory cell has an intrinsic, finite number of write cycles that the cell can incur. Therefore, a solid-state device has a maximum number of write cycles that it can be subjected to, expressed as `total bytes written` (TBW). A device that has exceeded this limit might fail to respond to system-generated commands or might be incapable of being written to. Lenovo is not responsible for replacement of a device that has exceeded its maximum guaranteed number of program/erase cycles, as documented in the Official Published Specifications for the device.

Lenovo makes no representations or warranties with respect to non-Lenovo products. Support (if any) for the non-Lenovo products is provided by the third party, not Lenovo.

Some software might differ from its retail version (if available) and might not include user manuals or all program functionality.

Particulate contamination

Attention: Airborne particulates (including metal flakes or particles) and reactive gases acting alone or in combination with other environmental factors such as humidity or temperature might pose a risk to the device that is described in this document.

Risks that are posed by the presence of excessive particulate levels or concentrations of harmful gases include damage that might cause the device to malfunction or cease functioning altogether. This specification sets forth limits for particulates and gases that are intended to avoid such damage. The limits must not be viewed or used as definitive limits, because numerous other factors, such as temperature or moisture content of the air, can influence the impact of particulates or environmental corrosives and gaseous contaminant transfer. In the absence of specific limits that are set forth in this document, you must implement practices that maintain particulate and gas levels that are consistent with the protection of human health and safety. If Lenovo determines that the levels of particulates or gases in your environment have caused damage to the device, Lenovo may condition provision of repair or replacement of devices or parts

on implementation of appropriate remedial measures to mitigate such environmental contamination. Implementation of such remedial measures is a customer responsibility.

Table 3. Limits for particulates and gases

Limits for particulates and gases

Contaminant	Limits
Particulate	• The room air must be continuously filtered with 40% atmospheric dust spot efficiency (MERV 9) according to ASHRAE Standard 52.2[1]. • Air that enters a data center must be filtered to 99.97% efficiency or greater, using high-efficiency particulate air (HEPA) filters that meet MIL-STD-282. • The deliquescent relative humidity of the particulate contamination must be more than 60%[2]. • The room must be free of conductive contamination such as zinc whiskers.
Gaseous	• Copper: Class G1 as per ANSI/ISA 71.04-1985[3] • Silver: Corrosion rate of less than 300 Å in 30 days

[1] ASHRAE 52.2-2008 - *Method of Testing General Ventilation Air-Cleaning Devices for Removal Efficiency by Particle Size*. Atlanta: American Society of Heating, Refrigerating and Air-Conditioning Engineers, Inc.

[2] The deliquescent relative humidity of particulate contamination is the relative humidity at which the dust absorbs enough water to become wet and promote ionic conduction.

[3] ANSI/ISA-71.04-1985. *Environmental conditions for process measurement and control systems: Airborne contaminants*. Instrument Society of America, Research Triangle Park, North Carolina, U.S.A.

ASHRAE class compliance information

Your system complies with ASHRAE class A2 specifications. System performance may be impacted when operating temperature is outside ASHRAE A2 specification.

- Air temperature:
  - Operating:
    - ASHRAE class A2: 10–35°C (50–95°F); when the altitude exceeds 900 m (2953 ft), the maximum ambient temperature value decreases by 1°C (1.8°F) with every 300 m (984 ft) of altitude increase.
    - ASHRAE class A3: 5–40°C (41–104°F); when the altitude exceeds 900 m (2953 ft), the maximum ambient temperature value decreases by 1°C (1.8°F) with every 175 m (574 ft) of altitude increase.
    - ASHRAE class A4: 5–45°C (41–113°F); when the altitude exceeds 900 m (2953 ft), the maximum ambient temperature value decreases by 1°C (1.8°F) with every 125 m (410 ft) of altitude increase.
  - System off: 5–45°C (41–113°F)
  - Shipping or storage: -40–60°C (-40–140°F)
- Maximum altitude: 3050 m (10 000 ft)
- Relative humidity (non-condensing):
  - Operating:
    - ASHRAE class A2: 8%–80%; maximum dew point: 21°C (70°F)
    - ASHRAE class A3: 8%–85%; maximum dew point: 24°C (75°F)
    - ASHRAE class A4: 8%–90%; maximum dew point: 24°C (75°F)
  - Shipping or storage: 8%–90%

Depending on the hardware configuration, some system models comply with ASHRAE class A3 and class A4 specifications.

Telecommunication regulatory statement

This product may not be certified in your country for connection by any means whatsoever to interfaces of public telecommunications networks. Further certification may be required by law prior to making any such connection. Contact a Lenovo representative or reseller for any questions.

Electronic emission notices

When you attach a monitor to the equipment, you must use the designated monitor cable and any interference suppression devices that are supplied with the monitor.

Additional electronic emissions notices are available at:

http://thinksystem.lenovofiles.com/help/index.jsp

Taiwan region BSMI RoHS declaration

單元 Unit	限用物質及其化學符號 Restricted substances and its chemical symbols					
	鉛Lead (PB)	汞Mercury (Hg)	鎘Cadmium (Cd)	六價鉻 Hexavalent chromium (Cr^{+6})	多溴聯苯 Polybrominated biphenyls (PBB)	多溴二苯醚 Polybrominated diphenyl ethers (PBDE)
機架	○	○	○	○	○	○
外部蓋板	○	○	○	○	○	○
機械組合件	–	○	○	○	○	○
空氣傳動設備	–	○	○	○	○	○
冷卻組合件	–	○	○	○	○	○
內存模組	–	○	○	○	○	○
處理器模組	–	○	○	○	○	○
電纜組合件	–	○	○	○	○	○
電源供應器	–	○	○	○	○	○
儲備設備	–	○	○	○	○	○
電路卡	–	○	○	○	○	○
光碟機	–	○	○	○	○	○
雷射器	–	○	○	○	○	○

備考1. 〝超出0.1 wt %〞及〝超出0.01 wt %〞係指限用物質之百分比含量超出百分比含量基準值。

Note1 : "exceeding 0.1wt%" and "exceeding 0.01 wt%" indicate that the percentage content of the restricted substance exceeds the reference percentage value of presence condition.

備考2. 〝○〞係指該項限用物質之百分比含量未超出百分比含量基準值。

Note2 : "○" indicates that the percentage content of the restricted substance does not exceed the percentage of reference value of presence.

備考3. 〝-〞係指該項限用物質為排除項目。

Note3 : The "-" indicates that the restricted substance corresponds to the exemption.

0220

Taiwan Region import and export contact information

Contacts are available for Taiwan Region import and export information.

委製商/進口商名稱: 台灣聯想環球科技股份有限公司
進口商地址: 台北市南港區三重路 66 號 8 樓
進口商電話: 0800-000-702

Index

A

AFA DG5000 systems
  installing the hardware 12
  preparing for installation 11
ASHRAE class compliance information 108

B

battery, NVMEM
  considerations for replacing in a controller 71
  prerequisites for replacing 71
battery, RTC
  considerations for replacing in a controller 60
boot media
  copying the image using a USB flash drive 53
  locating and replacing 53
  moving to a replacement controller module 34
  prerequisites and considerations for replacing 47
  replacing 53
boot meia
  locating 53
booting
  installing a controller module in a system 79
  reinstalling a controller module in a system 27, 64, 70

C

chassis
  considerations for replacing 76
  moving drives to a new 78
  replacing from within the equipment rack or system cabinet 79
cluster interconnect
  cabling 13, 15
collecting service data 100
components
  considerations for replacing the chassis 76
  replacing a chassis from within the equipment rack or system cabinet 79
considerations
  for replacing the boot media 47
contamination, particulate and gaseous 106
controller module
  installing in a system and booting when replacing the chassis 79
  reinstalling in a system and booting 27, 64, 70
controller modules
  cabling to data network switches 13, 15, 17–18
  cabling to FC switches 13, 15, 17–18
  cabling to management network switched 17–18
  cabling to management network switches 13, 15
  completing the replacement process 24, 29, 40, 47, 59, 66, 71, 76, 80
  considerations for replacing DIMMs in 40
  considerations for replacing NVMEM battery in 71
  considerations for replacing RTC battery in 60
  installing when replacing a controller module 37
  installing when replacing a FRU 44, 74
  moving fans when replacing e controller module 33
  prerequisites for replacing 29
  replacing fans 26
  shutting down 25, 30, 41, 60, 66, 71, 77
  tasks for replacing 30
controllers
  introduction to shutting down when replacing the chassis 76
copying an image to the boot media
  using a USB flash drive 53
creating a personalized support web page 99
custom support web page 99

D

diagnostics
  running 40, 47, 80
diagnostict
  running 76
DIMMs 43
  considerations for replacing 40
  considerations for replacing in a controller 40
  DIMMs
    error correction codes (ECC), considerations for 40
  installing 34, 43
  locating 34, 43
  moving 34
  removing 34, 43
  replacing 43
drives
  moving to a new chassis 78

E

equipment racks
  replacing a chassis from within 79
error correction codes (ECC)
  DIMMs, considerations for 40

F

fan 25
  prerequisites for replacing 23
Fibre Channel host network
  cabling 17
FRU replacements
  running common diagnostics 40, 47, 80

G

gaseous contamination 106
Getting help 99

H

hardware
  installing AFA DG5000 system 12
  tasks for replacing controller module 30
hardware service and support telephone numbers 100
help 99
hot-swapping
  power supply 23

I

impaired controllers

© Copyright Lenovo 2023

introduction to shutting down 30, 41, 50, 60, 66, 71
impaired nodes
shutting down 25, 30, 41, 60, 66, 71, 77
important notices 106
installation
preparing for AFA DG5000 system 11
installing
controller module in a system and booting when replacing the chassis 79
controller modules when replacing a controller module 37
controller modules when replacing a FRU 44, 74
the NVRAM batteries 73
installing and setting up
guided process 11
PDF poster 11
introduction 1
iSCSI host network
cabling 18

L

locating
boot media 53
locating and replacing
a boot media 53

M

management software 4
mezzanine cards
installing 69
removing 69
replacing 69
modules, controller
considerations for replacing DIMMs in 40
considerations for replacing NVMEM battery in 71
considerations for replacing RTC battery in 60
shutting down 77
moving fans
when replacing the controller module 33
moving NVRAM batteries
when replacing controller modules 36
moving power supplies
when replacing controller modules 32
moving the boot media
when replacing a controller module 34

N

nodes
considerations for replacing DIMMs in controller modules 40
considerations for replacing NVMEM battery in controller modules 71
considerations for replacing RTC battery in controller modules 60
shutting down 25, 30, 41, 60, 66, 71, 77
non-disruptive replacements
power supply 23
notes, important 106
notices 105
NVDIMM battery replacements
running common diagnostics 76
NVMEM battery
considerations for replacing in a controller 71
prerequisites for replacing 71
NVRAM batteries
installing 73
moving when replacing controller modules 36
removing 73
replacing 73

P

particulate contamination 106
PCIe cards
installing 35
removing 35
replacing 35
power supply
hot swapping 23
prerequisites
for replacing the boot media 47
procedures, shutdown
node 77

R

real-time clock battery
considerations for replacing in a controller 60
Rear view of the system 6
reinstalling
controller module in a system and booting 27, 64, 70
removing
the controller module from the chassis 25, 30, 41, 51, 60, 67, 72
the controller module from the chassis when replacing the chassis 77
the NVRAM batteries 73
removing from the chassis
a controller module 25, 30, 41, 51, 60, 67, 72
a controller module when replacing the chassis 77
replacement procedures
prerequisites for controller modules 29
prerequisites for power supply 23
replacing
DIMMs in a controller, considerations for 40
DIMMs, considerations for 40
NVMEM battery in a controller, considerations for 71
NVMEM battery, prerequisites for 71
power supply 23
RTC battery in a controller, considerations for 60
the NVRAM batteries 73
replacing a controller module
moving the boot media 34
replacing controller modules
moving NVRAM batteries 36
moving power supplies 32
RTC batteries
installing 63
locating 63
removing 63
replacing 63
RTC battery
considerations for replacing in a controller 60
running
system-level diagnostics 81, 84–87, 90, 92–95, 97
running common diagnostics
on FRU replacements 40, 47, 80
on NVDIMM battery replacements 76
running diagnostics
system-level 81, 84–87, 90, 92–95, 97

S

safety iii
security advisories 4
service and support
before you call 99
hardware 100

software 100
service data 100
shutdown procedures i
nodes 25, 30, 41, 60, 66, 71, 77
single drive shelf
cabling controllers 19
software 5
software service and support telephone numbers 100
storage
cabling controllers to two drive shelves 19
storage systems
shutting down a node in 25, 30, 41, 60, 66, 71, 77
support web page, custom 99
swapping out
power supply 23
system cabinets
replacing a chassis from within 79
system configuration
completing 20
system setup
completing 20
system-level diagnostics 81, 84–87, 90, 92–95, 97
systems
considerations for replacing DIMMs in controller modules 40
considerations for replacing NVMEM battery in controller modules 71
considerations for replacing RTC battery in controller modules 60
shutting down a node in 77

T

Taiwan region BSMI RoHS declaration 109
Taiwan Region import and export contact information 109
Tech Tips 4
telecommunication regulatory statement 108
telephone numbers 100
trademarks 106
troubleshooting
running system-level diagnostics 81, 84–87, 90, 92–95, 97

U

USB flash drive
copying an image to the boot media 53

© Copyright Lenovo 2023