Lenovo

ThinkSystem Micro DataCenter 12U Rack Cabinet
User Guide

Machine Type: 7D2B and 7D2N

Second Edition (September 2024)

© Copyright Lenovo 2020, 2024.
LIMITED AND RESTRICTED RIGHTS NOTICE: If data or software is delivered pursuant to a General Services Administration (GSA) contract, use, reproduction, or disclosure is subject to restrictions set forth in Contract No. GS-35F-05925.

Contents

Contents i

Safety iii

Safety statement iv

Chapter 1. Introduction 1

Chapter 2. Specifications 3

Supported servers 3

Chapter 3. Parts Listing 5

Chapter 4. Move the rack cabinet 7

Casters 8

Crane lifter 10

Chapter 5. Managing cables 15

Chapter 6. Hardware removal, installation and conversion 17

Removing and installing the side panels 17

Remove the side panels 17

Install the side panels 17

Removing, installing and reversing the doors . . . 18

Remove the door 18

Install the door 21

Reverse the door 24

Door position monitor device replacement 31

Remove the door position monitor device . . . 32

Install the door position monitor device 33

Appendix A. Getting help and technical assistance 35

Before you call 35

Contacting Support 36

Appendix B. Notices 37

Trademarks 38

Index 39

© Copyright Lenovo 2020, 2024

Safety

Before installing this product, read the Safety Information.

قبل تركيب هذا المنتج، يجب قراءة الملاحظات الآمنية

Antes de instalar este produto, leia as Informações de Segurança.

在安装本产品之前，请仔细阅读 Safety Information
(安全信息)。

安裝本產品之前，請先閱讀「安全資訊」。

Prije instalacije ovog produkta obavezno pročitajte Sigurnosne Upute.

Před instalací tohoto produktu si přečtěte příručku bezpečnostních instrukcí.

Læs sikkerhedsforskrifterne, før du installerer dette produkt.

Lees voordat u dit product installeert eerst de veiligheidsvoorschriften.

Ennen kuin asennat tämän tuotteen, lue turvaohjeet kohdasta Safety Information.

Avant d'installer ce produit, lisez les consignes de sécurité.

Vor der Installation dieses Produkts die Sicherheitshinweise lesen.

Πριν εγκαταστήσετε το προϊόν αυτό, διαβάστε τις πληροφορίες ασφάλειας
(safety information).

.לפני שתתקינו מוצר זה, קראו את הוראות הבטיחות

A termék telepítése előtt olvassa el a Biztonsági előírásokat!

Prima di installare questo prodotto, leggere le Informazioni sulla Sicurezza.

製品の設置の前に、安全情報をお読みください。

본 제품을 설치하기 전에 안전 정보를 읽으십시오.

Пред да се инсталира овој продукт, прочитајте информацијата за безбедност.

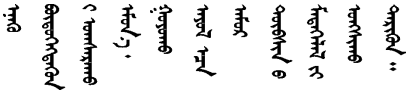

Les sikkerhetsinformasjonen (Safety Information) før du installerer dette produktet.

Przed zainstalowaniem tego produktu, należy zapoznać się
z książką "Informacje dotyczące bezpieczeństwa" (Safety Information).

Antes de instalar este produto, leia as Informações sobre Segurança.

© Copyright Lenovo 2020, 2024

Перед установкой продукта прочтите инструкции по
технике безопасности.

Pred inštaláciou tohto zariadenia si pečítaje Bezpečnostné predpisy.

Pred namestitvijo tega proizvoda preberite Varnostne informacije.

Antes de instalar este producto, lea la información de seguridad.

Läs säkerhetsinformationen innan du installerar den här produkten.

ཐོན་རྫས་འདི་བདེ་སྤྱོད་མ་བྱས་གོང་། ་སྐོར་གྱི་ཡིད་གཟབ་
བྱ་འདྲ་མིན་ཡོད་པའི་འོད་སྡེར་བལྟ་དགོས།

Bu ürünü kurmadan önce güvenlik bilgilerini okuyun.

مەزكۇر مەھسۇلاتنى ئورنىتىشتىن بۇرۇن بىخەتەرلىك ئۇچۇرلىرىنى ئوقۇپ چىقىڭ.

Youq mwngz yungh canjbinj neix gaxgonq, itdingh aeu doeg aen
canjbinj soengq cungj vahgangj ancien siusik.

Safety statement

Read this section carefully before operating any task on the cabinet.

R001

CAUTION:
To ensure safety, all configurations of the rack cabinet must be certified by a nationally recognized testing laboratory to verify compliance with country-specific safety regulations. This process ensures that the end product remains safe for the operator and service personnel under normal and foreseeable misuse conditions.

R002

DANGER

- **Always lower the leveling pads on the rack cabinet.**
- **Always install stabilizer brackets on the rack cabinet.**
- **Always install the heaviest devices in the bottom of the rack cabinet.**
- **Always install servers and optional devices starting from the bottom of the rack cabinet.**

R003

DANGER

- **Do not extend more than one sliding device at a time.**
- **The maximum allowable weight for a device on slide rails is 80 kg (176 lb). Do not install a sliding device that exceeds this weight.**

S029

DANGER

Electrical current from power, telephone, and communication cables is hazardous.
To avoid a shock hazard:

- **Do not connect or disconnect any cables or perform installation, maintenance, or reconfiguration of this product during an electrical storm.**
- **Connect all power cords to a properly wired and grounded power source.**
- **Connect to properly wired power sources any equipment that will be attached to this product.**
- **When possible, use one hand only to connect or disconnect signal cables.**
- **Never turn on any equipment when there is evidence of fire, water, or structural damage.**
- **Disconnect the attached ac power cords, dc power sources, network connections, telecommunications systems, and serial cables before you open the device covers, unless you are instructed otherwise in the installation and configuration procedures.**
- **Connect and disconnect cables as described in the following table when installing, moving, or opening covers on this product or attached devices.**

To Connect:

1. Turn OFF all power sources and equipment that is to be attached to this product.
2. Attach signal cables to the product.
3. Attach power cords to the product.
   - For ac systems, use appliance inlets.
   - For dc systems, ensure correct polarity of -48 V dc connections: RTN is + and -48 V dc is -. Earth ground should use a two-hole lug for safety.
4. Attach signal cables to other devices.
5. Connect power cords to their sources.
6. Turn ON all the power sources.

To Disconnect:

1. Turn OFF all power sources and equipment that is to be attached to this product.
   - For ac systems, remove all power cords from the chassis power receptacles or interrupt power at the ac power distribution unit.
   - For dc systems, disconnect dc power sources at the breaker panel or by turning off the power source. Then, remove the dc cables.
2. Remove the signal cables from the connectors.
3. Remove all cables from the devices.

© Copyright Lenovo 2020, 2024

S036

18 - 32 kg (39 - 70 lb)

32 - 55 kg (70 - 121 lb)

> 55 kg (121 lb)

CAUTION:
Use safe practices when lifting.

R006

CAUTION:
Do not place any object on top of a rack-mounted device unless that rack-mounted device is intended for use as a shelf.

R007

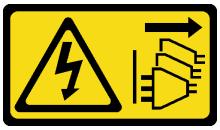

DANGER

- **Connect power cords from devices in the rack cabinet to electrical outlets that are near the rack cabinet and are easily accessible.**
- **Each rack cabinet might have more than one power cord. Be sure to disconnect all power cords in the rack cabinet before you service any device in the rack cabinet.**
- **Install an emergency-power-off switch if more than one power device (power distribution unit or uninterruptible power supply) is installed in the same rack cabinet.**
- **Connect all devices that are installed in a rack cabinet to power devices that are installed in the same rack cabinet. Do not connect a power cord from a device that is installed in one rack cabinet to a power device that is installed in a different rack cabinet.**

R009

CAUTION:

Removing components from the upper positions in the Enterprise Rack cabinet improves rack stability during relocation. Follow these general guidelines whenever you relocate a populated rack cabinet within a room or building:

- **Reduce the weight of the rack cabinet by removing equipment starting at the top of the rack cabinet. When possible, restore the rack cabinet to the configuration of the rack cabinet as you received it. If this configuration is not known, you must do the following:**
  - **Remove all devices in the 32 U position and above.**
  - **Make sure that the heaviest devices are installed in the bottom of the rack cabinet.**
  - **Make sure that there are no empty U positions between devices installed in the rack cabinet below the 32 U position.**
- **If the rack cabinet that you are relocating is part of a suite of rack cabinets, detach the rack cabinet from the suite.**
- **Inspect the route that you plan to take, to eliminate potential hazards.**
- **Make sure that the route that you choose can support the weight of the loaded rack cabinet. See the documentation that comes with your rack cabinet for the weight of a loaded rack cabinet.**
- **Make sure that all door openings are at least 760 x 2030 mm (30 x 80 in.)**
- **Make sure that all devices, shelves, drawers, doors, and cables are secure.**
- **Make sure that the four leveling pads are raised to their highest positions.**
- **Make sure that no stabilizer bracket is installed on the rack cabinet.**
- **Do not use a ramp that is inclined more than 10 degrees.**
- **When the rack cabinet is in the new location, do the following:**
  - **Lower the four leveling pads.**
  - **Install stabilizer brackets on the rack cabinet.**
  - **If you removed any devices from the rack cabinet, repopulate the rack cabinet from the lowest position to the highest position.**

If a long-distance relocation is required, restore the rack cabinet to the configuration of the rack cabinet as you received it. Pack the rack cabinet in the original packaging material, or equivalent. Also, lower the leveling pads to raise the casters off the pallet and bolt the rack cabinet to the pallet.

© Copyright Lenovo 2020, 2024

Chapter 1. Introduction

See this documentation to learn about specification details and installation instructions of ThinkSystem Micro DataCenter 12U Rack Cabinet.

ThinkSystem Micro DataCenter 12U Rack Cabinet is a 12U cabinet designed for Micro DataCenter servers.

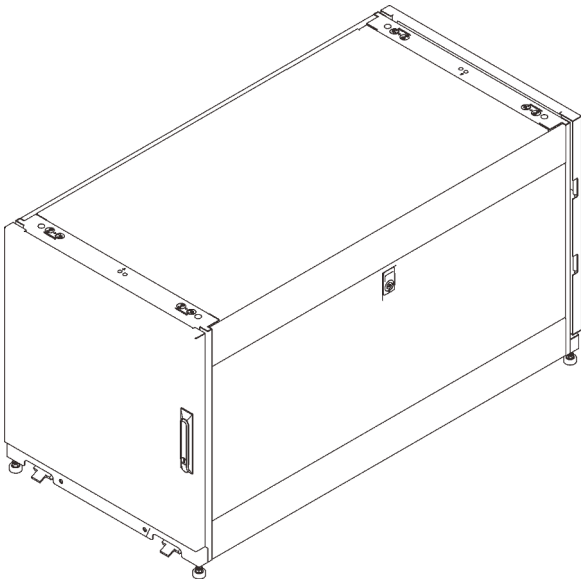

Figure 1. ThinkSystem Micro DataCenter 12U Rack Cabinet

The cabinet comes with a limited warranty. For details about the warranty, see:
https://support.lenovo.com/us/en/solutions/ht503310

For details about your specific warranty, see:
http://datacentersupport.lenovo.com/warrantylookup

© Copyright Lenovo 2020, 2024

Chapter 2. Specifications

See this section for information about ThinkSystem Micro DataCenter 12U Rack Cabinet.

Dimension and weight

Dimension	• Length: 1200 mm (47.2 inch) • Width: 600 mm (23.6 inch) • Height: 660 mm (26.0 inch)
Weight	• With packaging: 113 kg (249.1 lbs) • Without packaging: 61 kg (134.5 lbs)

Supported servers

See this section for information about the servers that are supported by the rack cabinet.

This rack cabinet supports the following servers:

- SR250: https://thinksystem.lenovofiles.com/help/topic/7Y51/pdf_files.html
- SR530: https://thinksystem.lenovofiles.com/help/topic/7X07/pdf_files.html
- SR550: https://thinksystem.lenovofiles.com/help/topic/7X03/pdf_files.html
- SR570: https://thinksystem.lenovofiles.com/help/topic/7Y02/pdf_files.html
- SR590: https://thinksystem.lenovofiles.com/help/topic/7X98/pdf_files.html
- SR630: https://thinksystem.lenovofiles.com/help/topic/7X01/pdf_files.html
- SR650: https://thinksystem.lenovofiles.com/help/topic/7X05/pdf_files.html
- SR670: https://thinksystem.lenovofiles.com/help/topic/7Y37/pdf_files.html
- ST250: https://thinksystem.lenovofiles.com/help/topic/7Y45/pdf_files.html
- ST550: https://thinksystem.lenovofiles.com/help/topic/7X09/pdf_files.html
- SD530: https://thinksystem.lenovofiles.com/help/topic/7X21/pdf_files.html
- SE350: https://thinksystem.lenovofiles.com/help/topic/SE350/pdf_files.html

© Copyright Lenovo 2020, 2024

Chapter 3. Parts Listing

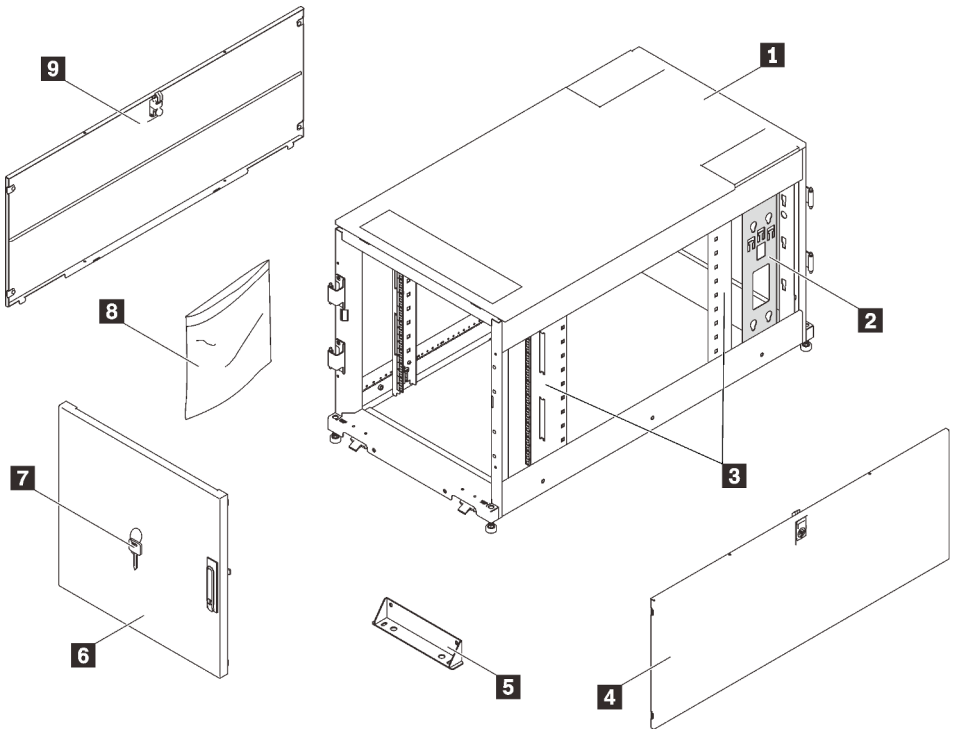

Figure 2. Rack cabinet components

Table 1. Rack cabinet components

1 Rack cabinet frame	6 Removable and reversible door
2 Rear cable flanges	7 Key
3 Vertical mounting flanges	8 Hardware bag (see “Hardware bag” on page 6)
4 Removable side panel	9 Removable side panel
5 Bolt-down bracket	

© Copyright Lenovo 2020, 2024

Hardware bag

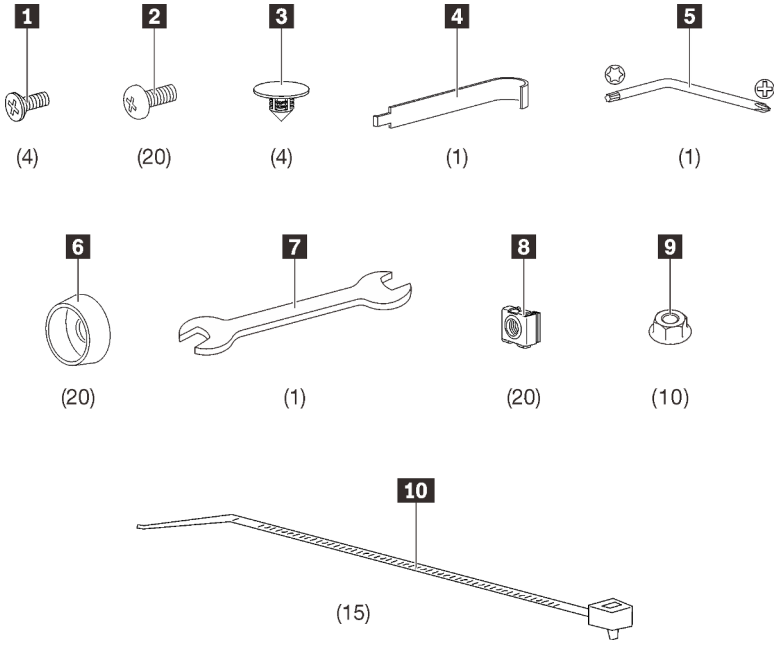

Figure 3. Components in the hardware bag

Table 2. Components in the hardware bag

1 Four M5x12 screws	6 20 plastic cup washers
2 20 M6x16 screws	7 One 13mm/14mm wrench
3 Four hole plugs	8 20 cage nuts
4 One cage nut tool	9 Ten flange nuts
5 One T30/#2 Phillips wrench	10 15 cable straps

Chapter 4. Move the rack cabinet

S037

CAUTION:
The weight of this part or unit is more than 55 kg (121.2 lb). It takes specially trained persons, a lifting device, or both to safely lift this part or unit.

Attention - Tip hazard.

Important:

- The task in this section requires more than two people.
- The cabinet could be easily tipped. Move it with extreme caution.

WARNING: Failure to follow these instructions could result in equipment damage, severe injuries, or death.

Before moving the rack cabinet, complete the following steps:

1. Remove the screws that secure the bolt-down brackets on the front and rear side of the cabinet with the 13-mm socket wrench.

© Copyright Lenovo 2020, 2024

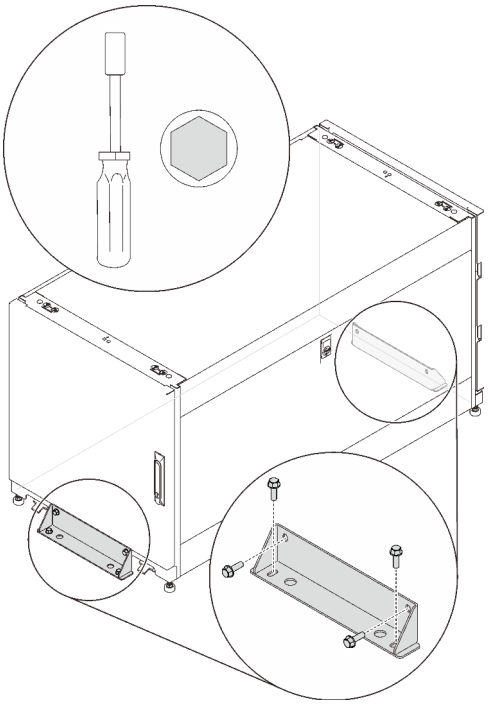

Figure 4. Removing the bolt-down brackets

Two options are available when moving the cabinet:

Casters

S037

CAUTION:
The weight of this part or unit is more than 55 kg (121.2 lb). It takes specially trained persons, a lifting device, or both to safely lift this part or unit.

Complete the following steps to lift and move the cabinet to the designated site:

Step 1. Remove the ramps from the box that is shipped with the cabinet, and install them on the front side of the pallet.

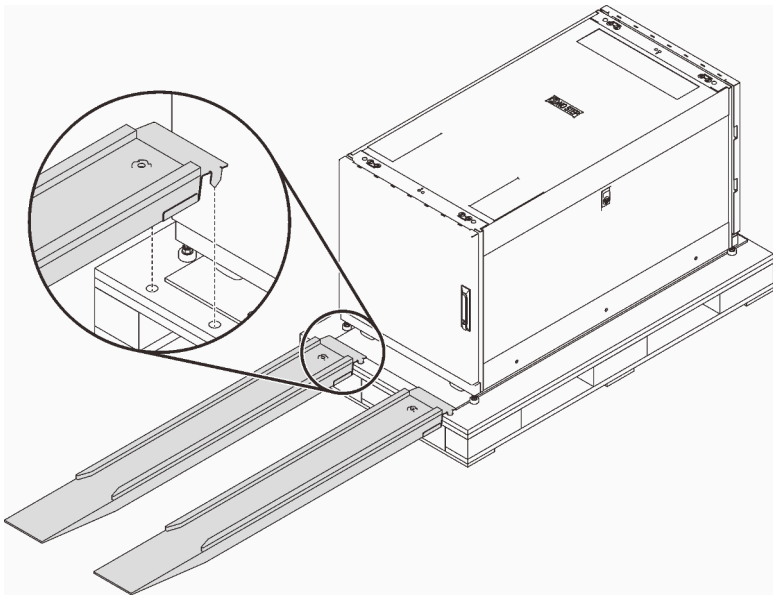

Figure 5. Installing the ramps

Step 2. Make sure the leveling feet are up. If not, insert a 13-mm open-ended wrench into the screw above one of the feet, and turn it counterclockwise until it no longer makes firm contact with the floor. Then, repeat this procedure on the other three feet.

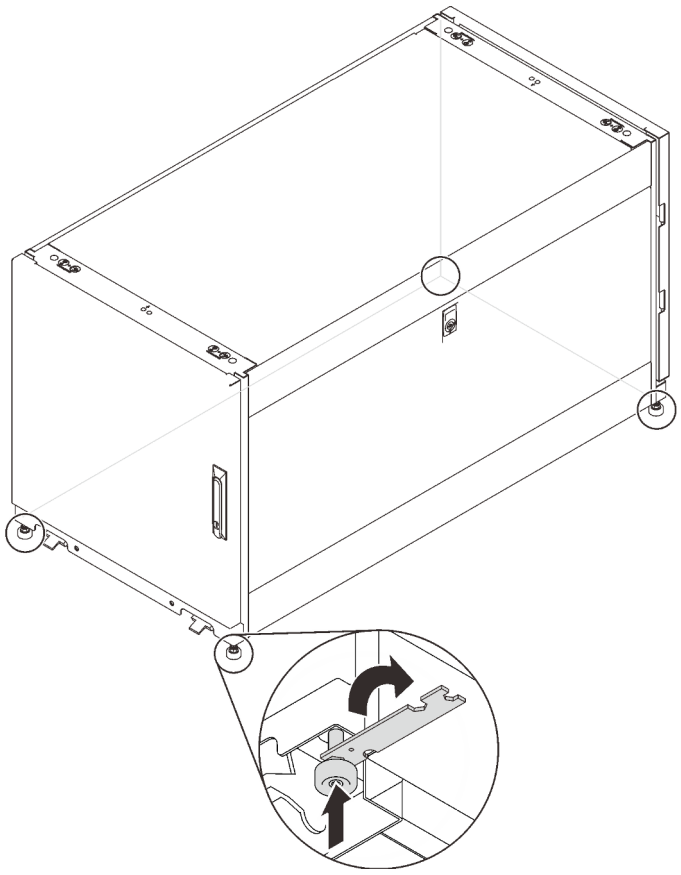

Figure 6. Adjusting the rack cabinet feet

Step 3. Push the cabinet from either the front or the rear until it reaches the designated site.

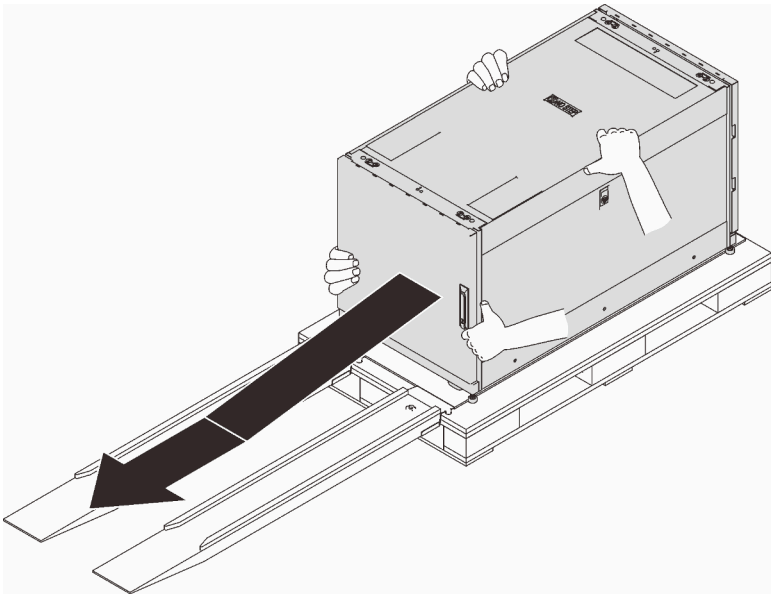

Figure 7. Sliding the cabinet down from the pallet

Notes:

- Make sure that more than two people are handling the cabinet while sliding it down from the ramps.
- Do not stand in the path of the rack.

Crane lifter

Attention - Drop hazard.

Complete the following steps to lift and move the cabinet to the designated site:

Step 1. Remove the four plugs from the four corners on the top of the cabinet frame.

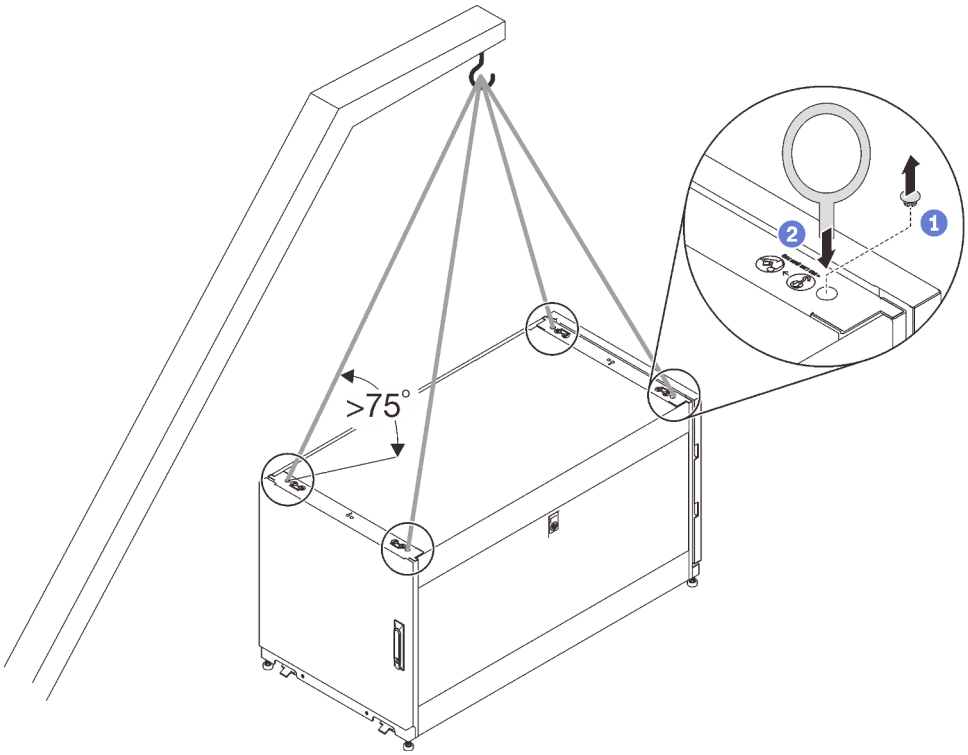

Figure 8. Lifting the rack cabinet

Step 2. Install one M10 eye bolt to each hole, and make sure they stay solidly connected to the cabinet.

Step 3. Connect the four eye bolts to the hook of a crane lifter, and make sure the cord length allows an angle more than 75°.

Step 4. Lift the cabinet and place it to the designated site.

After moving the cabinet to the designated site, complete the following steps:

1. Make sure the leveling feet are down and make firm contact to the ground. If not, insert a 13-mm open-ended wrench into the screw above one of the feet, and turn it clockwise until the foot makes firm contact with the floor.

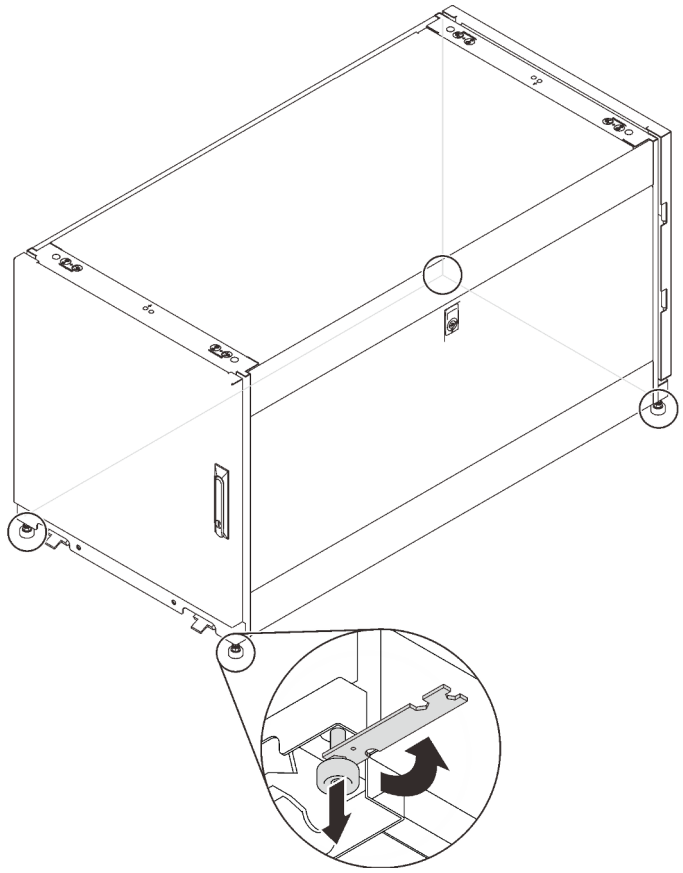

Figure 9. Adjusting rack cabinet feet

2. Repeat the same procedure on the other three feet until the cabinet is levelled with balance. To make sure the cabinet is balanced, slightly push the cabinet and make sure it does not shake or tilt.

   Note: The leveling feet provide a stable base if the floor is slightly uneven, but they cannot compensate for a badly sloped surface.

3. Connect the grounding cable.

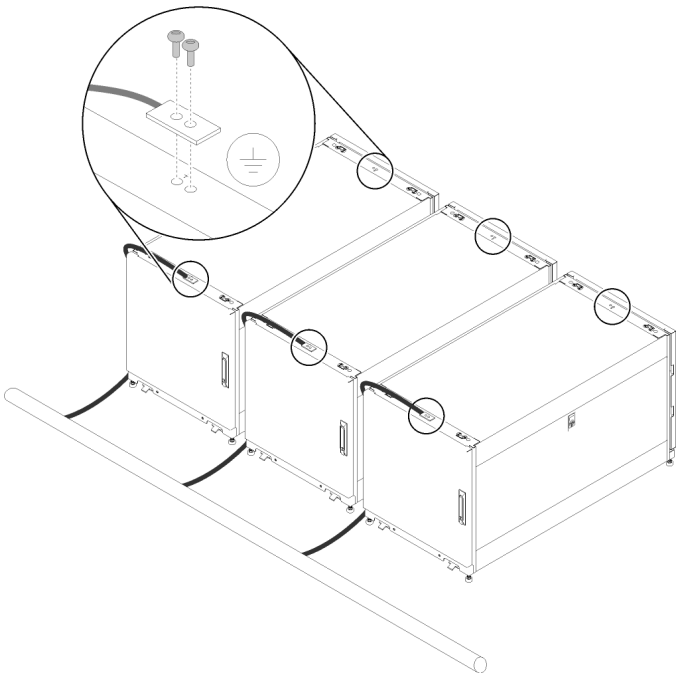

Figure 10. Connecting the grounding cable

4. To secure the cabinet to the ground, you can reinstall the bolt-down brackets that were removed earlier.

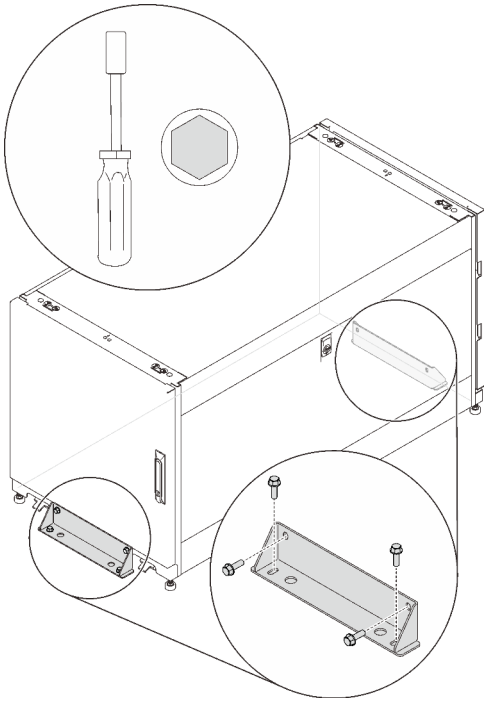

Figure 11. Installing the bolt-down brackets

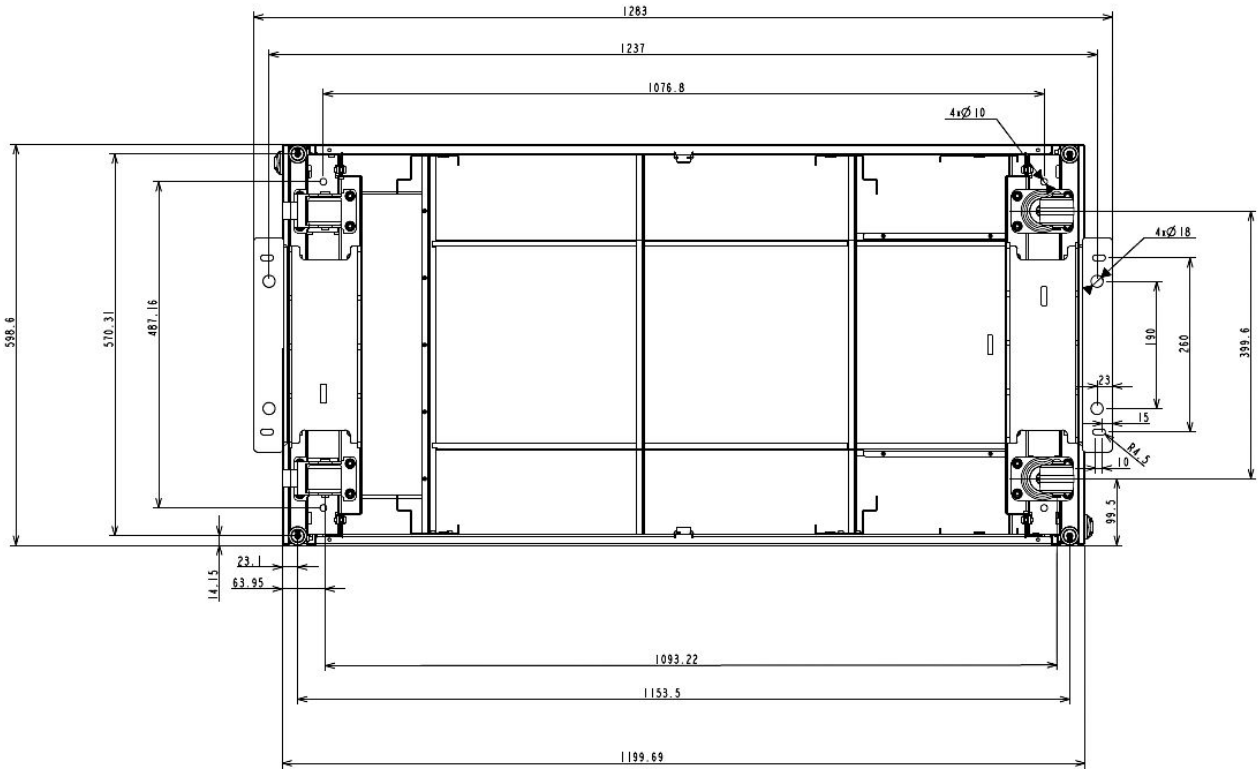

Figure 12. Rack cabinet with bolt-down brackets installed

Chapter 5. Managing cables

See this section to learn how to manage cables for the rack cabinet.

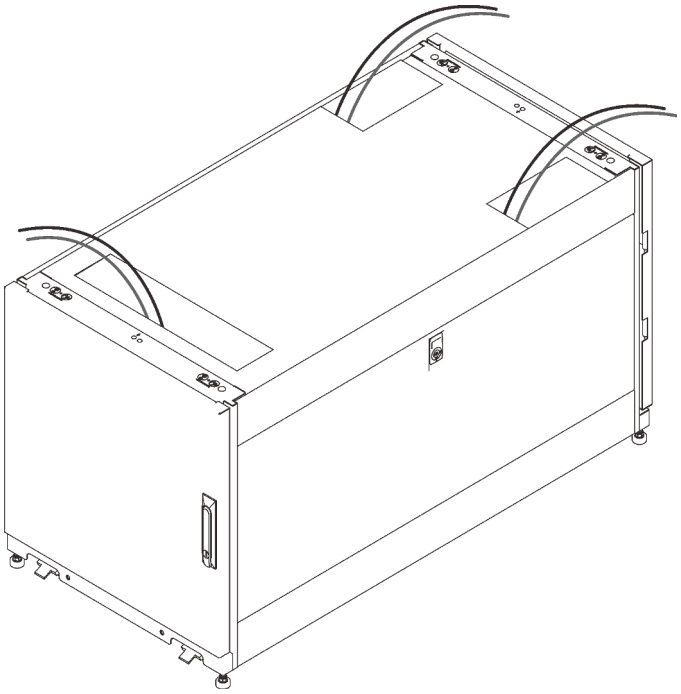

Figure 13. Managing cables

Route the cables that are connected to the servers out of the cabinet from the roof holes as illustrated. If necessary, secure the cables with the straps that come in the hardware bag.

© Copyright Lenovo 2020, 2024

Chapter 6. Hardware removal, installation and conversion

See this section for hardware replacement and conversion.

Removing and installing the side panels

Follow the instructions in this section to remove and install the side panels.

Remove the side panels

Complete the following steps to remove the side panels.

Procedure

Step 1. Acquire the key that comes with the cabinet.

Step 2. Insert the key that comes with the rack cabinet into the key hole on the side panel, and turn it clockwise to unlock the panel.

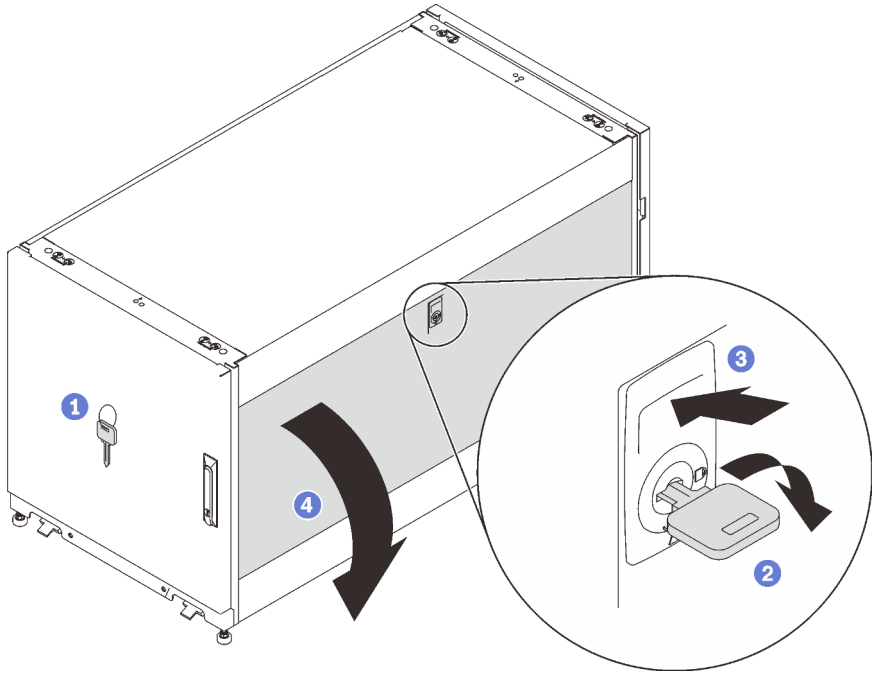

Figure 14. Removing the side panel

Step 3. Press on the latch above the key hole to release the side panel.

Step 4. Pivot the top of the panel away from the cabinet frame to remove it.

Install the side panels

Complete the following steps to install the side panels.

Procedure

© Copyright Lenovo 2020, 2024

Step 1. Align the bottom of the panel to the slot on the bottom of the cabinet frame, and pivot the top of the panel towards the cabinet frame.

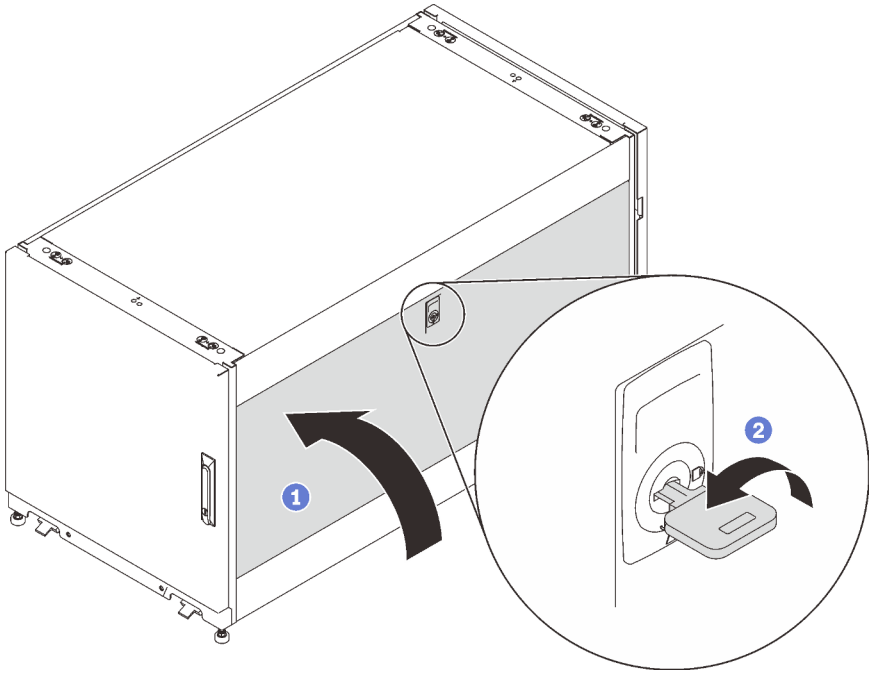

Figure 15. Installing the side panel

Step 2. Insert the key and turn it counterclockwise to secure the panel to the cabinet frame.

Removing, installing and reversing the doors

Follow the instructions in this section to remove, install, and reverse the doors.

Remove the door

Follow the instructions in this section to remove the cabinet door.

About this task

Note: For safety, this task must be done by two people.

1. If necessary, insert the key and turn it clockwise to unlock the door.
2. Pull the lower end of the handle up and clockwise; then, open the door.

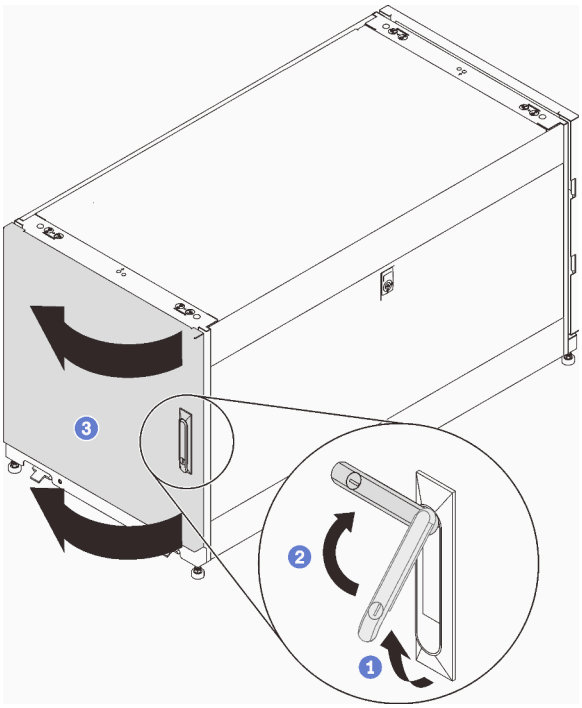

Figure 16. Opening the door

3. Disconnect the grounding strap.

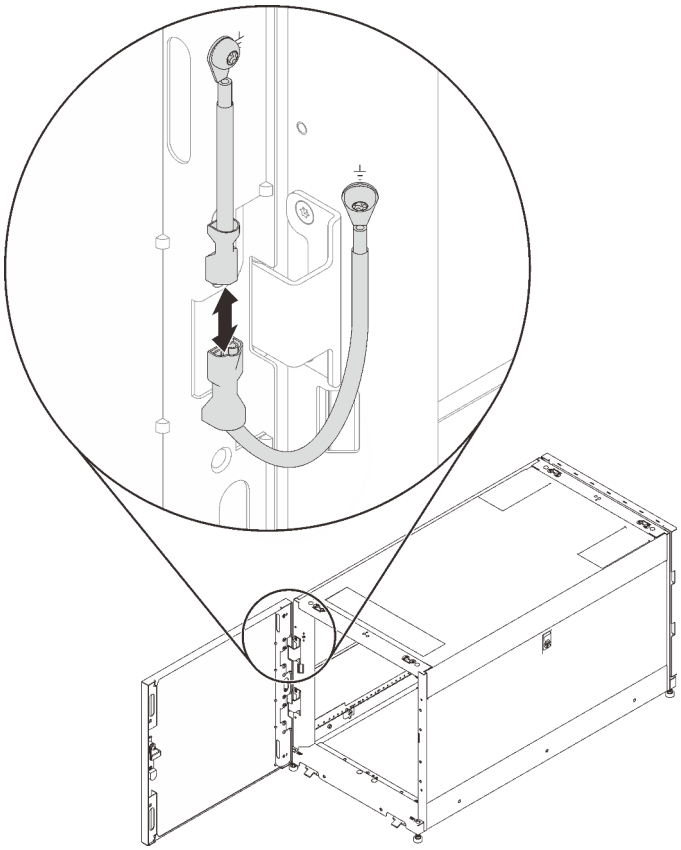

Figure 17. Disconnecting the grounding strap

Procedure

Step 1. Lift the door to disengage the hinge, and remove the door from the cabinet frame.

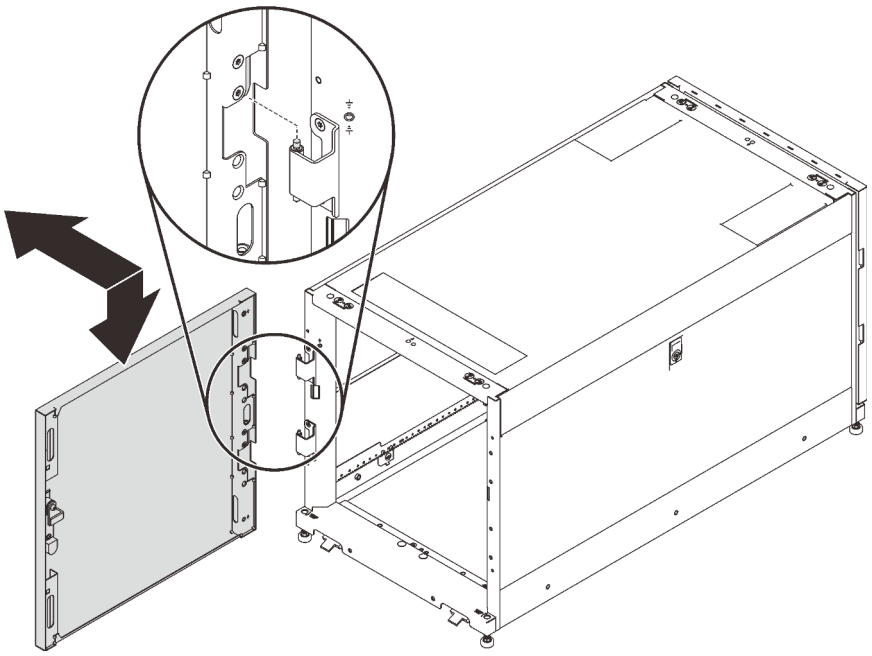

Figure 18. Disengaging the door hinge

Install the door

Follow the instructions in this section to install the cabinet door.

About this task

Note: For safety, this task must be done by two people.

Procedure

Step 1. Align the brackets on the door to the hinge on the cabinet frame, and lower the door until it is secured to the cabinet frame.

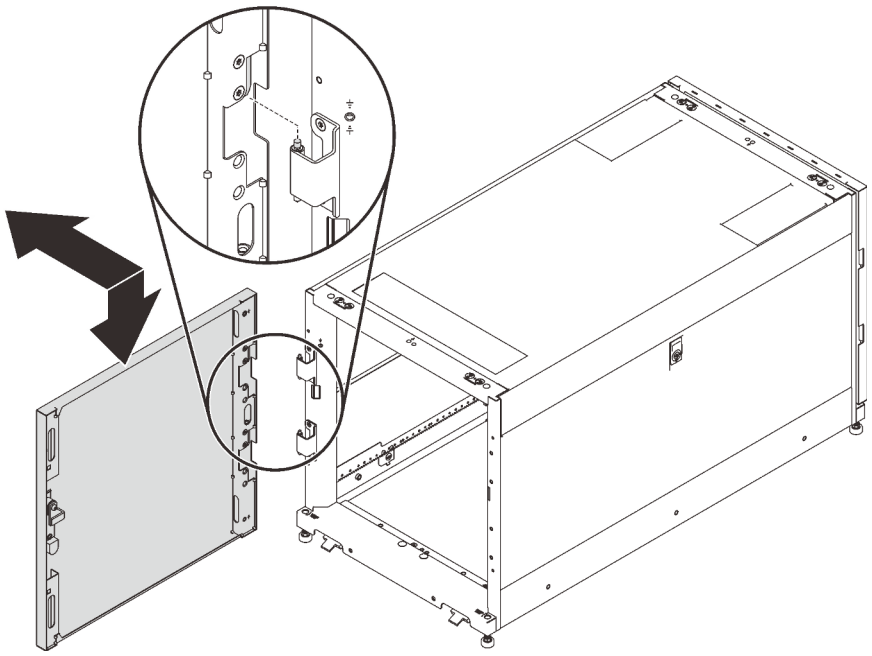

Figure 19. Installing the door

After this task is completed

1. Connect the grounding strap.

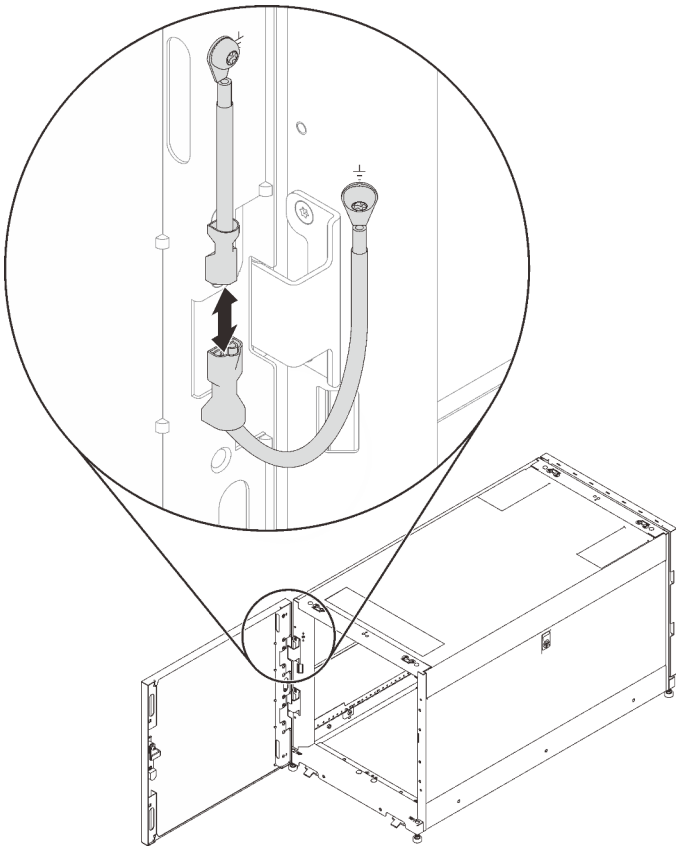

Figure 20. Connecting the grounding strap

2. Close the cabinet door, and turn the door handle counterclockwise to secure it.

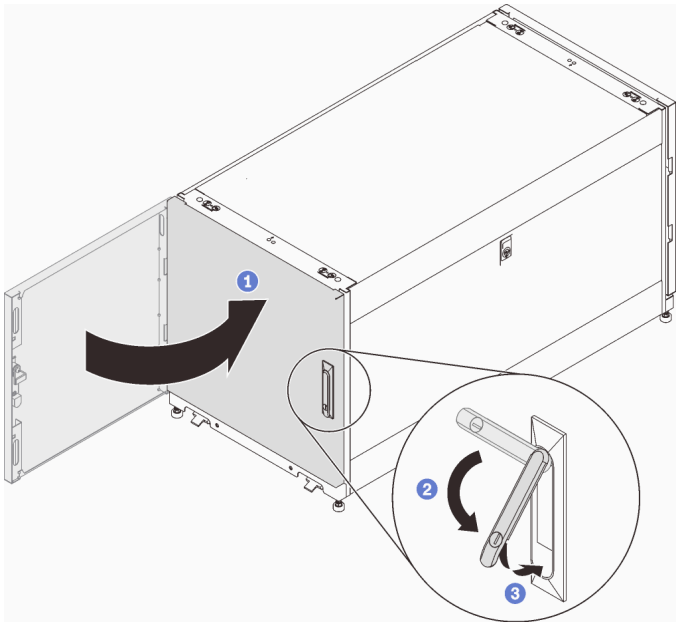

Figure 21. Closing the cabinet door

3. If necessary, insert the key and turn it counterclockwise to lock the door.

Reverse the door

Both the doors of this cabinet are reversible. Follow the instructions in this section to reverse the cabinet door.

About this task

Note: For safety, this task must be done by two people.

1. If necessary, insert the key and turn it clockwise to unlock the door.
2. Pull the lower end of the handle up and clockwise; then, open the door.

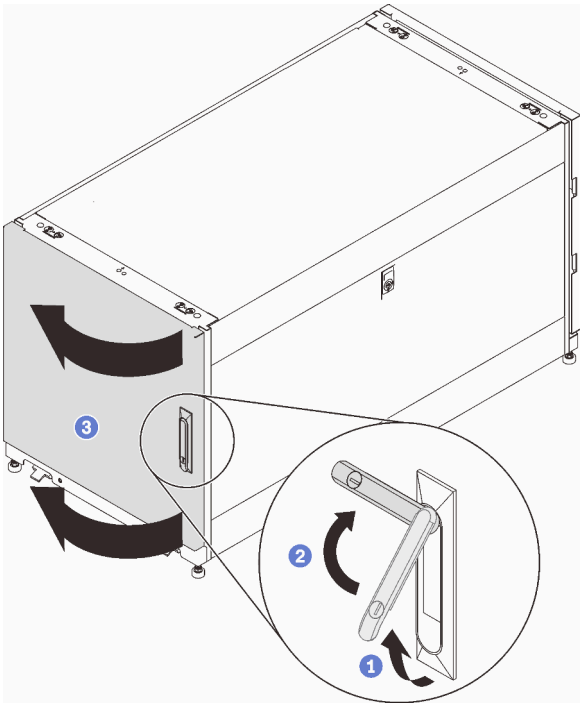

Figure 22. Opening the door

Procedure

Step 1. Disconnect and remove the grounding cables.

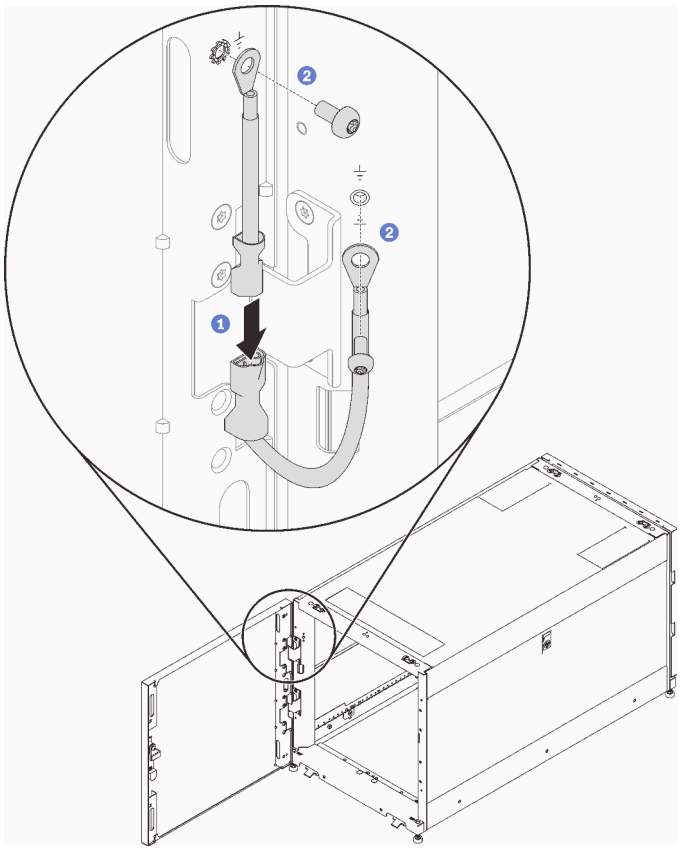

Figure 23. Removing the grounding cables

Step 2. Lift the door to disengage the hinge, and remove the door from the cabinet frame.

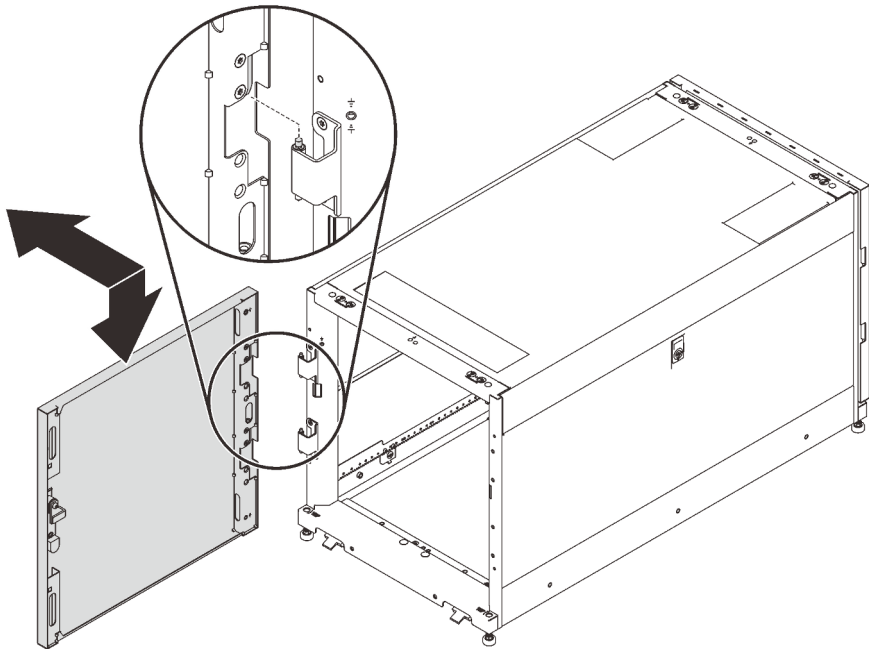

Figure 24. Disengaging the door hinge

Step 3. Remove the hinges from the cabinet frame; then, rotate them 180 degree, and install them to the opposite site of the frame.

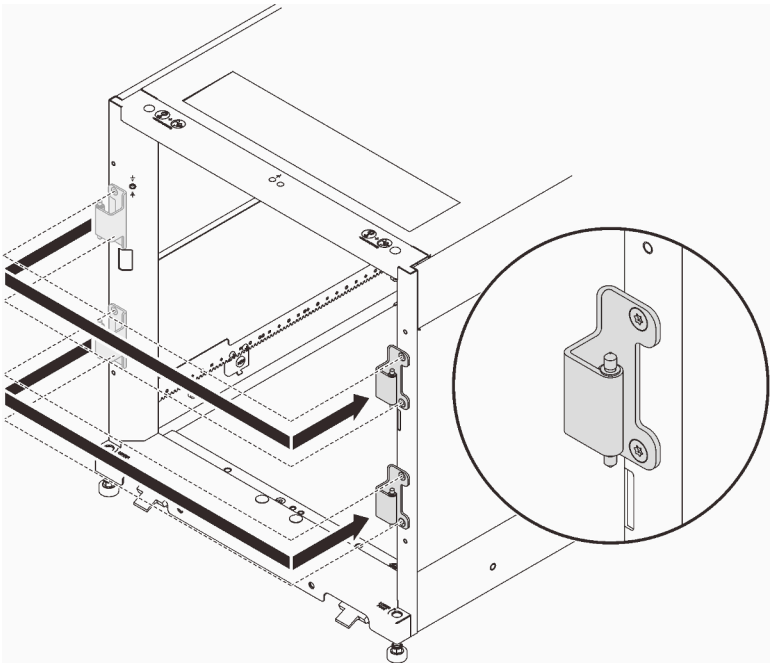

Figure 25. Converting the cabinet frame hinges

Step 4. If the cabinet comes with door position monitor devices, complete the following steps to remove and reinstall the devices.

a. Remove the two screws that secure the door position monitor device to the cabinet frame.

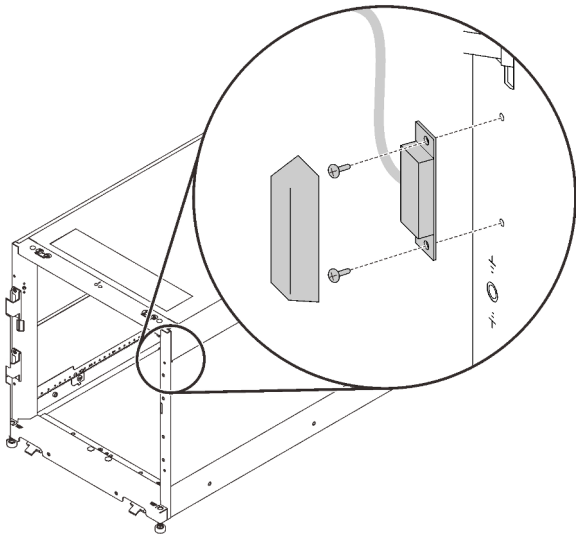

Figure 26. Removing the door position monitor device

b. Install the device to the equivalent location on the opposite side on the cabinet frame.

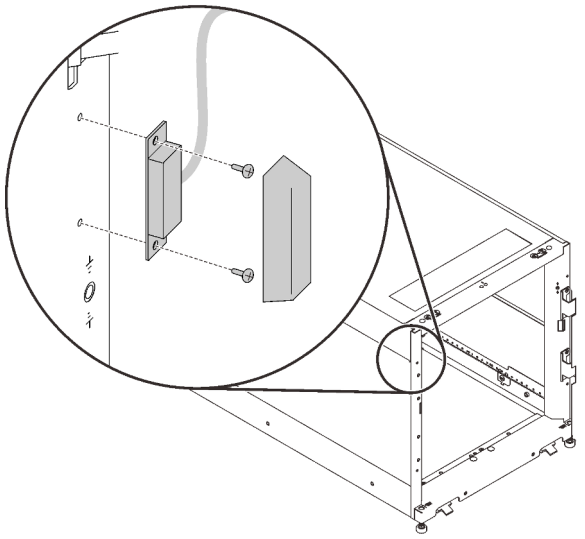

Figure 27. Removing the door position monitor device

c. Remove the device from the door, and install it to the equivalent location on the opposite side of the door.

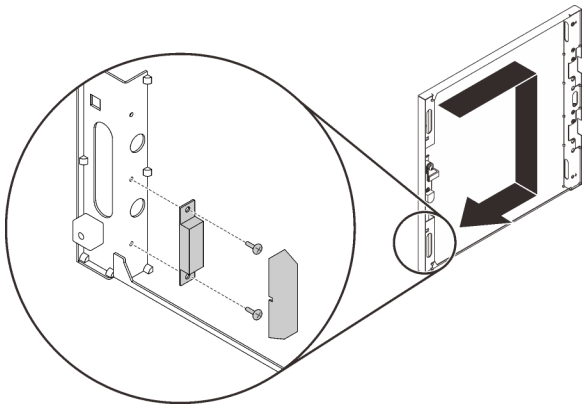

Figure 28. Removing the door position monitor device

Step 5. Remove the two brackets from the door; then, install them to the holes that are directly below the original ones.

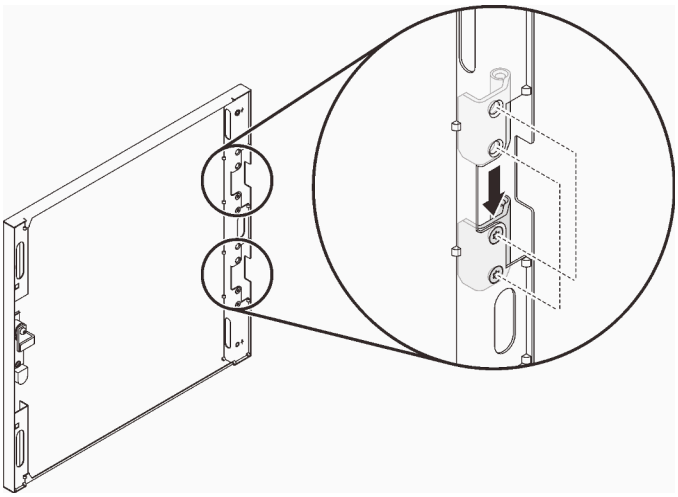

Figure 29. Converting the door hinges

Step 6. Remove the screws that secure the handle to the door; then, rotate the door 180 degree while keeping the handle in the original orientation, and secure the handle to the door with screws.

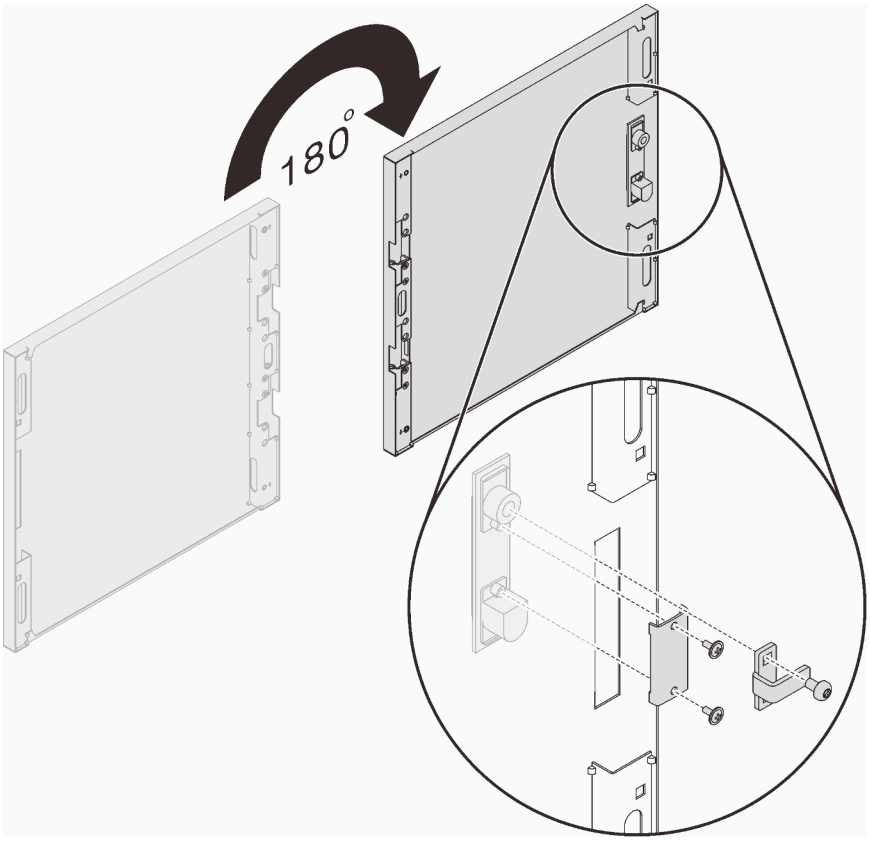

Figure 30. Converting the door handle

Step 7. Align the brackets on the door to the hinge on the cabinet frame, and lower the door until it is secured to the cabinet frame.

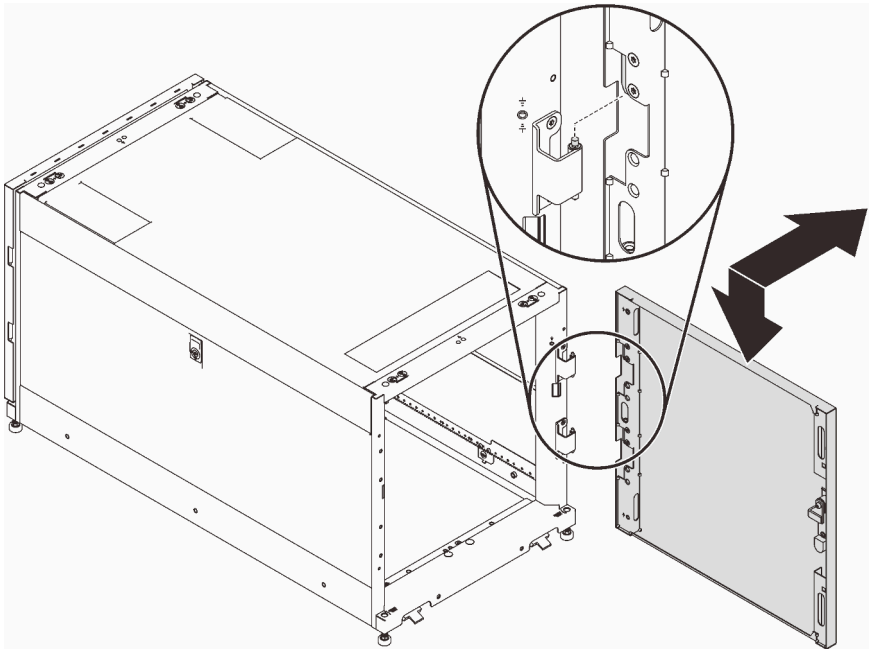

Figure 31. Installing the door

After this task is completed

1. Install and connect the grounding cables.

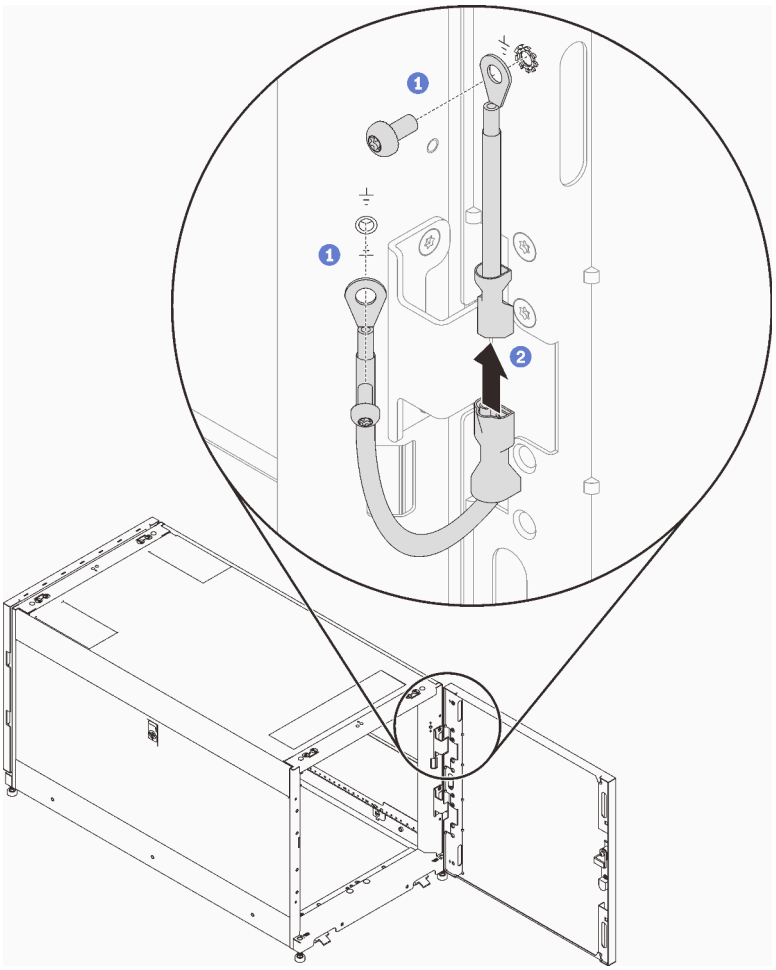

Figure 32. Installing the grounding cables

2. Close the cabinet door, and turn the door handle counterclockwise to secure it.

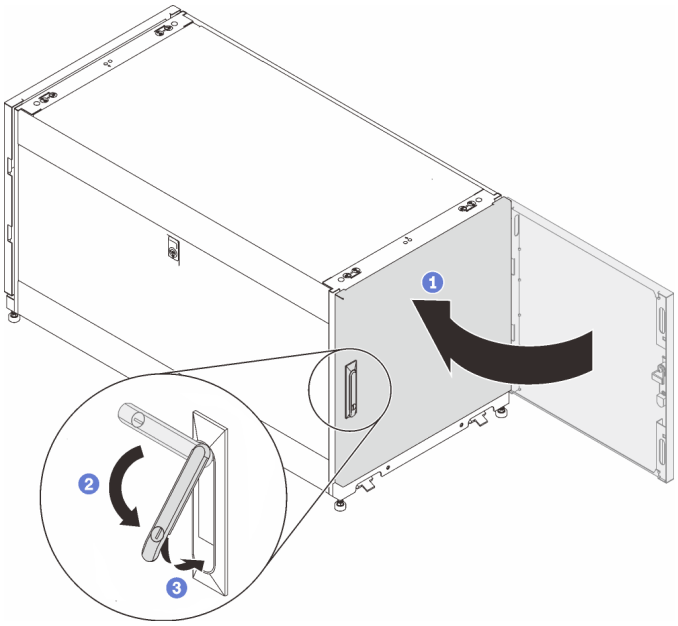

Figure 33. Closing the cabinet door

3. If necessary, insert the key and turn it counterclockwise to lock the door.

Door position monitor device replacement

See this section for replacement of the door position monitor device.

Note: This component is a Third Party Option parts. Not with standing anything to the contrary, third party options are excluded from Lenovo Statement of Limited Warranty. See https://support.lenovo.com/us/en/solutions/ht510461 for details.

Some cabinets might come with the following devices:

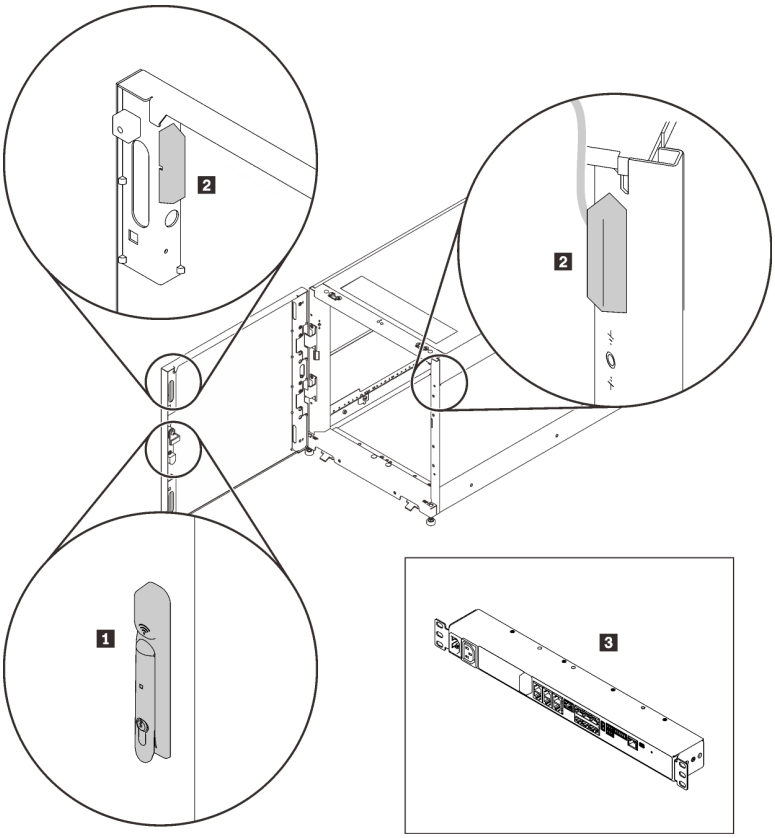

Figure 34. Door position monitor devices

- 1 Electronics lock
- 2 Door position monitor magnet and switch
- 3 Environmental monitoring appliance

In this case, contact the following for technical support and service with these devices.

- Phone number: +86-400-810-1315 (English/Chinese). Service hours: (UTC+8):
  - **Monday-Friday:** 08:15-18:00
  - **Saturday:** 09:00-17:00
- E-mail address: itbtech.support@schneider-electric.com
- Service website: https://www.schneider-electric.cn/zh/work/services/

Download the latest version of the *User Guide* from the applicable product page of https://www.apc.com. To find a product page, enter the part number (NBRK0250) into the search field. You can also find the documentation on https://www.se.com: enter the part number in the search field, and select **Documents and Software** under **Product information**.

Remove the door position monitor device

Follow the instructions in this section to remove the door position monitor device.

About this task

1. If necessary, insert the key and turn it clockwise to unlock the door.
2. Pull the lower end of the handle up and clockwise; then, open the door.

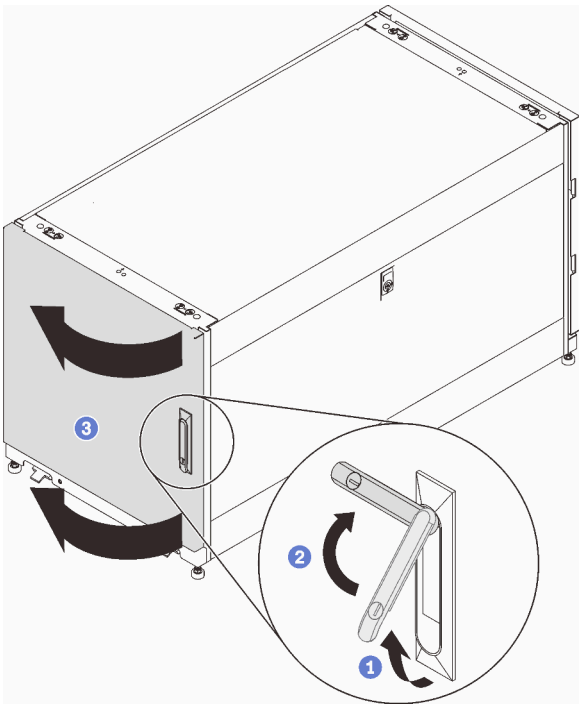

Figure 35. Opening the door

Procedure

Step 1. Remove the two screws that secure the door position monitor device to the cabinet frame.

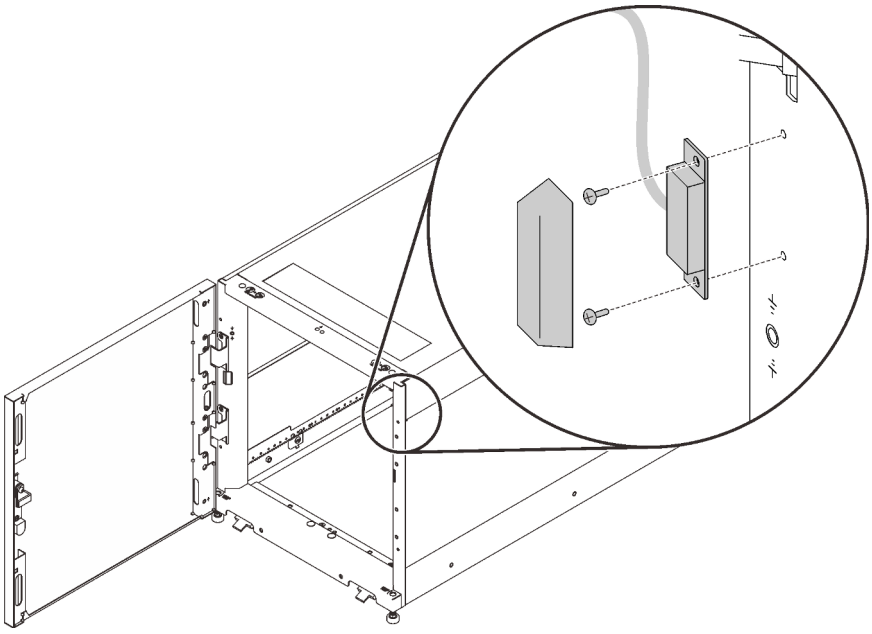

Figure 36. Removing the door position monitor device

Install the door position monitor device

Follow the instructions in this section to install the door position monitor device.

Procedure

Step 1. Secure the device to the cabinet frame with two screws.

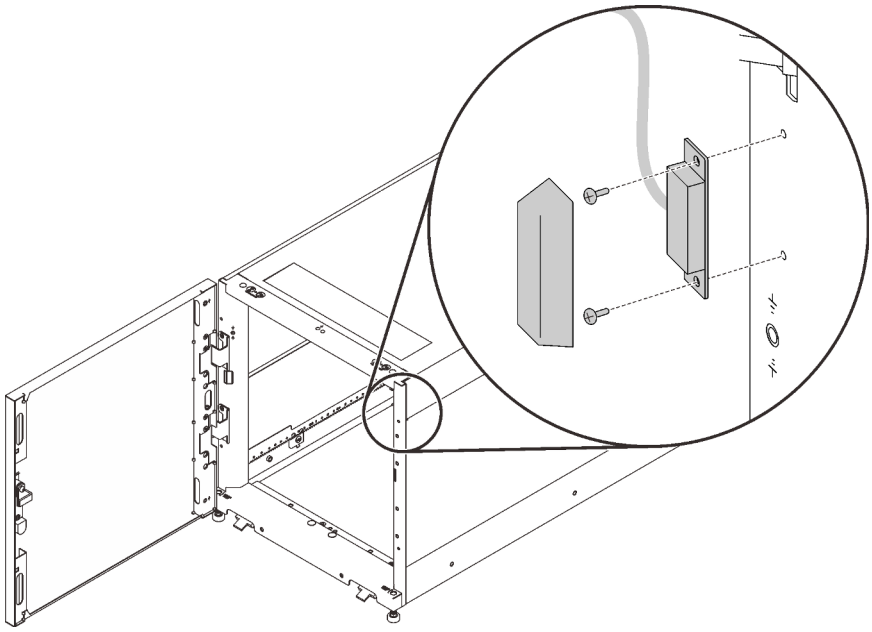

Figure 37. Installing the door position monitor device

After this task is completed

1. Close the cabinet door, and turn the door handle counterclockwise to secure it.

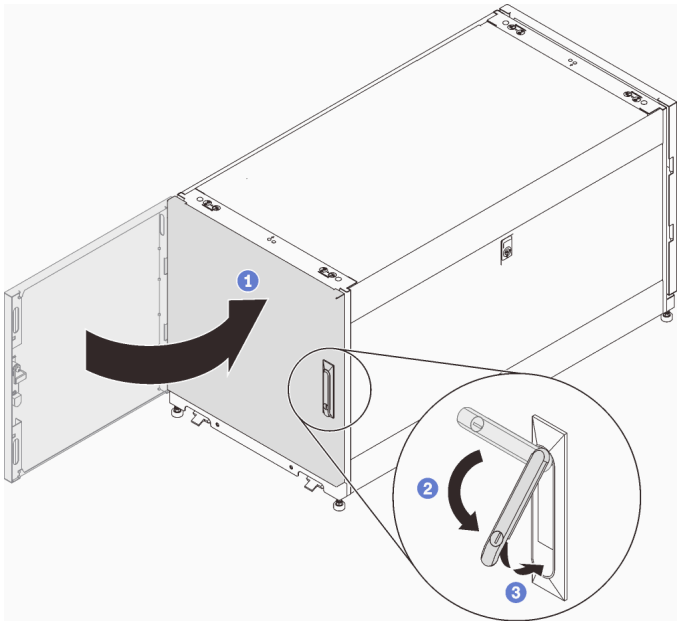

Figure 38. Closing the cabinet door

2. If necessary, insert the key and turn it counterclockwise to lock the door.

Appendix A. Getting help and technical assistance

If you need help, service, or technical assistance or just want more information about Lenovo products, you will find a wide variety of sources available from Lenovo to assist you.

On the World Wide Web, up-to-date information about Lenovo systems, optional devices, services, and support are available at:

http://datacentersupport.lenovo.com

Note: This section includes references to IBM web sites and information about obtaining service. IBM is Lenovo's preferred service provider for ThinkSystem.

Before you call

Before you call, there are several steps that you can take to try and solve the problem yourself. If you decide that you do need to call for assistance, gather the information that will be needed by the service technician to more quickly resolve your problem.

Attempt to resolve the problem yourself

You can solve many problems without outside assistance by following the troubleshooting procedures that Lenovo provides in the online help or in the Lenovo product documentation. The Lenovo product documentation also describes the diagnostic tests that you can perform. The documentation for most systems, operating systems, and programs contains troubleshooting procedures and explanations of error messages and error codes. If you suspect a software problem, see the documentation for the operating system or program.

You can find the product documentation for your ThinkSystem products at the following location:

http://thinksystem.lenovofiles.com/help/index.jsp

You can take these steps to try to solve the problem yourself:

- Check all cables to make sure that they are connected.
- Check the power switches to make sure that the system and any optional devices are turned on.
- Check for updated software, firmware, and operating-system device drivers for your Lenovo product. The Lenovo Warranty terms and conditions state that you, the owner of the Lenovo product, are responsible for maintaining and updating all software and firmware for the product (unless it is covered by an additional maintenance contract). Your service technician will request that you upgrade your software and firmware if the problem has a documented solution within a software upgrade.
- If you have installed new hardware or software in your environment, check http://www.lenovo.com/us/en/serverproven/ to make sure that the hardware and software is supported by your product.
- Go to http://datacentersupport.lenovo.com and check for information to help you solve the problem.
  - Check the Lenovo forums at https://forums.lenovo.com/t5/Datacenter-Systems/ct-p/sv_eg to see if someone else has encountered a similar problem.

You can solve many problems without outside assistance by following the troubleshooting procedures that Lenovo provides in the online help or in the Lenovo product documentation. The Lenovo product documentation also describes the diagnostic tests that you can perform. The documentation for most systems, operating systems, and programs contains troubleshooting procedures and explanations of error

© Copyright Lenovo 2020, 2024

messages and error codes. If you suspect a software problem, see the documentation for the operating system or program.

Gathering information needed to call Support

If you believe that you require warranty service for your Lenovo product, the service technicians will be able to assist you more efficiently if you prepare before you call. You can also see http://datacentersupport.lenovo.com/warrantylookup for more information about your product warranty.

Gather the following information to provide to the service technician. This data will help the service technician quickly provide a solution to your problem and ensure that you receive the level of service for which you might have contracted.

- Hardware and Software Maintenance agreement contract numbers, if applicable
- Machine type number (Lenovo 4-digit machine identifier)
- Model number
- Serial number
- Current system UEFI and firmware levels
- Other pertinent information such as error messages and logs

As an alternative to calling Lenovo Support, you can go to https://www-947.ibm.com/support/servicerequest/Home.action to submit an Electronic Service Request. Submitting an Electronic Service Request will start the process of determining a solution to your problem by making the pertinent information available to the service technicians. The Lenovo service technicians can start working on your solution as soon as you have completed and submitted an Electronic Service Request.

Contacting Support

You can contact Support to obtain help for your issue.

You can receive hardware service through a Lenovo Authorized Service Provider. To locate a service provider authorized by Lenovo to provide warranty service, go to https://datacentersupport.lenovo.com/serviceprovider and use filter searching for different countries. For Lenovo support telephone numbers, see https://datacentersupport.lenovo.com/supportphonelist for your region support details.

Appendix B. Notices

Lenovo may not offer the products, services, or features discussed in this document in all countries. Consult your local Lenovo representative for information on the products and services currently available in your area.

Any reference to a Lenovo product, program, or service is not intended to state or imply that only that Lenovo product, program, or service may be used. Any functionally equivalent product, program, or service that does not infringe any Lenovo intellectual property right may be used instead. However, it is the user's responsibility to evaluate and verify the operation of any other product, program, or service.

Lenovo may have patents or pending patent applications covering subject matter described in this document. The furnishing of this document is not an offer and does not provide a license under any patents or patent applications. You can send inquiries in writing to the following:

Lenovo (United States), Inc.
1009 Think Place
Morrisville, NC 27560
U.S.A.
Attention: Lenovo VP of Intellectual Property

LENOVO PROVIDES THIS PUBLICATION “AS IS” WITHOUT WARRANTY OF ANY KIND, EITHER EXPRESS OR IMPLIED, INCLUDING, BUT NOT LIMITED TO, THE IMPLIED WARRANTIES OF NON-INFRINGEMENT, MERCHANTABILITY OR FITNESS FOR A PARTICULAR PURPOSE. Some jurisdictions do not allow disclaimer of express or implied warranties in certain transactions, therefore, this statement may not apply to you.

This information could include technical inaccuracies or typographical errors. Changes are periodically made to the information herein; these changes will be incorporated in new editions of the publication. Lenovo may make improvements and/or changes in the product(s) and/or the program(s) described in this publication at any time without notice.

The products described in this document are not intended for use in implantation or other life support applications where malfunction may result in injury or death to persons. The information contained in this document does not affect or change Lenovo product specifications or warranties. Nothing in this document shall operate as an express or implied license or indemnity under the intellectual property rights of Lenovo or third parties. All information contained in this document was obtained in specific environments and is presented as an illustration. The result obtained in other operating environments may vary.

Lenovo may use or distribute any of the information you supply in any way it believes appropriate without incurring any obligation to you.

Any references in this publication to non-Lenovo Web sites are provided for convenience only and do not in any manner serve as an endorsement of those Web sites. The materials at those Web sites are not part of the materials for this Lenovo product, and use of those Web sites is at your own risk.

Any performance data contained herein was determined in a controlled environment. Therefore, the result obtained in other operating environments may vary significantly. Some measurements may have been made on development-level systems and there is no guarantee that these measurements will be the same on generally available systems. Furthermore, some measurements may have been estimated through extrapolation. Actual results may vary. Users of this document should verify the applicable data for their specific environment.

© Copyright Lenovo 2020, 2024

Trademarks

Lenovo, the Lenovo logo, Micro DataCenter, ThinkSystem, Flex System, System x, NeXtScale System, and X Architecture are trademarks of Lenovo in the United States, other countries, or both.

Intel and Intel Xeon are trademarks of Intel Corporation in the United States, other countries, or both.

Internet Explorer, Microsoft, and Windows are trademarks of the Microsoft group of companies.

Linux is a registered trademark of Linus Torvalds.

Other company, product, or service names may be trademarks or service marks of others.

Index

C

creating a personalized support web page 35
custom support web page 35

D

door 18, 21, 24

G

Getting help 35

H

hardware service and support telephone numbers 36
help 35

I

install 18, 21
  door position monitor device 33
introduction 1

M

managing cables 15

N

notices 37

R

remove
  door position monitor device 32
reverse 24

S

safety iii
safety statement iv
service and support
  before you call 35
  hardware 36
  software 36
software service and support telephone numbers 36
specifications 3
support web page, custom 35

T

telephone numbers 36
ThinkSystem Micro DataCenter iv, 1
ThinkSystem Micro DataCenter 12U Rack Cabinet 3, 5, 32
trademarks 38

© Copyright Lenovo 2020, 2024

Lenovo

Part Number: SP47A41857

Printed in China

(1P) P/N: SP47A41857