Lenovo

ThinkSystem Micro DataCenter 6U 1200mm Deep Rack Cabinet User Guide

Machine Type: 7D3H and 7D3J

First Edition (June 2020)

© Copyright Lenovo 2020.
LIMITED AND RESTRICTED RIGHTS NOTICE: If data or software is delivered pursuant to a General Services Administration (GSA) contract, use, reproduction, or disclosure is subject to restrictions set forth in Contract No. GS-35F-05925.

Contents

Contents i

Safety iii

Safety statement iv

Chapter 1. Introduction 1

Chapter 2. Specifications 3

Supported servers 3

Chapter 3. Parts Listing 5

Chapter 4. Moving the rack cabinet . . . 7

Casters 9

Crane lifter 10

Chapter 5. Managing cables 15

Grounding cable 15

Chapter 6. Installing optional kits . . . 19

Installing the rail kits 19

Install the rail kit and SE350 E1 Enclosure (1U2N) 19

Install the rail kit and SR250 25

Install the rail kit and SR670 30

Install the DPI universal rack power distribution unit. 37

Installing switches 39

Installing uninterruptible power systems (UPS) . . . 40

Chapter 7. Hardware removal, installation and conversion 41

Removing and installing the side panels 41

Remove the side panels 41

Install the side panels 41

Removing, installing and reversing the doors . . . 42

Remove the door 42

Install the door 44

Reverse the door 45

Door position monitor device replacement 52

Remove the door position monitor device . . . 53

Install the door position monitor device 53

Appendix A. Getting help and technical assistance 55

Before you call 55

Contacting Support 56

Appendix B. Notices 57

Trademarks 58

Index 59

© Copyright Lenovo 2020

Safety

Before installing this product, read the Safety Information.

قبل تركيب هذا المنتج، يجب قراءة الملاحظات الآمنية

Antes de instalar este produto, leia as Informações de Segurança.

在安装本产品之前，请仔细阅读 Safety Information
(安全信息)。

安裝本產品之前，請先閱讀「安全資訊」。

Prije instalacije ovog produkta obavezno pročitajte Sigurnosne Upute.

Před instalací tohoto produktu si přečtěte příručku bezpečnostních instrukcí.

Læs sikkerhedsforskrifterne, før du installerer dette produkt.

Lees voordat u dit product installeert eerst de veiligheidsvoorschriften.

Ennen kuin asennat tämän tuotteen, lue turvaohjeet kohdasta Safety Information.

Avant d'installer ce produit, lisez les consignes de sécurité.

Vor der Installation dieses Produkts die Sicherheitshinweise lesen.

Πριν εγκαταστήσετε το προϊόν αυτό, διαβάστε τις πληροφορίες ασφάλειας
(safety information).

.לפני שתתקינו מוצר זה, קראו את הוראות הבטיחות

A termék telepítése előtt olvassa el a Biztonsági előírásokat!

Prima di installare questo prodotto, leggere le Informazioni sulla Sicurezza.

製品の設置の前に、安全情報をお読みください。

본 제품을 설치하기 전에 안전 정보를 읽으십시오.

Пред да се инсталира овој продукт, прочитајте информацијата за безбедност.

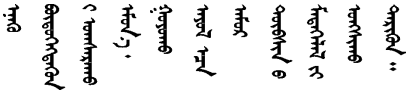

Les sikkerhetsinformasjonen (Safety Information) før du installerer dette produktet.

Przed zainstalowaniem tego produktu, należy zapoznać się
z książką "Informacje dotyczące bezpieczeństwa" (Safety Information).

Antes de instalar este produto, leia as Informações sobre Segurança.

© Copyright Lenovo 2020

Перед установкой продукта прочтите инструкции по
технике безопасности.

Pred inštaláciou tohto zariadenia si pečítaje Bezpečnostné predpisy.

Pred namestitvijo tega proizvoda preberite Varnostne informacije.

Antes de instalar este producto, lea la información de seguridad.

Läs säkerhetsinformationen innan du installerar den här produkten.

ཐོན་རྫས་འདི་བདེ་སྤྱོད་མ་བྱས་གོང་། ་སྐོར་གྱི་ཡིད་གཟབ་
བྱ་འདྲ་མིན་ཡོད་པའི་འོད་སྡེར་བལྟ་དགོས།

Bu ürünü kurmadan önce güvenlik bilgilerini okuyun.

مەزكۇر مەھسۇلاتنى ئورنىتىشتىن بۇرۇن بىخەتەرلىك ئۇچۇرلىرىنى ئوقۇپ چىقىڭ.

Youq mwngz yungh canjbinj neix gaxgonq, itdingh aeu doeg aen
canjbinj soengq cungj vahgangj ancien siusik.

Safety statement

Read this section carefully before operating any task on the cabinet.

R001

CAUTION:
To ensure safety, all configurations of the rack cabinet must be certified by a nationally recognized testing laboratory to verify compliance with country-specific safety regulations. This process ensures that the end product remains safe for the operator and service personnel under normal and foreseeable misuse conditions.

R002

DANGER

- **Always lower the leveling pads on the rack cabinet.**
- **Always install stabilizer brackets on the rack cabinet.**
- **Always install the heaviest devices in the bottom of the rack cabinet.**
- **Always install servers and optional devices starting from the bottom of the rack cabinet.**

R003

DANGER

- **Do not extend more than one sliding device at a time.**
- **The maximum allowable weight for a device on slide rails is 80 kg (176 lb). Do not install a sliding device that exceeds this weight.**

S029

DANGER

Electrical current from power, telephone, and communication cables is hazardous.
To avoid a shock hazard:

- **Do not connect or disconnect any cables or perform installation, maintenance, or reconfiguration of this product during an electrical storm.**
- **Connect all power cords to a properly wired and grounded power source.**
- **Connect to properly wired power sources any equipment that will be attached to this product.**
- **When possible, use one hand only to connect or disconnect signal cables.**
- **Never turn on any equipment when there is evidence of fire, water, or structural damage.**
- **Disconnect the attached ac power cords, dc power sources, network connections, telecommunications systems, and serial cables before you open the device covers, unless you are instructed otherwise in the installation and configuration procedures.**
- **Connect and disconnect cables as described in the following table when installing, moving, or opening covers on this product or attached devices.**

To Connect:

1. Turn OFF all power sources and equipment that is to be attached to this product.
2. Attach signal cables to the product.
3. Attach power cords to the product.
   - For ac systems, use appliance inlets.
   - For dc systems, ensure correct polarity of -48 V dc connections: RTN is + and -48 V dc is -. Earth ground should use a two-hole lug for safety.
4. Attach signal cables to other devices.
5. Connect power cords to their sources.
6. Turn ON all the power sources.

To Disconnect:

1. Turn OFF all power sources and equipment that is to be attached to this product.
   - For ac systems, remove all power cords from the chassis power receptacles or interrupt power at the ac power distribution unit.
   - For dc systems, disconnect dc power sources at the breaker panel or by turning off the power source. Then, remove the dc cables.
2. Remove the signal cables from the connectors.
3. Remove all cables from the devices.

© Copyright Lenovo 2020

S036

18 - 32 kg (39 - 70 lb)

32 - 55 kg (70 - 121 lb)

> 55 kg (121 lb)

CAUTION:
Use safe practices when lifting.

R006

CAUTION:
Do not place any object on top of a rack-mounted device unless that rack-mounted device is intended for use as a shelf.

R007

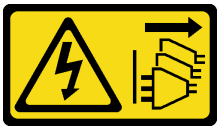

DANGER

- **Connect power cords from devices in the rack cabinet to electrical outlets that are near the rack cabinet and are easily accessible.**
- **Each rack cabinet might have more than one power cord. Be sure to disconnect all power cords in the rack cabinet before you service any device in the rack cabinet.**
- **Install an emergency-power-off switch if more than one power device (power distribution unit or uninterruptible power supply) is installed in the same rack cabinet.**
- **Connect all devices that are installed in a rack cabinet to power devices that are installed in the same rack cabinet. Do not connect a power cord from a device that is installed in one rack cabinet to a power device that is installed in a different rack cabinet.**

R009

CAUTION:

Removing components from the upper positions in the Enterprise Rack cabinet improves rack stability during relocation. Follow these general guidelines whenever you relocate a populated rack cabinet within a room or building:

- **Reduce the weight of the rack cabinet by removing equipment starting at the top of the rack cabinet. When possible, restore the rack cabinet to the configuration of the rack cabinet as you received it. If this configuration is not known, you must do the following:**
  - **Remove all devices in the 32 U position and above.**
  - **Make sure that the heaviest devices are installed in the bottom of the rack cabinet.**
  - **Make sure that there are no empty U positions between devices installed in the rack cabinet below the 32 U position.**
- **If the rack cabinet that you are relocating is part of a suite of rack cabinets, detach the rack cabinet from the suite.**
- **Inspect the route that you plan to take, to eliminate potential hazards.**
- **Make sure that the route that you choose can support the weight of the loaded rack cabinet. See the documentation that comes with your rack cabinet for the weight of a loaded rack cabinet.**
- **Make sure that all door openings are at least 760 x 2030 mm (30 x 80 in.)**
- **Make sure that all devices, shelves, drawers, doors, and cables are secure.**
- **Make sure that the four leveling pads are raised to their highest positions.**
- **Make sure that no stabilizer bracket is installed on the rack cabinet.**
- **Do not use a ramp that is inclined more than 10 degrees.**
- **When the rack cabinet is in the new location, do the following:**
  - **Lower the four leveling pads.**
  - **Install stabilizer brackets on the rack cabinet.**
  - **If you removed any devices from the rack cabinet, repopulate the rack cabinet from the lowest position to the highest position.**

If a long-distance relocation is required, restore the rack cabinet to the configuration of the rack cabinet as you received it. Pack the rack cabinet in the original packaging material, or equivalent. Also, lower the leveling pads to raise the casters off the pallet and bolt the rack cabinet to the pallet.

© Copyright Lenovo 2020

Chapter 1. Introduction

See this documentation to learn about specification details and installation instructions of ThinkSystem Micro DataCenter 1200 mm Deep Rack Cabinet.

ThinkSystem Micro DataCenter 1200mm Deep Rack Cabinet is a 6U cabinet designed for Micro DataCenter servers.

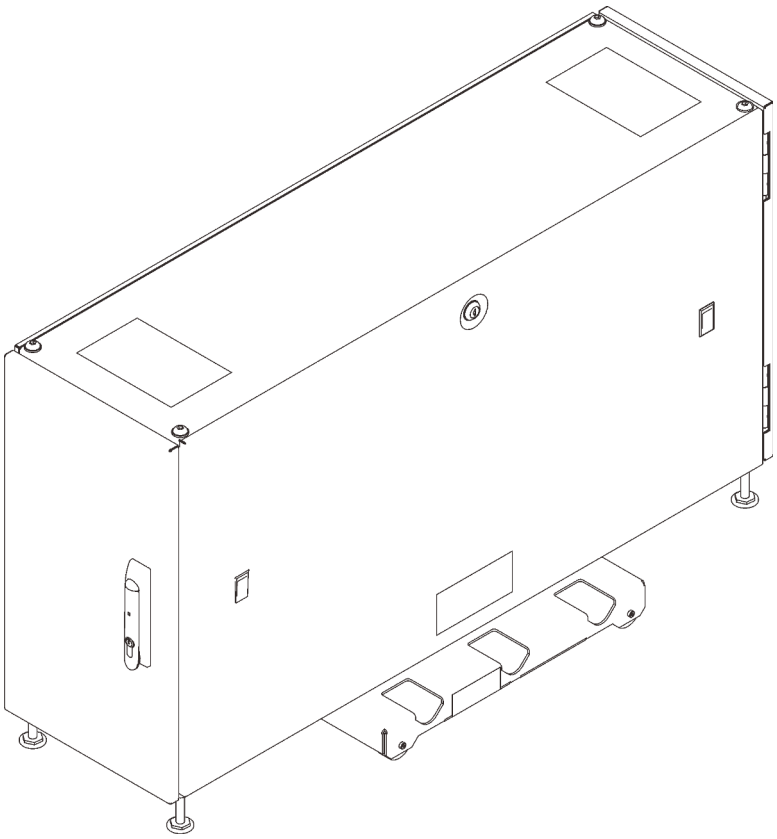

Figure 1. ThinkSystem Micro DataCenter 1200mm Deep Rack Cabinet

The cabinet comes with a limited warranty. For details about the warranty, see:
https://support.lenovo.com/us/en/solutions/ht503310

For details about your specific warranty, see:
http://datacentersupport.lenovo.com/warrantylookup

© Copyright Lenovo 2020

Chapter 2. Specifications

See this section for information about ThinkSystem Micro DataCenter 6U 1200mm Deep Rack Cabinet.

Dimension and weight

Dimension	• Length: 1200 mm (47.24 inch) • Width: – Without the wheeled tray: 345 mm (13.58 inch) – With the wheeled tray: 512.5 mm (20.18 inch) • Height: 687 mm (27.05 inch)
Weight	• Without the wheeled tray: 64.4 kg (142 lbs) • With the wheeled tray: 74 kg (163.1 lbs)

Supported servers

See this section for information about the servers that are supported by the rack cabinet.

This rack cabinet supports the following servers:

- SR250: up to four units with Toolless Friction Rail v2

  See https://thinksystem.lenovofiles.com/help/topic/7Y51/pdf_files.html for more information.
- SE350 E1 Enclosure (1U 2-node): up to four units of E1 enclosures with Toolless Friction Rail v2

  See https://thinksystem.lenovofiles.com/help/topic/SE350/pdf_files.html for more information.

  Note: This rack cabinet does not support SE350 E2 Enclosure (2U 2-node). See https://thinksystem.lenovofiles.com/help/topic/SE350/server_specifications.html for details about SE350 configurations.
- SR670: up to two units with vertical mounting kit

© Copyright Lenovo 2020

Chapter 3. Parts Listing

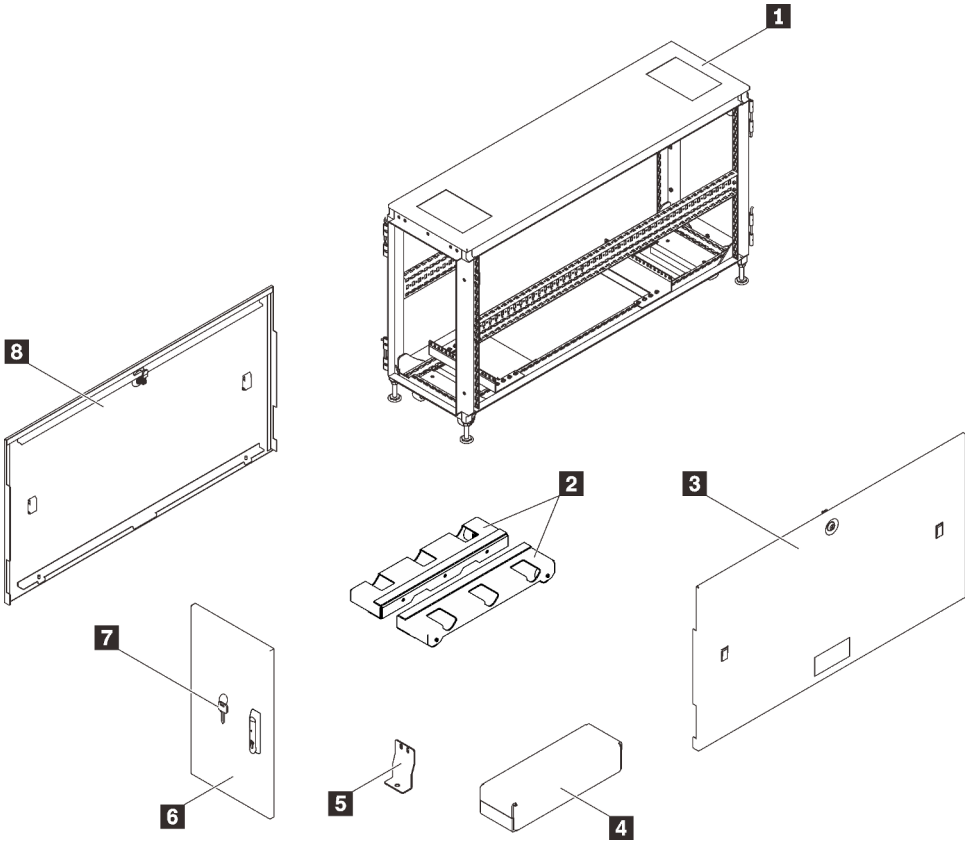

Figure 2. Rack cabinet components

Table 1. Rack cabinet components

1 Rack cabinet frame	5 Shipping bracket
2 Wheeled trays	6 Removable and reversible door
3 Removable side panel	7 Key
4 Hardware box (see “Hardware box” on page 5)	8 Removable side panel

Hardware box

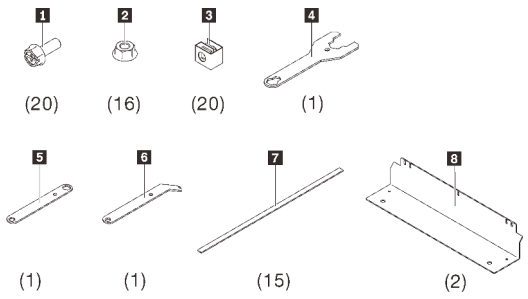

Figure 3. Components in the hardware box

© Copyright Lenovo 2020

Table 2. Components in the hardware box

1 20 M6 screws	5 One socket wrench
2 16 flange nuts	6 One spud socket wrench
3 20 G-type cage nuts	7 15 cable ties
4 One combination wrench	8 Two bolt-down brackets

Chapter 4. Moving the rack cabinet

S037

CAUTION:
The weight of this part or unit is more than 55 kg (121.2 lb). It takes specially trained persons, a lifting device, or both to safely lift this part or unit.

Attention - Tip hazard.

Important:

- The task in this section requires more than two people.
- The cabinet could be easily tipped. Move it with extreme caution.

WARNING: Failure to follow these instructions could result in equipment damage, severe injuries, or death.

Before moving the rack cabinet, complete the following steps:

1. Unlock and open both doors by pulling up the handle and turning it clockwise.

© Copyright Lenovo 2020

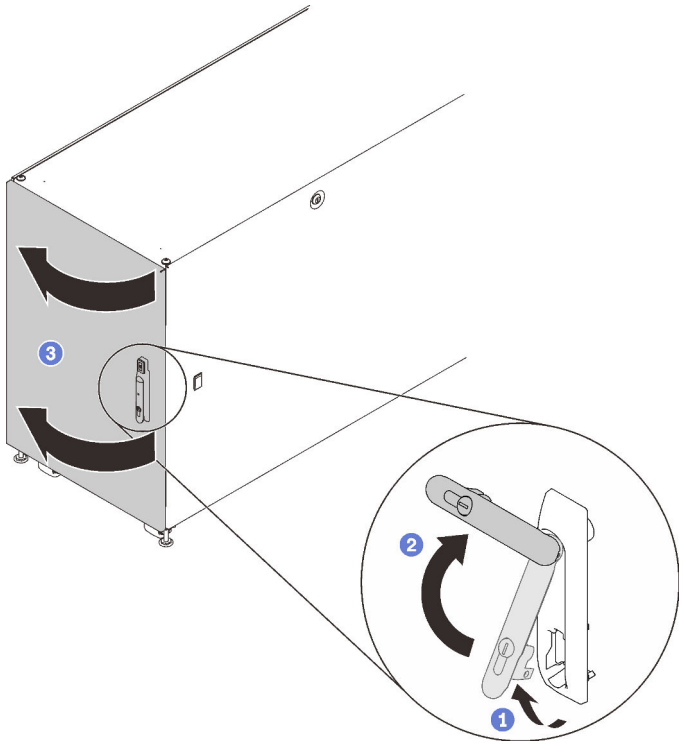

Figure 4. Opening the door

2. Remove the four shipping brackets that secure the cabinet to the pallet.

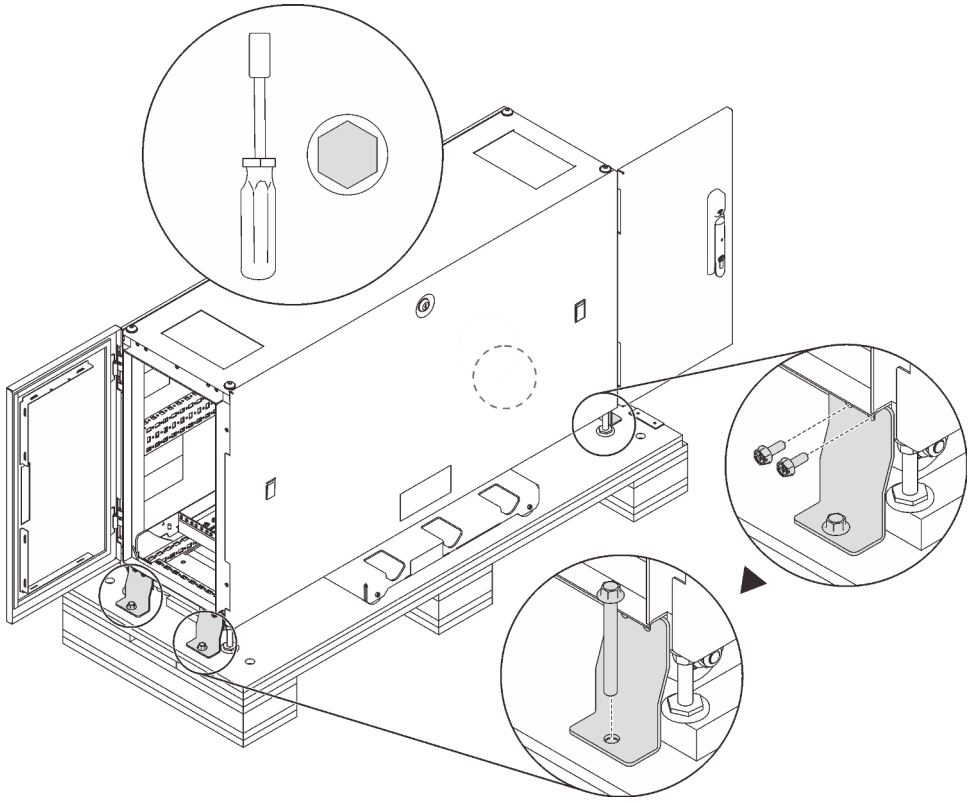

Figure 5. Removing shipping brackets

Two options are available when moving the cabinet:

Casters

S037

CAUTION:
The weight of this part or unit is more than 55 kg (121.2 lb). It takes specially trained persons, a lifting device, or both to safely lift this part or unit.

Complete the following steps to move the cabinet to the designated site:

Step 1. Make sure the leveling feet are all up. If not, complete the following procedure on each of the leveling feet.

a. Loosen the nut that fixes the leveling foot.

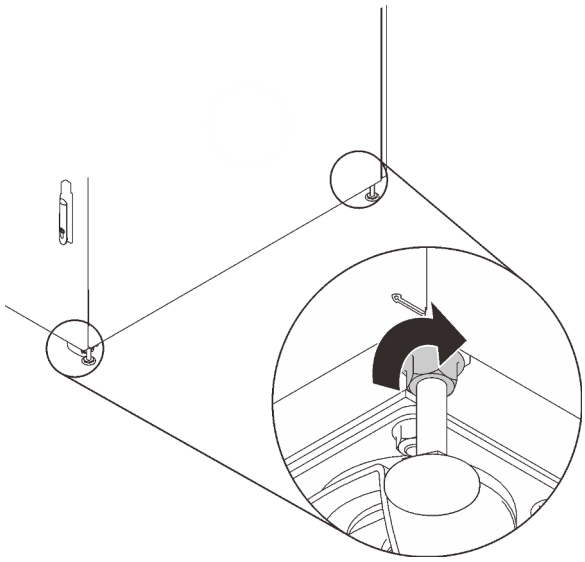

Figure 6. Loosening the nut

b. Insert the open end of the combination wrench in the hardware box (see 4 in “Hardware box” on page 5) into the screw above the leveling foot, and turn it counterclockwise until it no longer makes contact with the floor.

Note: Make sure to shorten the cabinet feet enough to allow the cabinet to slide on the ramp without getting stuck.

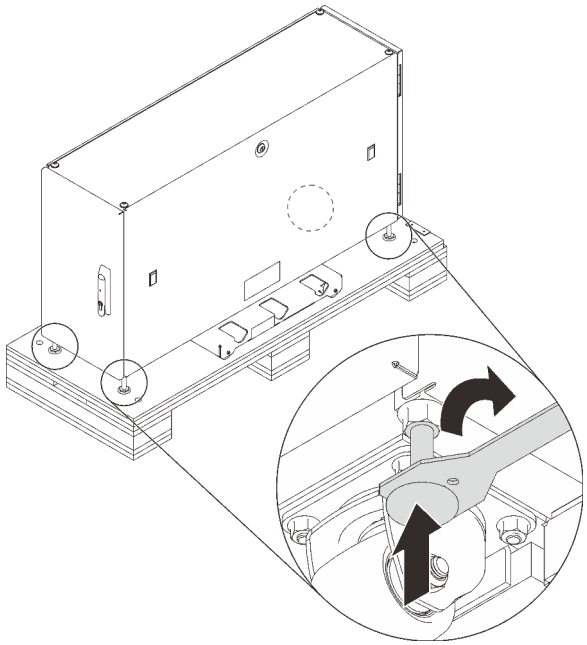

Figure 7. Adjusting the rack cabinet feet

Step 2. Make sure the ramp board is lowered and balanced, and then push the cabinet from the rear until it reaches the designated site.

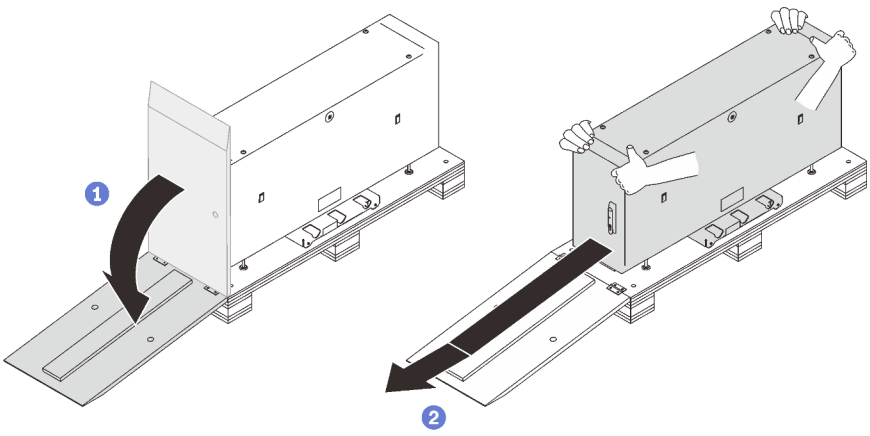

Figure 8. Sliding the cabinet down from the pallet

Notes:

- Make sure that more than two people are handling the cabinet while sliding it down from the ramp board.
- Do not stand in the path of the cabinet.

Crane lifter

Attention - Drop hazard.

Complete the following steps to lift and move the cabinet to the designated site:

Step 1. Remove the four plugs from the four corners on the top of the cabinet frame.

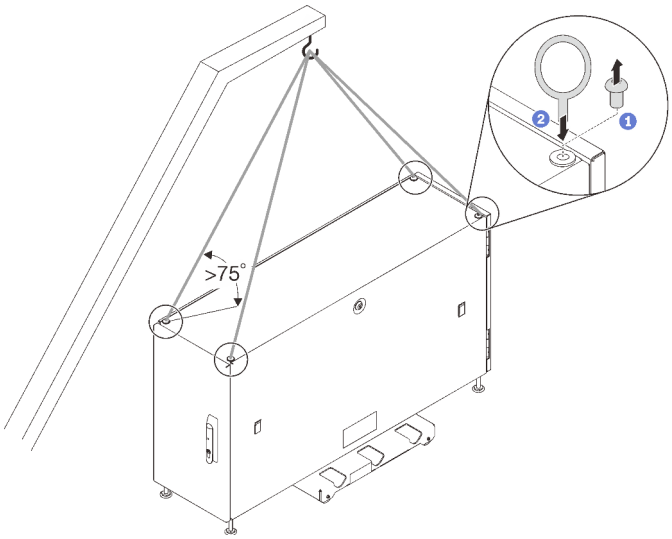

Figure 9. Lifting the rack cabinet

Step 2. Install one M12 eye bolt to each hole, and make sure they stay solidly connected to the cabinet.

Step 3. Connect the four eye bolts to the hook of a crane lifter, and make sure the cord length allows an angle more than 75°.

Step 4. Lift the cabinet and place it to the designated site.

After moving the cabinet to the designated site, complete the following steps:

1. Make sure the leveling feet are down and make firm contact to the ground. If not, complete the following procedure on each of the leveling feet.
   a. Loosen the nut that fixes the leveling foot if necessary.

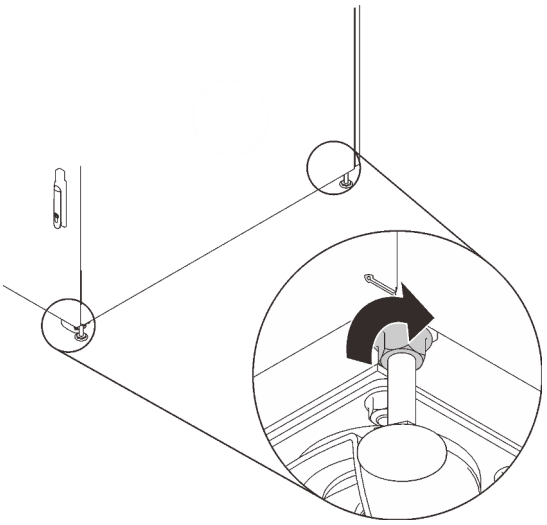

Figure 10. Loosening the nut

b. Insert the open end of the combination wrench in the hardware box (see 4 in "Hardware box" on page 5) into the hexagonal head of the foot, and turn it clockwise until the foot makes firm contact with the floor.

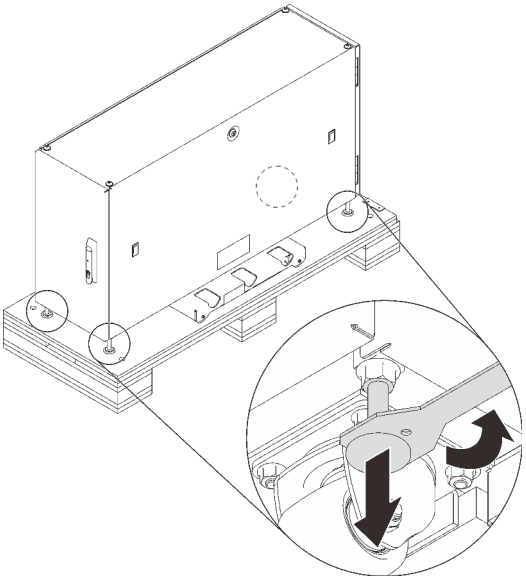

Figure 11. Adjusting the rack cabinet foot

c. Once the leveling foot makes firm contact with the floor, tighten the nut that fixes it.

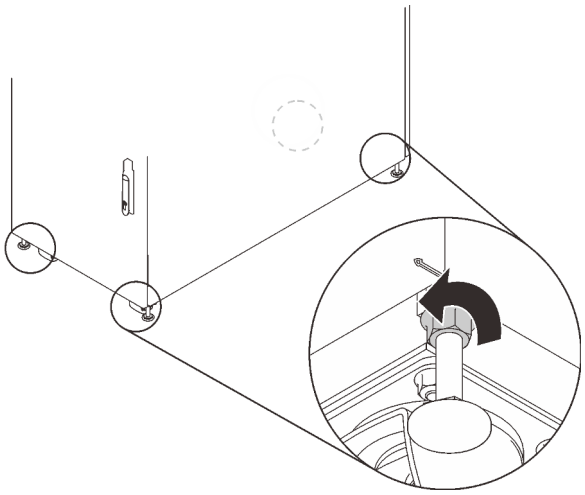

Figure 12. Tightening the nut

2. To secure the cabinet to the ground, you can install the bolt-down brackets that is included in the hardware box (see 8 in “Hardware box” on page 5).

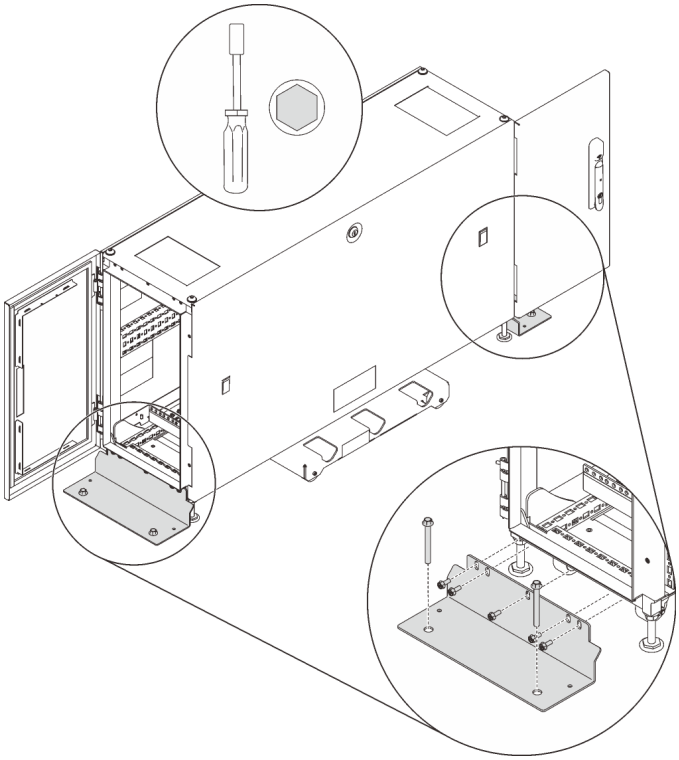

Figure 13. Installing the bolt-down brackets

Chapter 5. Managing cables

See this section to learn how to manage cables for the rack cabinet.

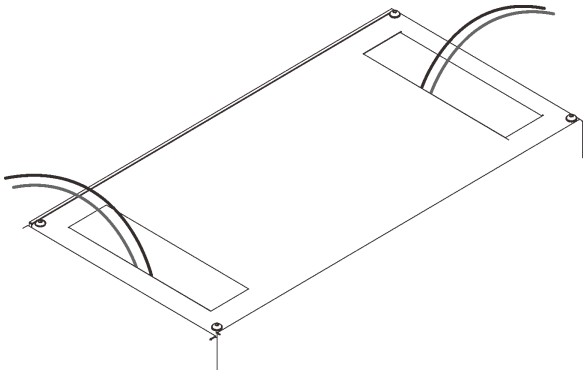

Figure 14. Managing cables

Route the cables that are connected to the servers out of the cabinet from the roof holes as illustrated. If necessary, secure the cables with the straps that come in the hardware bag.

Grounding cable

See this section to learn how to connect ground cable in the rack cabinet.

The following grounding pins close to door frame bottom are available for grounding cable connection.

Grounding cable from the cabinet frame

This cable is required for grounding.

© Copyright Lenovo 2020

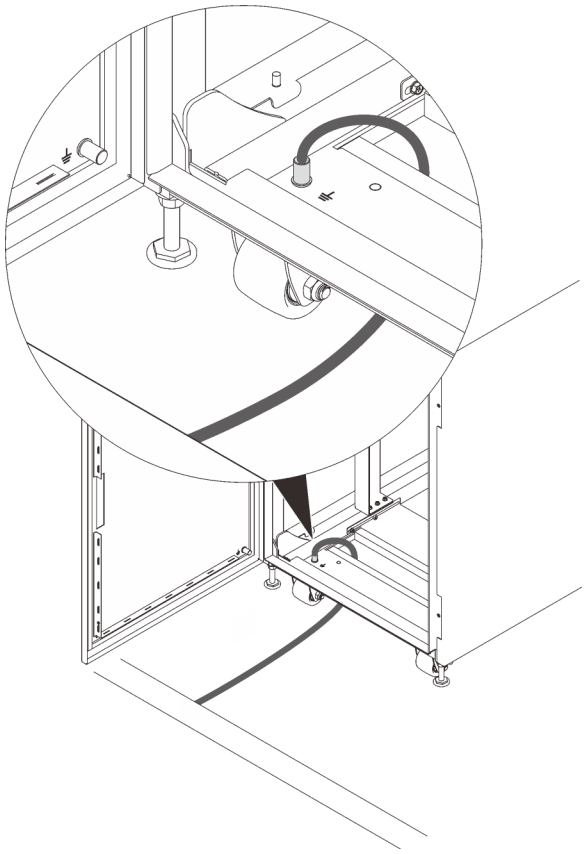

Figure 15. Grounding cable from the cabinet frame

Grounding cable from the cabinet door

This is an optional grounding cable.

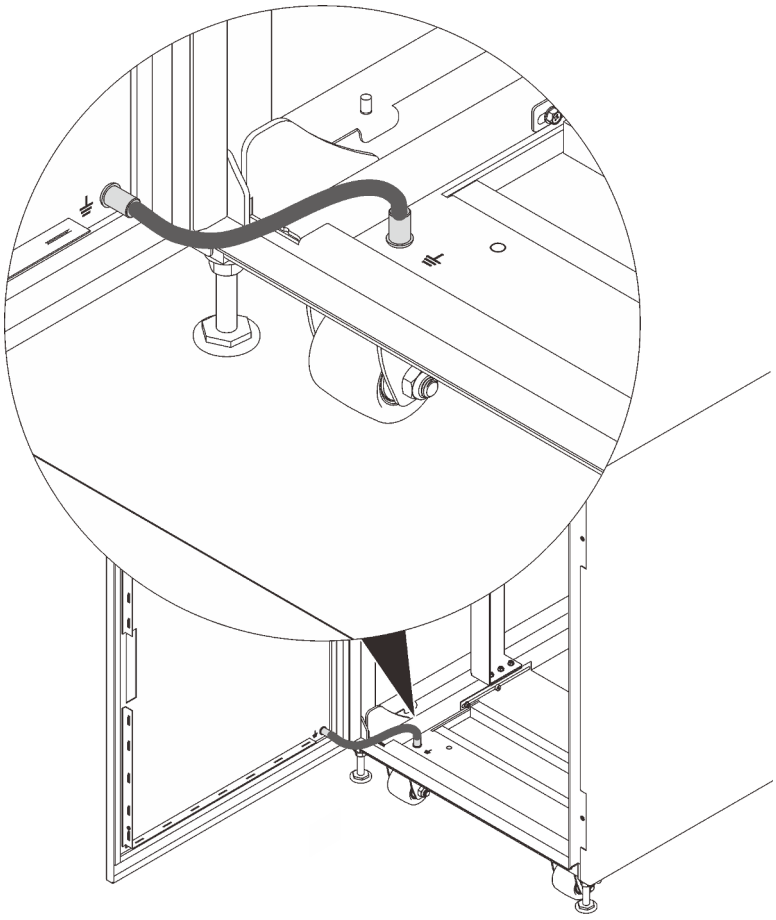

Figure 16. Grounding cable from the cabinet door

Grounding cable from the side panel

This is an optional grounding cable.

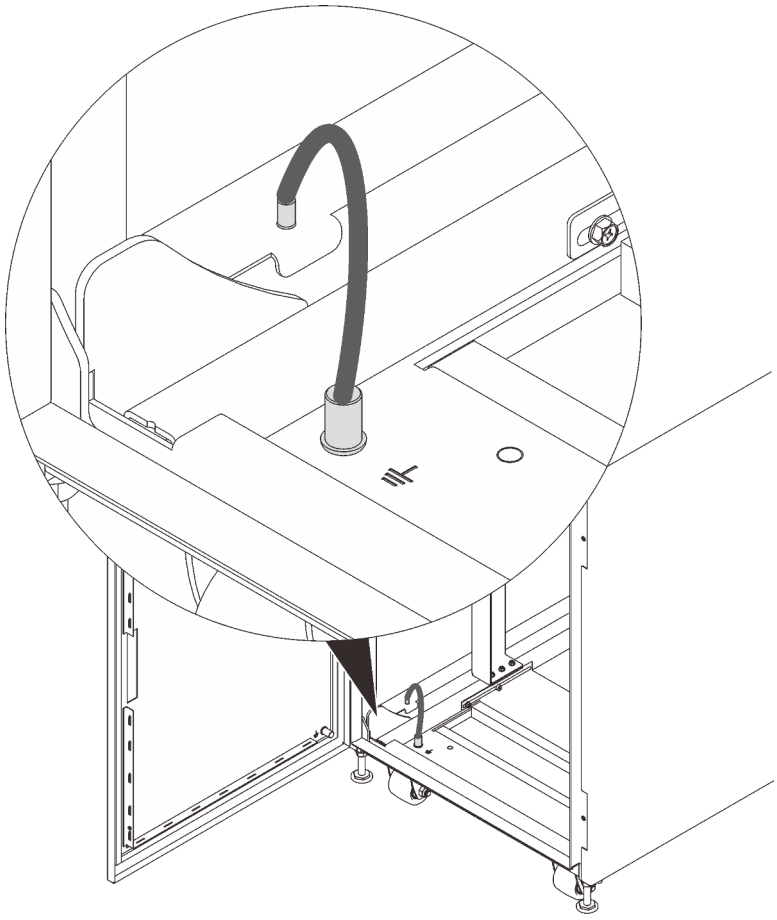

Figure 17. Grounding cable from the side panel

Chapter 6. Installing optional kits

See this section to learn how to install optional kits for ThinkSystem Micro DataCenter 6U 1200mm Deep Rack Cabinet.

Installing the rail kits

Follow the instructions in this section to install or remove the rail kits and servers.

This cabinet supports the following servers and corresponding rail kits. Follow the instructions to install them into the cabinet.

- "Install the rail kit and SE350 E1 Enclosure (1U2N)" on page 19
- "Install the rail kit and SR250" on page 25
- "Install the rail kit and SR670" on page 30

Install the rail kit and SE350 E1 Enclosure (1U2N)

About this task

See the following table to identify the components that come with the rail kit.

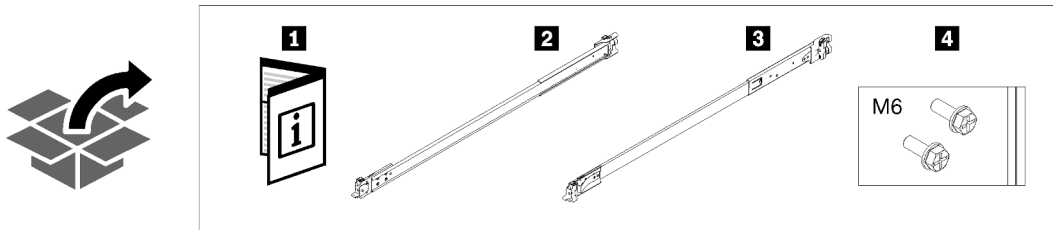

1 Document	3 Right rail
2 Left rail	4 Two M6 screws

The cabinet supports up to **four** units of rail kit and SE350 E1 Enclosure and corresponding rail kit. For optimal use of space, it is advised to determine the location to install the rail kits based on the number of units that are installed.

- One unit: 3U
- Two units: 3U and 4U
- Three units: 3U, 4U, and 5U
- Four units: 3U, 4U, 5U, and 6U

Note: When installed vertically into this cabinet, the server can be installed with server top facing either right or left. In this section, however, it is illustrated with the top of server facing right as an example.

Procedure

Step 1. Remove the inner rails.

© Copyright Lenovo 2020

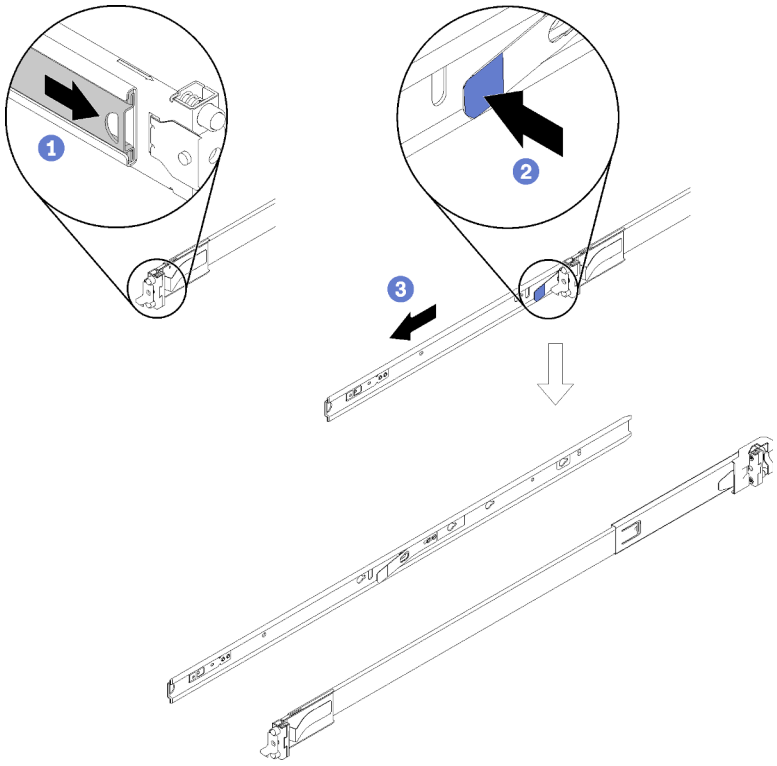

Figure 18. Removing the inner rails

① Pull the inner rail outward until the release latch becomes visible.

② Press on the release latch.

③ Remove the inner rail from the outer rail.

Step 2. Install the inner rails to the enclosure.

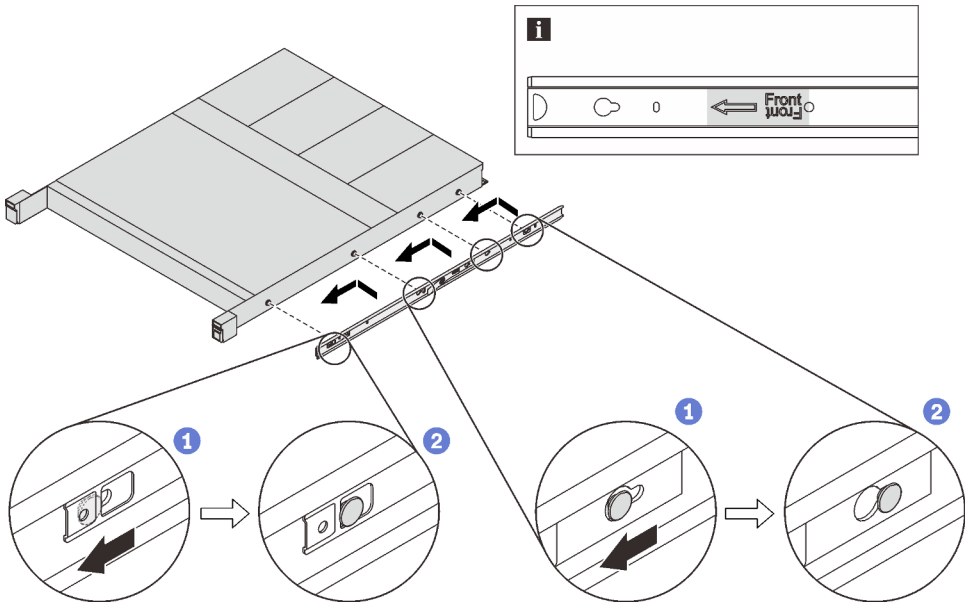

Figure 19. Installing the inner rails to the enclosure

① Align the mounting holes in the inner rail with the corresponding rail mounting pins on the side of the enclosure.

② Push the inner rail as shown until the mounting pins on the enclosure lock into place with the inner rail.

Note: Make sure the stamp “Front” always faces toward the front when assembling the inner rail to the enclosure.

Step 3. Repeat the previous step on the other inner rail.

Step 4. Install the rear mounting bracket of the right outer rail to the lower EIA flange.

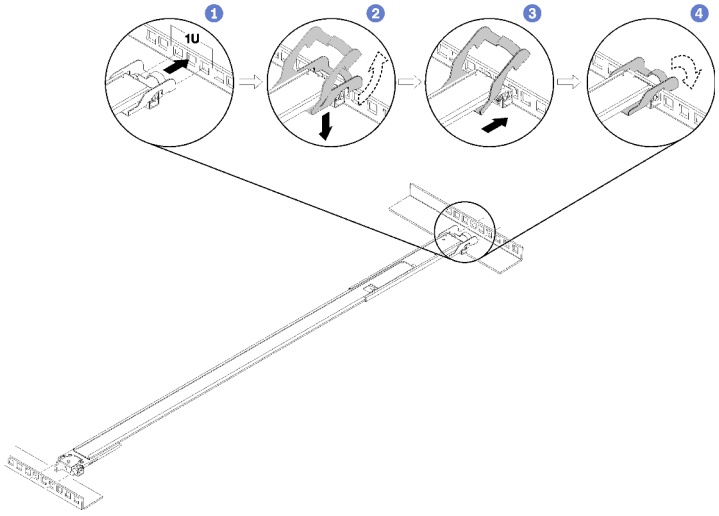

Figure 20. Installing the rear mounting bracket to the EIA flange

① Align the rear pins on the outer rails to the EIA flange.

② Slightly push the end of the rail down to hook the rear mounting bracket latch to the rack.

③ Push the rail into the EIA flange until the pins protrude through into the corresponding holes in the rack.

④ The bracket will lock into place as illustrated.

Step 5. Install the front mounting bracket of the right outer rail to the lower mounting flange.

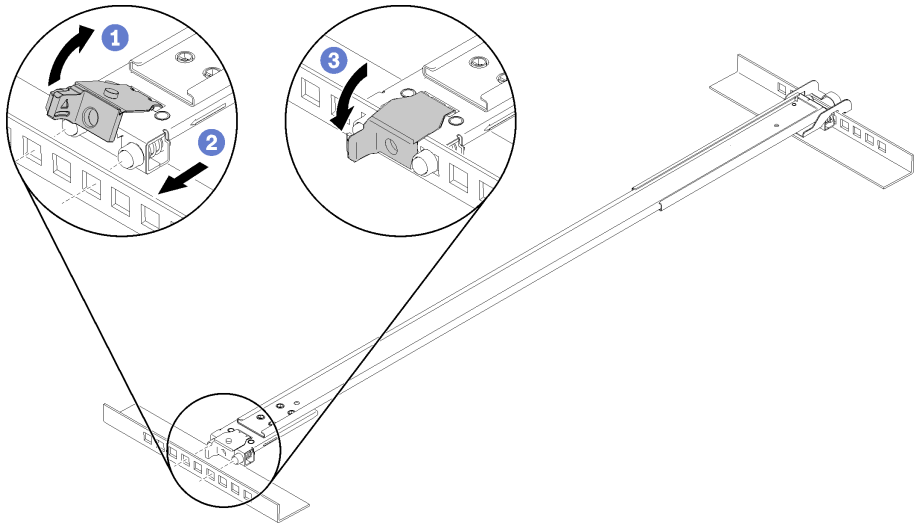

Figure 21. Installing the front mounting bracket to the EIA flange

Note: Make sure the rail stays horizontal.

① Open the front bracket and align the front end of the outer rail to the EIA flange.

② Pull the outer rail into the EIA flange until the pins are inserted into the corresponding holes.

③ Close the front bracket to secure the rail.

Step 6. Repeat the previous two steps to install the left outer rail to the upper EIA flange.

Step 7. (Optional) If you need to ship the rack cabinet with the enclosures installed or place the rack cabinet in a vibration-prone area, install two M6 screws into the mounting flanges between the two rear pins on both sides.

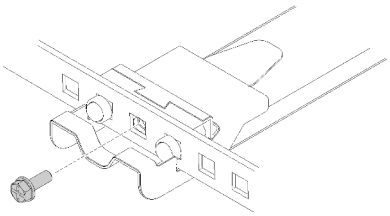

Figure 22. Installing the rear screws

Step 8. Rotate the E1 enclosure clockwise so that the right side is facing down. Have one person hold on the front side, while the other hold on the rear side.

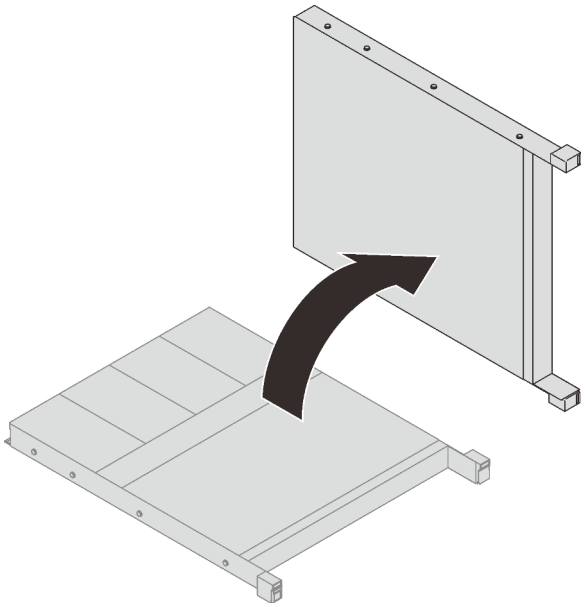

Figure 23. Rotating SE350 E1 Enclosure

Step 9. Install the E1 Enclosure into the rack.

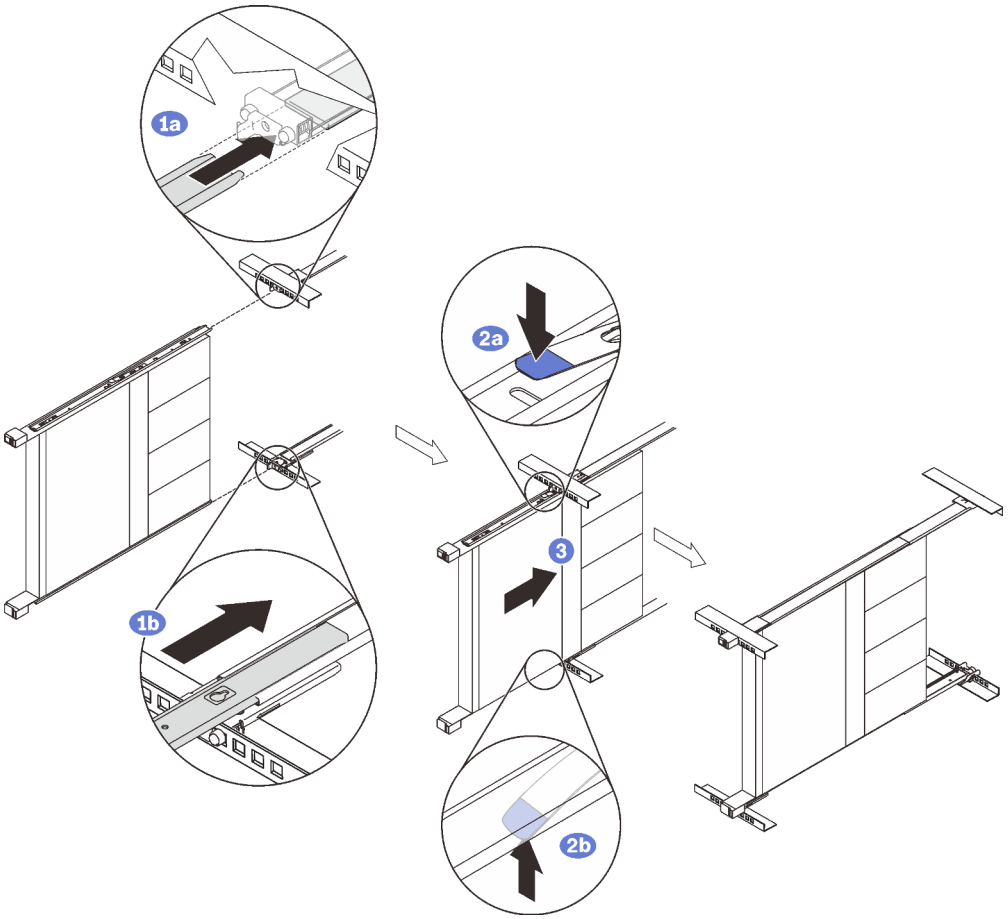

Figure 24. Slide the E1 Enclosure into the rails in the rack.

Note: Make sure the top of the enclosure is facing right.

① Have the person on the front side support the weight, while the other person on the rear side align the enclosure to the slide rails. Position the enclosure as shown, and slide it into the rack.

② Press the release latches.

③ Push the enclosure all the way into the rack until it clicks into locked position.

Step 10. (Optional) Open the rack release latches and tighten the screws to firmly secure the rail before moving or placing the rack cabinet in a vibration-prone area.

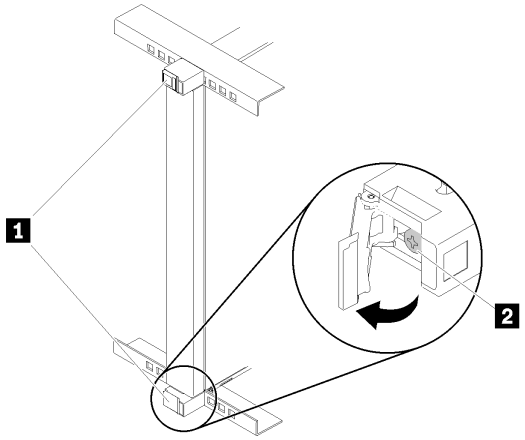

Figure 25. Securing the enclosure

1 Rack release latches	2 Front screw

Remove SE350 E1 enclosure from the rack

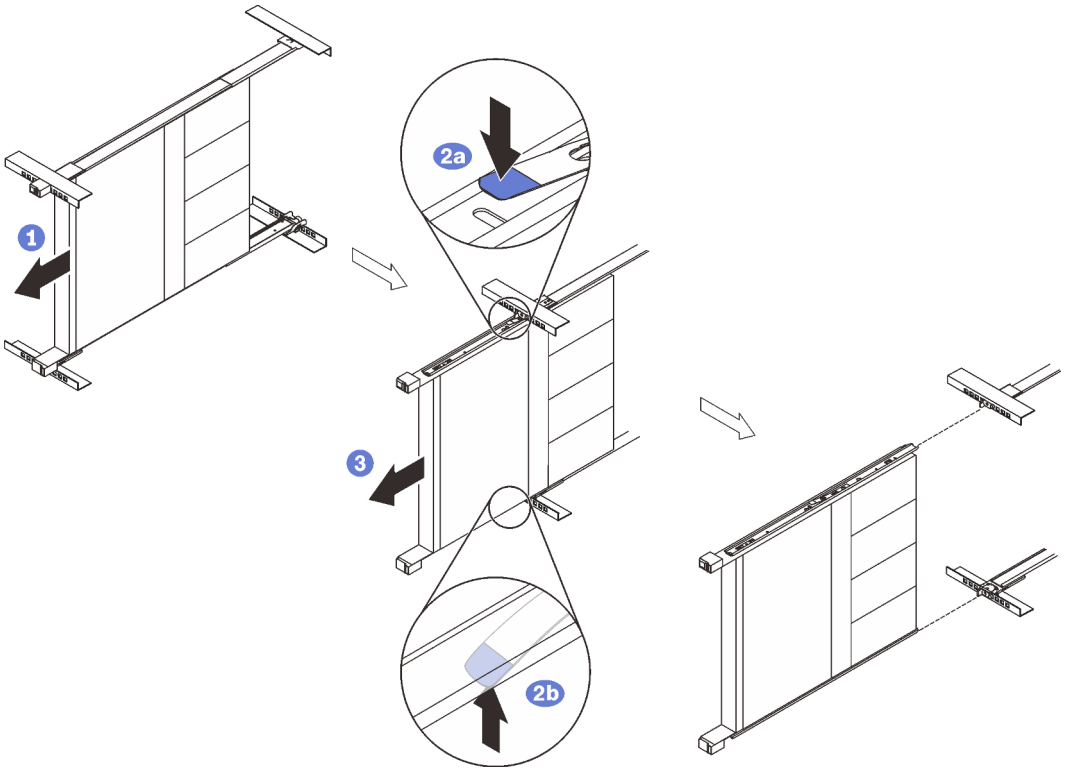

Figure 26. Removing SE350 E1 enclosure

① Disconnect all the cables that are connected to the enclosure, and slide the enclosure out until it stops.

② Press the release latches to disengage the inner rails.

③ Have one person hold the front end of the enclosure, while the other person removes the enclosure.

Install the rail kit and SR250

About this task

See the following table to identify the components that come with the rail kit.

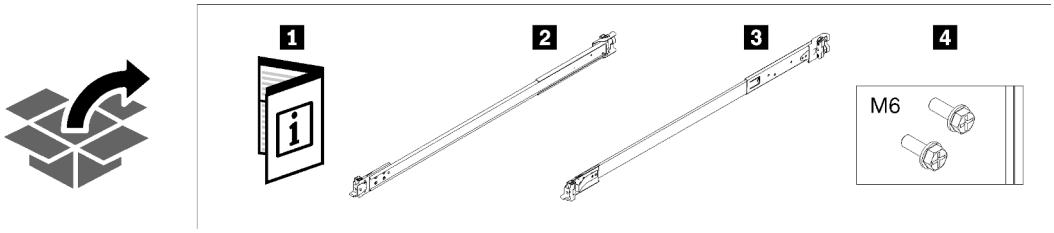

1 Document	3 Right rail
2 Left rail	4 Two M6 screws

The cabinet supports up to **four** units of rail kit and SE350 E1 Enclosure and corresponding rail kit. For optimal use of space, it is advised to determine the location to install the rail kits based on the number of units that are installed.

- One unit: 3U

- Two units: 3U and 4U
- Three units: 3U, 4U, and 5U
- Four units: 3U, 4U, 5U, and 6U

The cabinet supports up to **four** units of SR250 and corresponding rail kit. For optimal use of space, it is advised to determine the location to install the rail kits based on the number of units that are installed.

- One unit: 3U
- Two units: 3U and 4U
- Three units: 3U, 4U, and 5U
- Four units: 3U, 4U, 5U, and 6U

Note: When installed vertically into this cabinet, the server can be installed with server top facing either right or left. In this section, however, it is illustrated with the top of server facing left as an example.

Procedure

Step 1. Remove the inner rails.

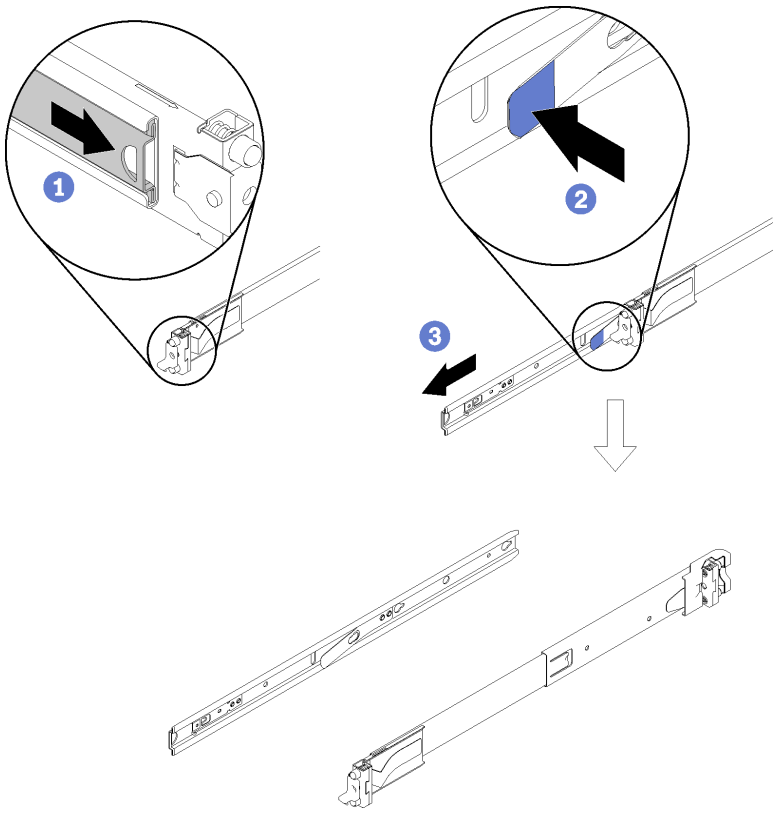

Figure 27. Removing the inner rails

① Pull the inner rail outward until the release latch becomes visible.
② Press on the release latch.
③ Remove the inner rail from the outer rail.

Step 2. Install the inner rails to the server.

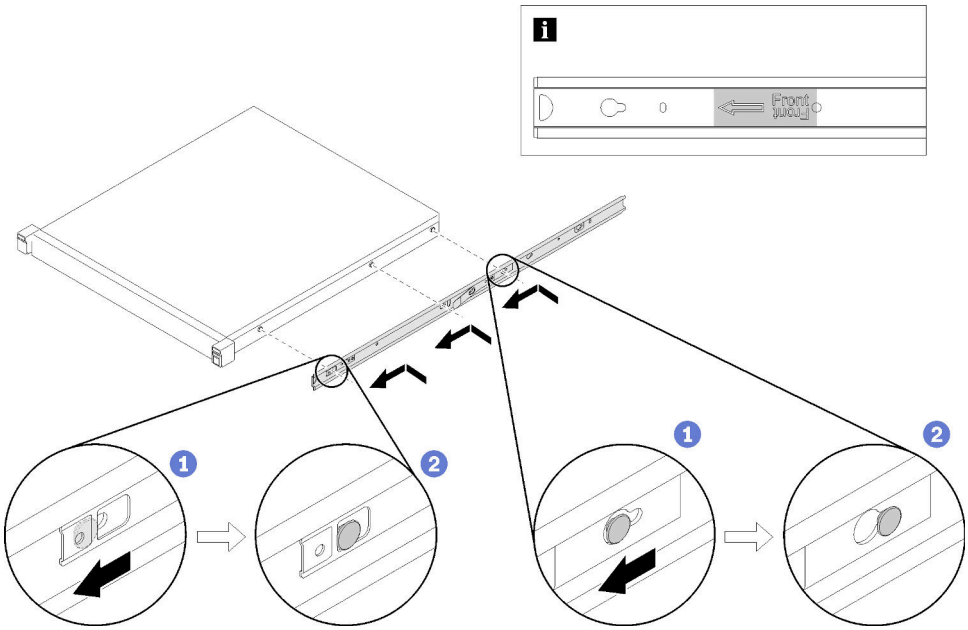

Figure 28. Installing the inner rails to the enclosure

① Align the mounting holes in the inner rail with the corresponding rail mounting pins on the side of the server.

② Push the inner rail as shown until the mounting pins on the server lock into place with the inner rail.

Note: Make sure the stamp “Front” always faces toward the front when assembling the inner rail to the server.

Step 3. Rotate the server counter-clockwise so that the left side is facing down.

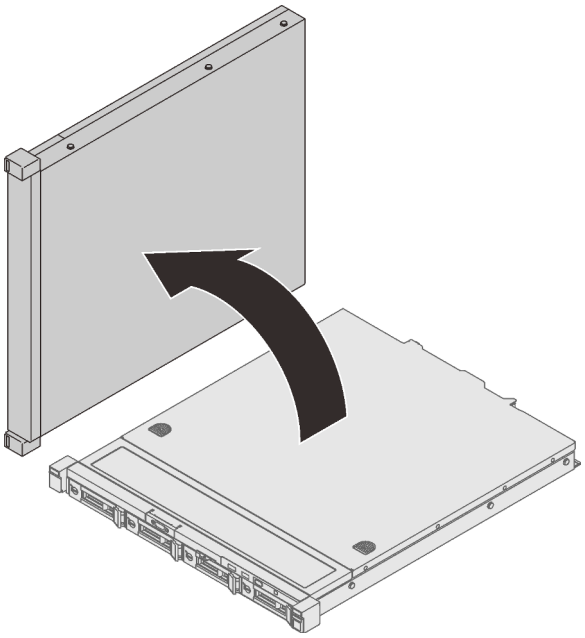

Figure 29. Rotating SR250

Step 4. Install the rear mounting bracket of the right outer rail to the lower EIA flange.

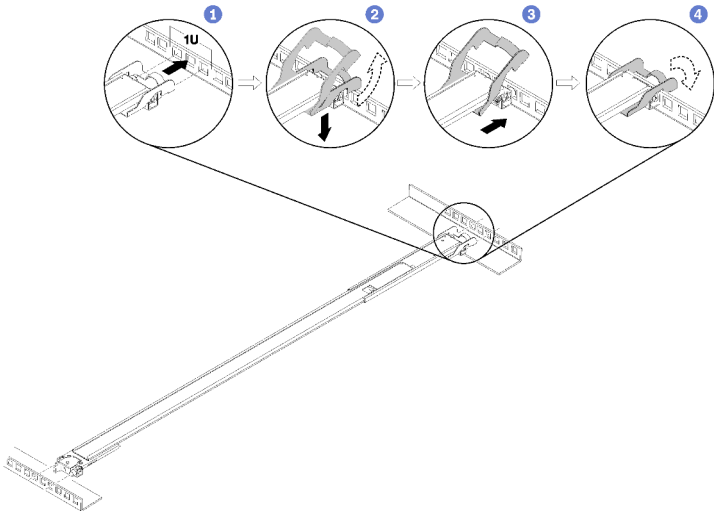

Figure 30. Installing the rear mounting bracket to the EIA flange

① Align the rear pins on the outer rails to the EIA flange.

② Slightly push the end of the rail down to hook the rear mounting bracket latch to the rack.

③ Push the rail into the EIA flange until the pins protrude through into the corresponding holes in the rack.

④ The bracket will lock into place as illustrated.

Step 5. Install the front mounting bracket of the right outer rail to the lower mounting flange.

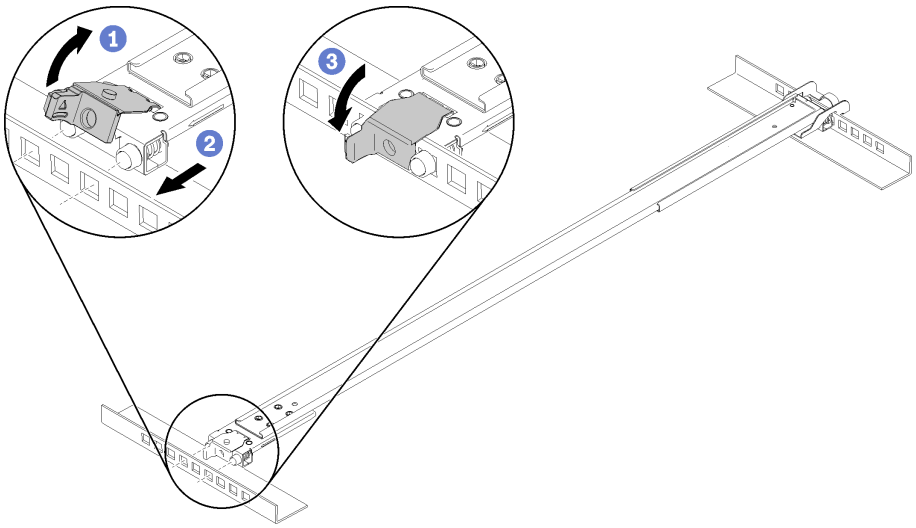

Figure 31. Installing the front mounting bracket to the EIA flange

Note: Make sure the rail stays horizontal.

① Open the front bracket and align the front end of the outer rail to the EIA flange.

② Pull the outer rail into the EIA flange until the pins are inserted into the corresponding holes.

③ Close the front bracket to secure the rail.

Step 6. Repeat the previous two steps to install the left outer rail to the upper EIA flange.

Step 7. (Optional) If you need to ship the rack cabinet with servers installed or place the rack cabinet in a vibration-prone area, install two M6 screws into the mounting flanges between the two rear pins on both sides.

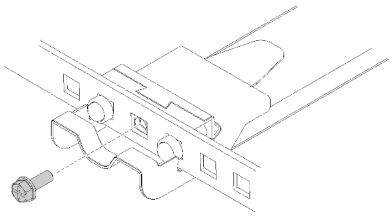

Figure 32. Installing the rear screws

Step 8. Slide the SR250 into the rack:

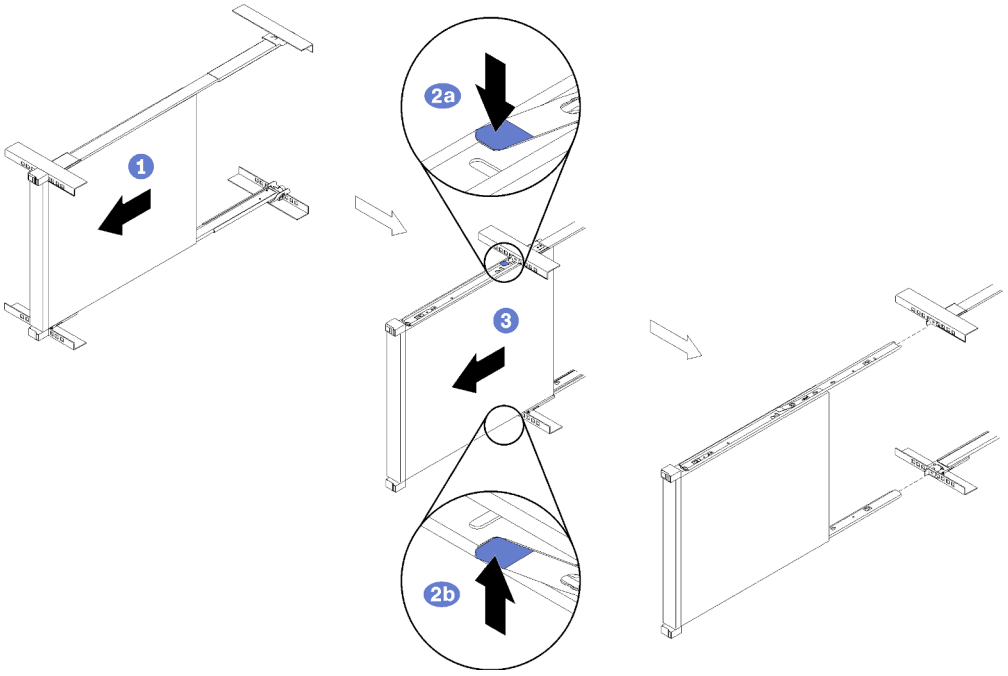

Figure 33. Slide the SR250 into the rack.

Note: Make sure the top of the enclosure is facing right.

① Lift and align the server to the slide rails. Position the enclosure as shown, and slide it into the rack.

② Press the release latches.

③ Push the enclosure all the way into the rack until it clicks into locked position.

Step 9. (Optional) Open the rack release latches and tighten the screws to firmly secure the rail before moving or placing the rack cabinet in a vibration-prone area.

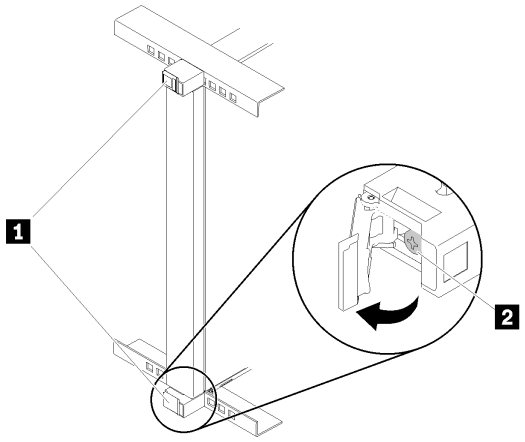

Figure 34. Securing the server

1 Rack release latches	2 Front screw

Remove the server from the rack

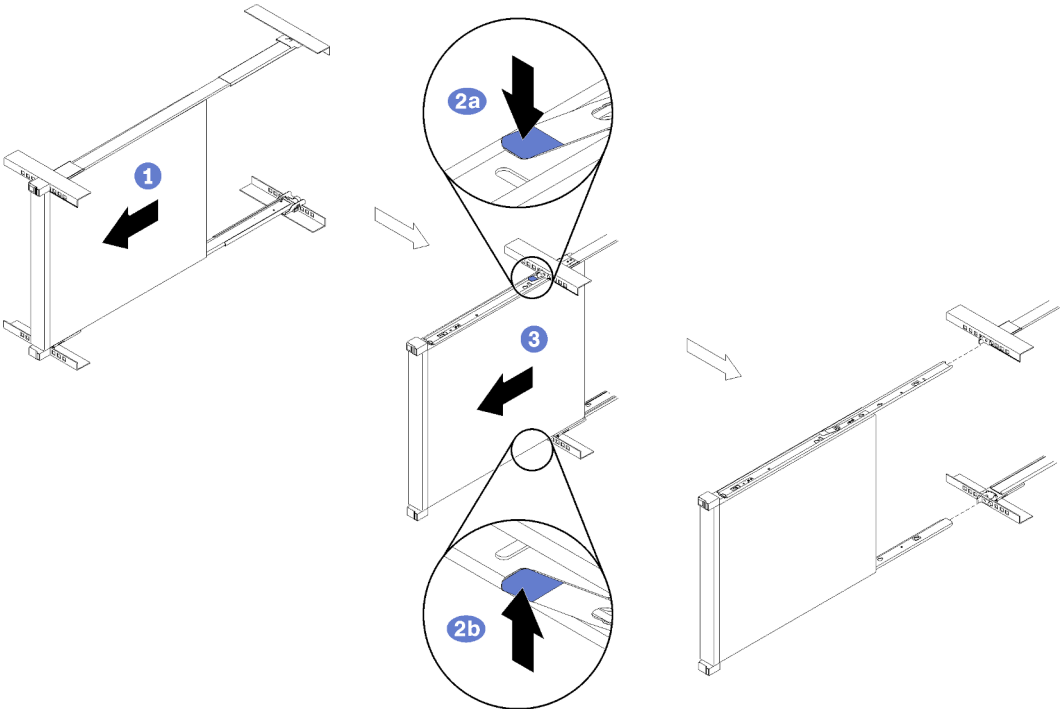

Figure 35. Removing SR250

① Disconnect all the cables that are connected to the server, and slide the server out until it stops.

② Press the release latches to disengage the inner rails.

③ Remove the server.

Install the rail kit and SR670

About this task

The cabinet supports up to **two** units of SR670 and corresponding rail kit. For optimal use of space, it is advised to determine the location to install the rail kits based on the number of units that are installed.

- One unit: 1-3U
- Two units: 1-3U and 4-6U

Notes:

- The left and right mounting glides are part of the fire enclosure. Therefore, ensure the glides are installed before attempting to mount the server in vertical orientation.
- Two people are required for this task.
- When installing SR670 in the rack cabinet, do not mix it with SE350 or SR250 in the same cabinet.

See the following table to identify the components that come with the mounting kit.

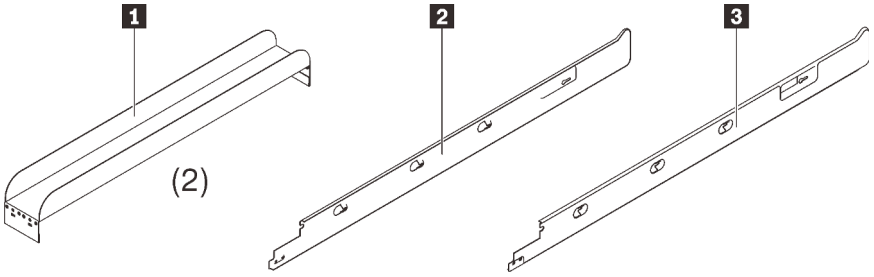

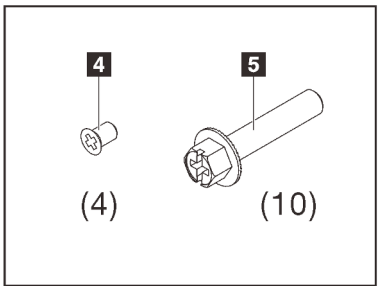

1 Two C-channels	4 Four black M3.5 x 5 mm flat head screws with pre-applied threadlocking adhesive
2 One left mounting glide	5 Ten black M5 x 20 mm combination head screws
3 One right mounting glide	

Procedure

Step 1. Remove the two screws that secure the lower portion of SR670 rack mounting brackets on both sides, and dispose the screws.

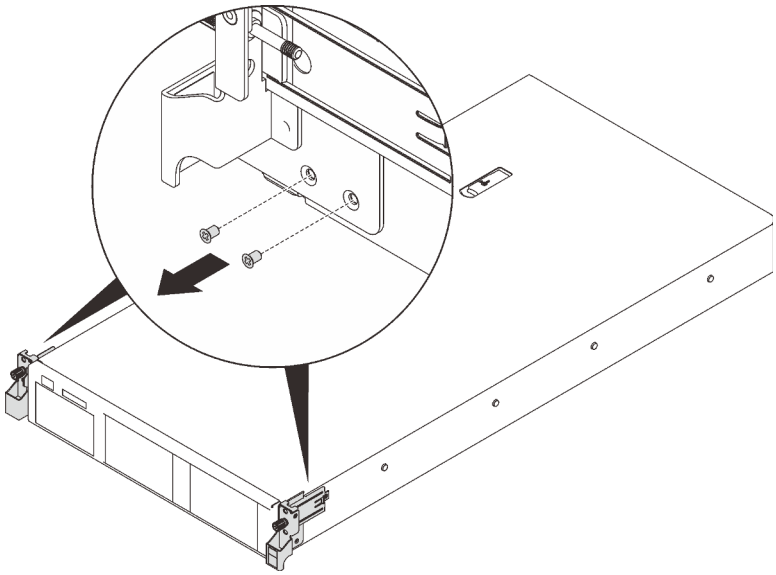

Figure 36. Removing screws from the rack mounting brackets

Note: Do not fully remove the rack mounting brackets as they are required to secure the server into the vertical rack.

Step 2. Secure the mounting glides to the server.

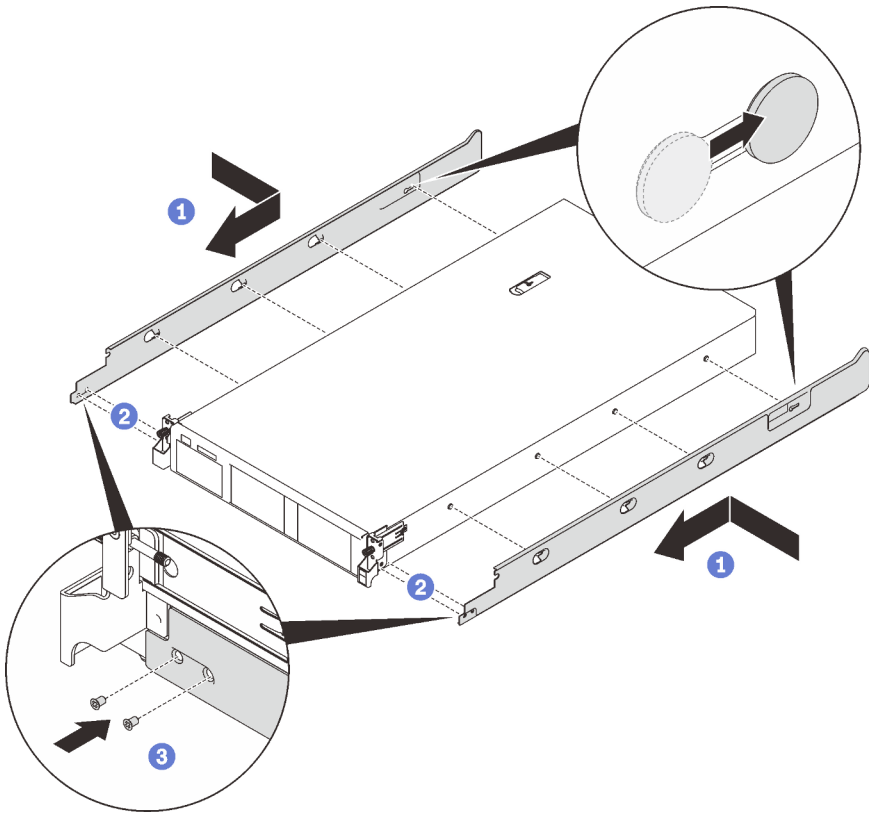

Figure 37. Securing the mounting glides

① Align the key hole slots in the glides to the T-head pins on both sides of the server, and slide the mounting glides forward until the pins are secured in the slots.

② Align the two holes on the mounting glide to the threaded standoffs on the front end of the server.

③ Secure each mounting glide with two of the M3.5 x 5 mm screws with pre-applied adhesive that come with the vertical mounting kit.

Step 3. Install one C-channel in the lower portion of the rack cabinet.

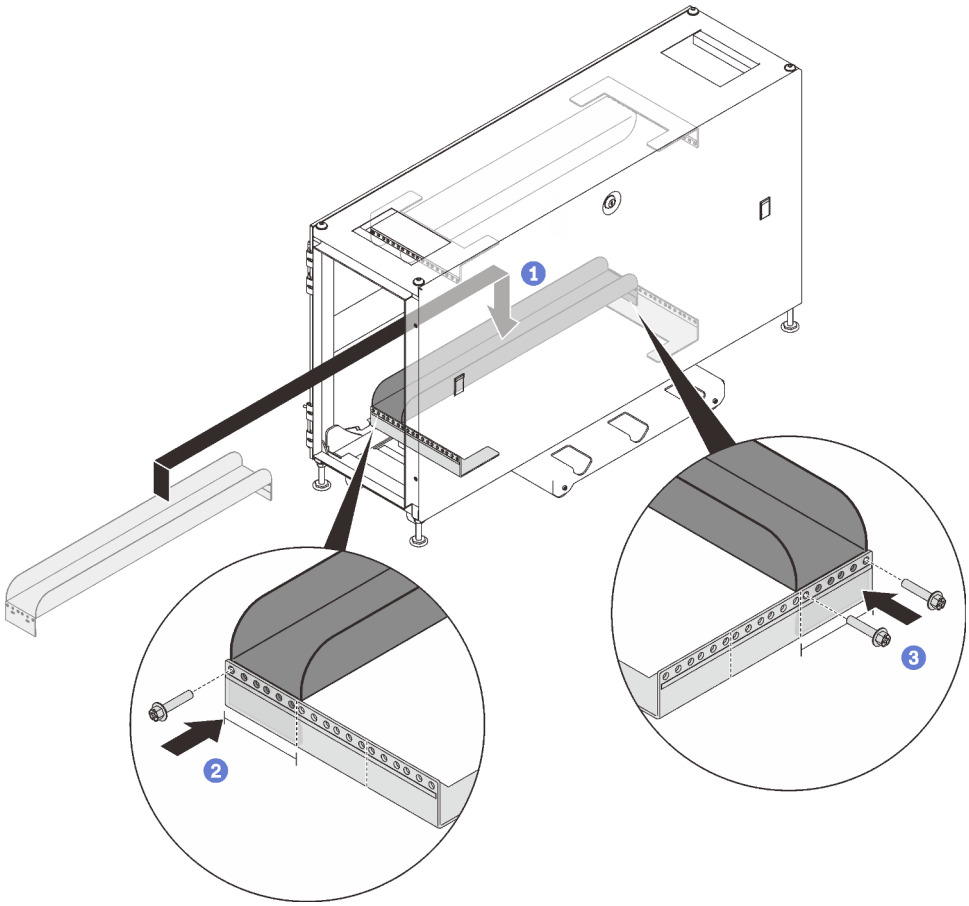

Figure 38. Installing the lower C-channel

① Align the C-channel between the lower rack EIA flanges.

② Secure the front end of the C-channel to the front EIA flange with **one** M5 x 20 mm screw through the left most hole in the channel.

③ Secure the rear end of the C-channel to the rear EIA flange with **two** M5 x 20 mm screws through the right and left most holes in the bracket.

Attention: Do NOT over-tighten the screws as the rack EIA flange could be deformed.

Step 4. Install the other C-channel in the upper portion of the rack cabinet.

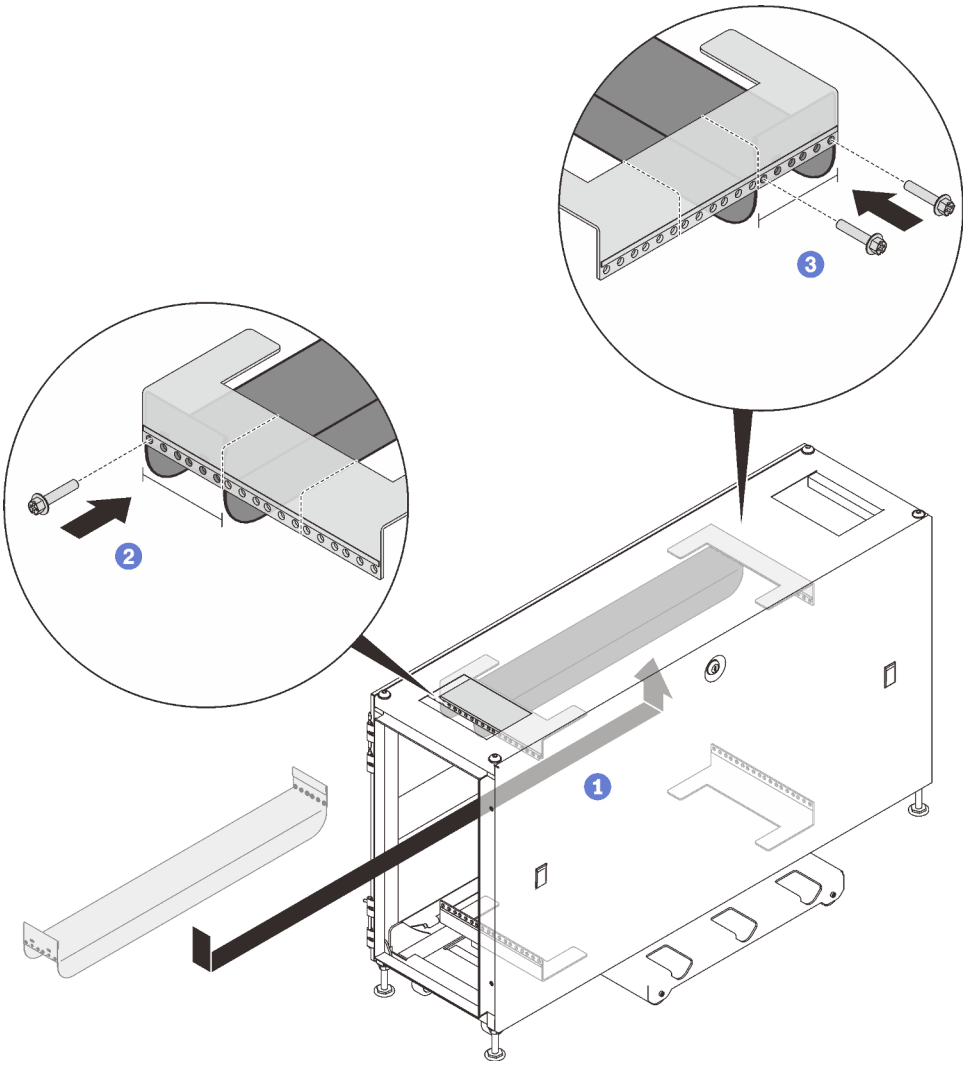

Figure 39. Installing the upper C-channel

① Have one person hold and align the C-channel between the upper rack EIA flanges.

② Secure the front end of the C-channel to the front EIA flange with **one** M5 x 20 mm screw through the left most hole in the channel.

③ Secure the rear end of the C-channel to the rear EIA flange with **two** M5 x 20 mm screws through the right and left most holes in the bracket.

Do NOT over-tighten the screws as the rack EIA flange could be deformed.

Step 5. Rotate the server 90 degree clockwise so that the right side is facing down.

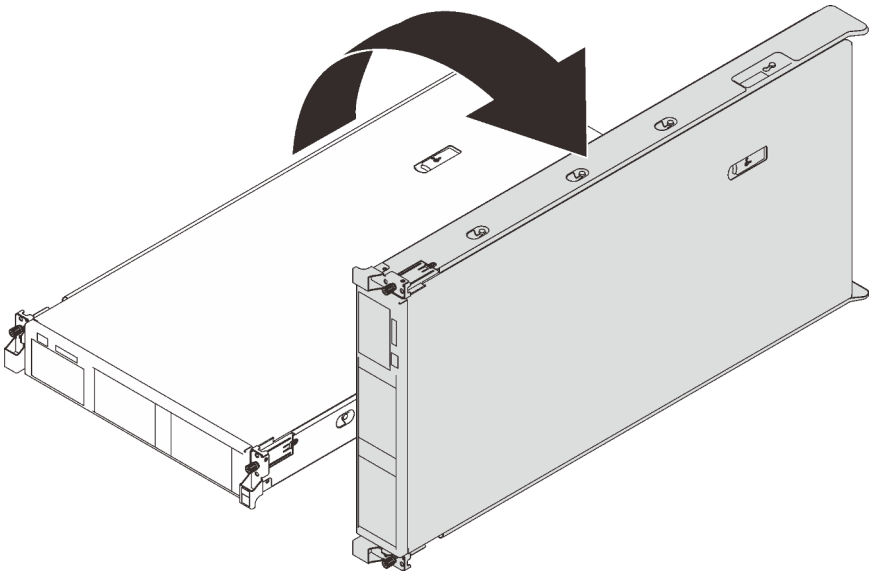

Figure 40. Rotating the server

Step 6. Lift the server with two people, and slide it into the C-channels.

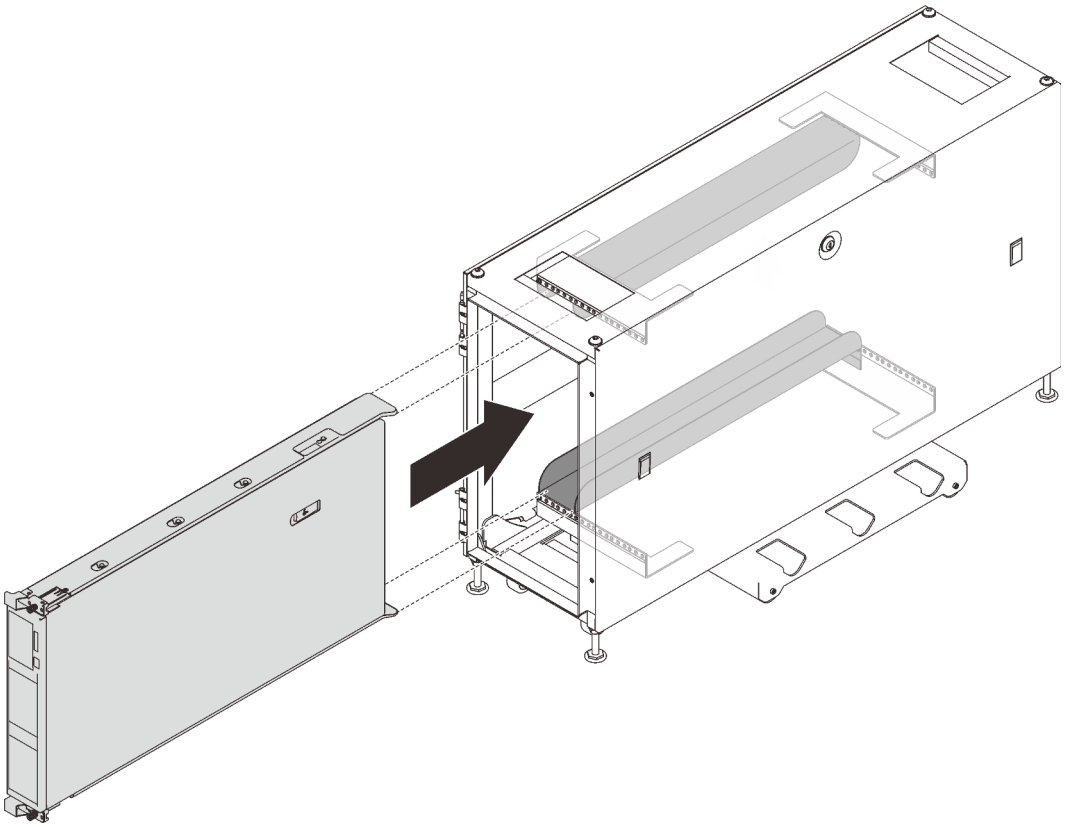

Figure 41. Installing the server into the rack cabinet

Step 7. Tighten both the upper and lower captive thumb screws.

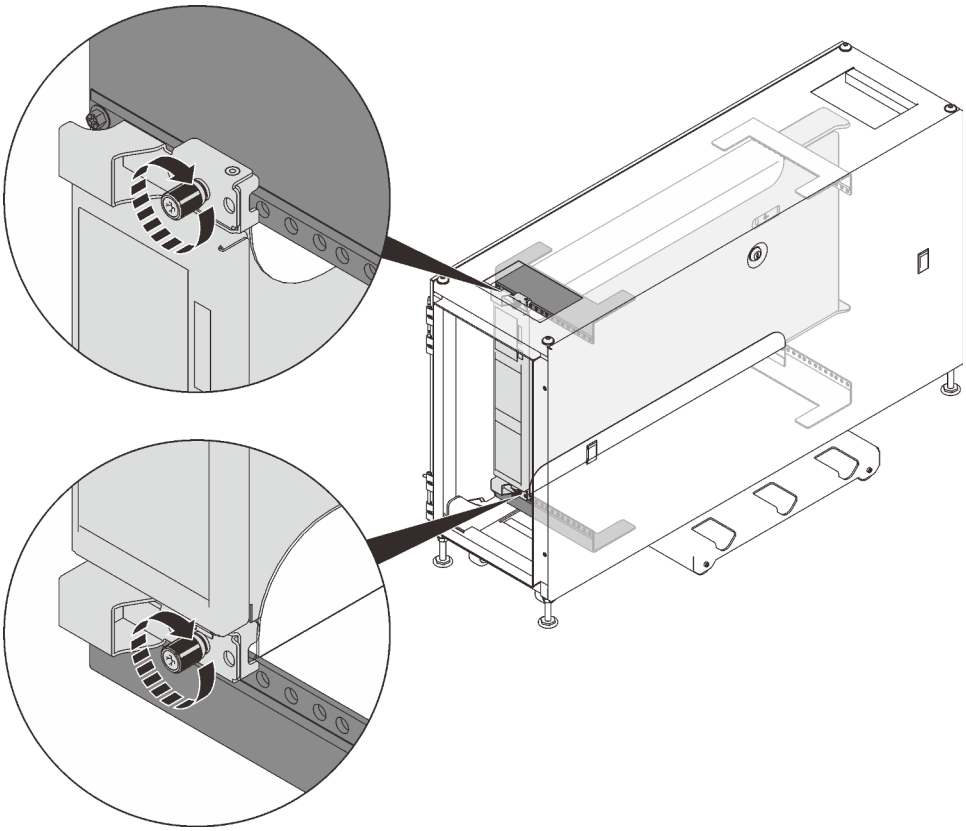

Figure 42. Securing the rack mounting brackets

Step 8. Secure each rack mounting bracket with two M5 x 20 mm screws.

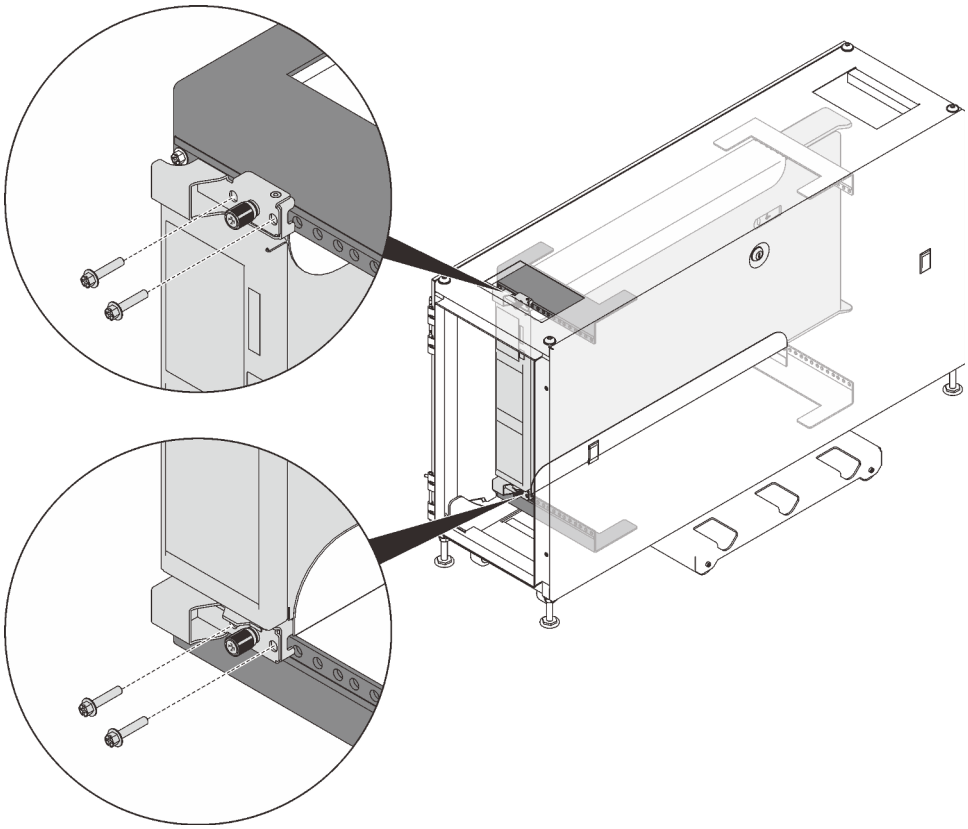

Figure 43. Securing the rack mounting brackets

Install the DPI universal rack power distribution unit

Follow the instructions in this section to install the DPI universal rack power distribution unit.

About this task

See the following table to identify the components that come with the rail kit.

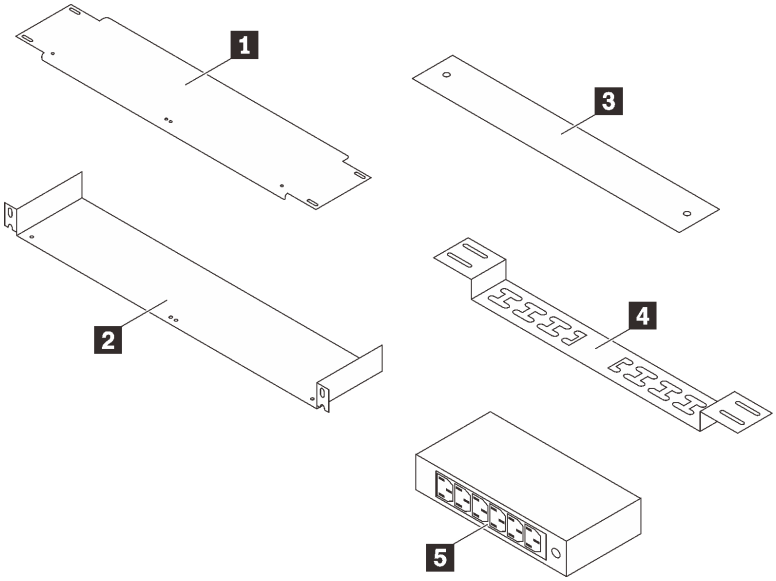

1 One small mounting plate	4 One cable management bracket
2 One horizontal mounting plate	5 One power distribution unit
3 One 1U blank filler panel	

Procedure

Step 1. Secure the power distribution unit to one side of the horizontal mounting plate with two screws.

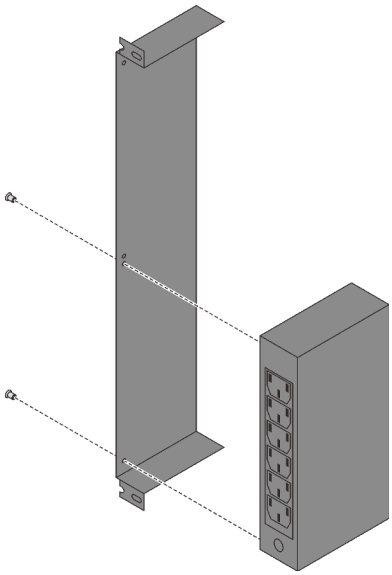

Figure 44. Securing the power distribution unit

Step 2. Install the bracket to the rack.

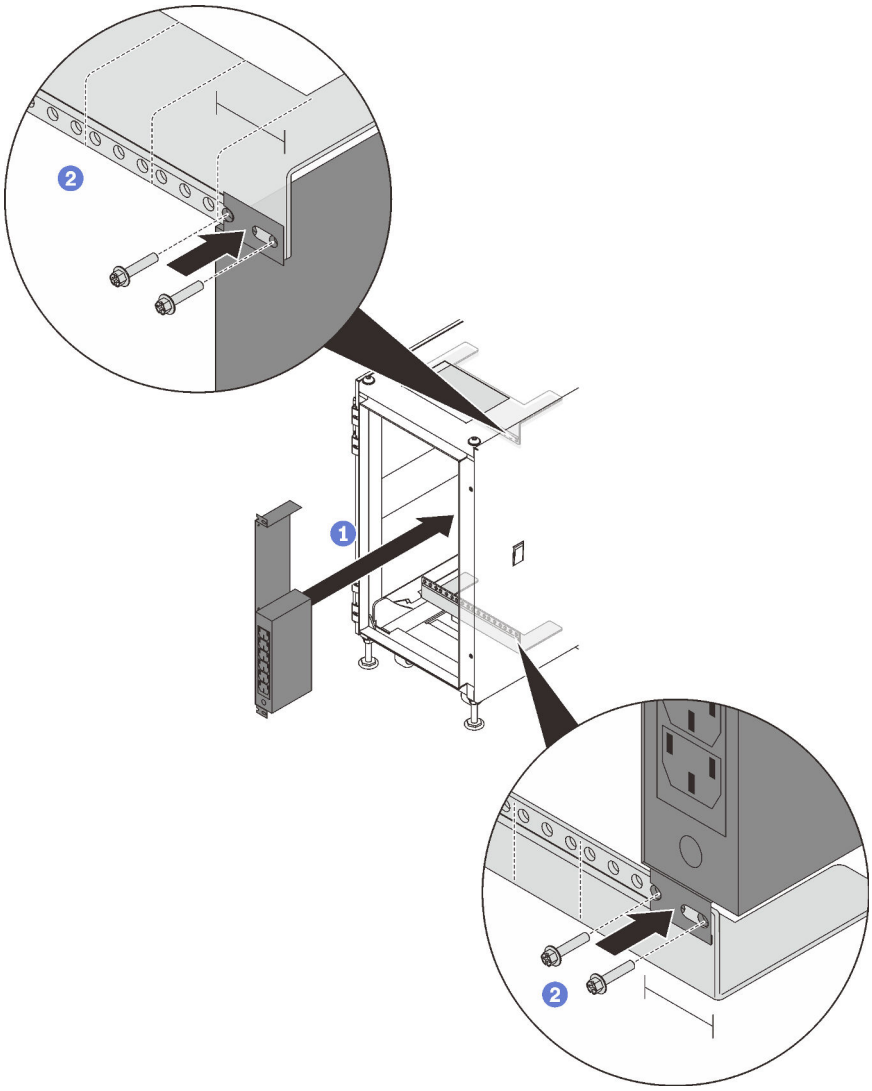

Figure 45. Securing the power distribution unit

① Align the bracket to the 1U on the rear side of the rack.

② Secure the two ends of the bracket to the top and bottom rack with two pairs of screws.

Installing switches

See this section to learn how to install switches into ThinkSystem Micro DataCenter 6U 800mm Deep Rack Cabinet.

This rack cabinet supports the following switches. See the corresponding links for installation instructions.

- https://systemx.lenovofiles.com/help/topic/com.lenovo.thinksystem.ne0152t.doc/ts_ne0152t.html
- https://systemx.lenovofiles.com/help/topic/com.lenovo.thinksystem.ne1032t.doc/ts_ne1032t.html
- https://systemx.lenovofiles.com/help/topic/com.lenovo.thinksystem.ne2572.doc/ts_ne2572.html
- https://systemx.lenovofiles.com/help/topic/com.lenovo.rackswitch.ce0152pb.doc/rs_ce0152pb.html

Note: Before installing NE1032T and NE1072T RackSwitch with corresponding rail-kit into the rack cabinet, tilt them slightly so that they can slide through the cabinet frame.

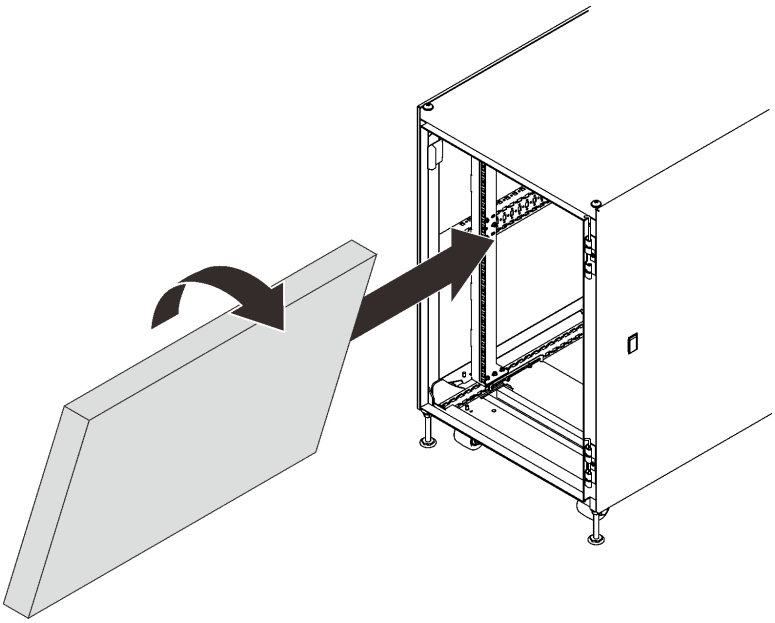

Figure 46. Tilting the switch to fit in the cabinet

Installing uninterruptible power systems (UPS)

See this section to learn how to install uninterruptible power systems (UPS).

Following the instructions in the following link to do removal, installation, or to update compatible software for 5P1500R-L (120V) and 5P1550GR-L (230V).

https://www.eaton.com/us/en-us/catalog/backup-power-ups-surge-it-power-distribution/eaton-5p-ups.resources.html

Chapter 7. Hardware removal, installation and conversion

See this section for hardware replacement and conversion.

Removing and installing the side panels

Follow the instructions in this section to remove and install the side panels.

Remove the side panels

Complete the following steps to remove the side panels.

Step 1. Acquire the key that comes with the cabinet.

Step 2. Insert the key that comes with the rack cabinet into the key hole on the side panel, and turn it counterclockwise to unlock the panel.

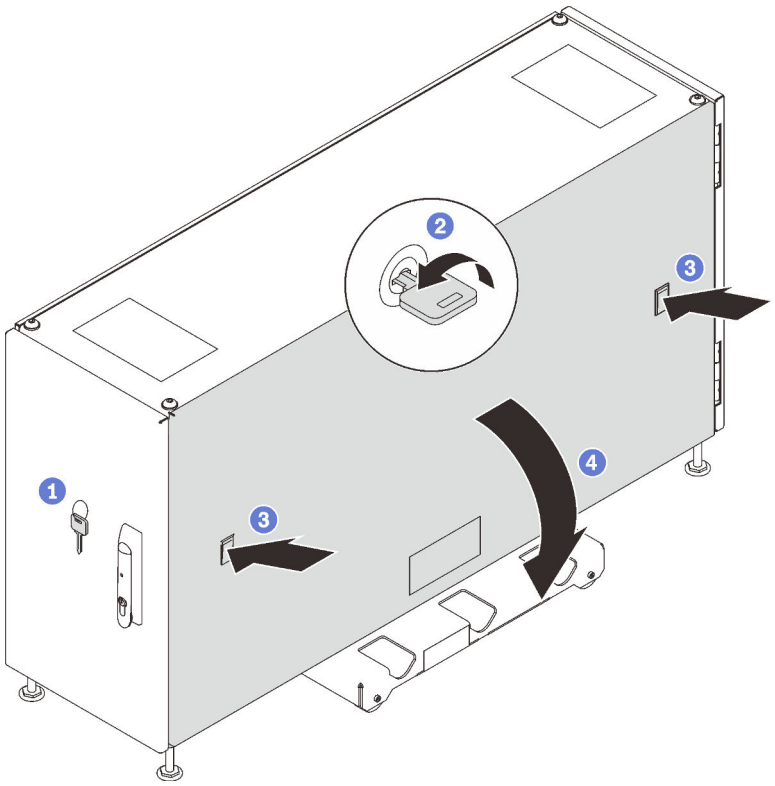

Figure 47. Removing the side panel

Step 3. Press on the latch on both sides of the panel at the same time to release the side panel.

Step 4. Pivot the top of the panel away from the cabinet frame to remove it.

Install the side panels

Complete the following steps to install the side panels.

Step 1. Align the bottom of the panel to the slot on the bottom of the cabinet frame, and pivot the top of the panel towards the cabinet frame.

© Copyright Lenovo 2020

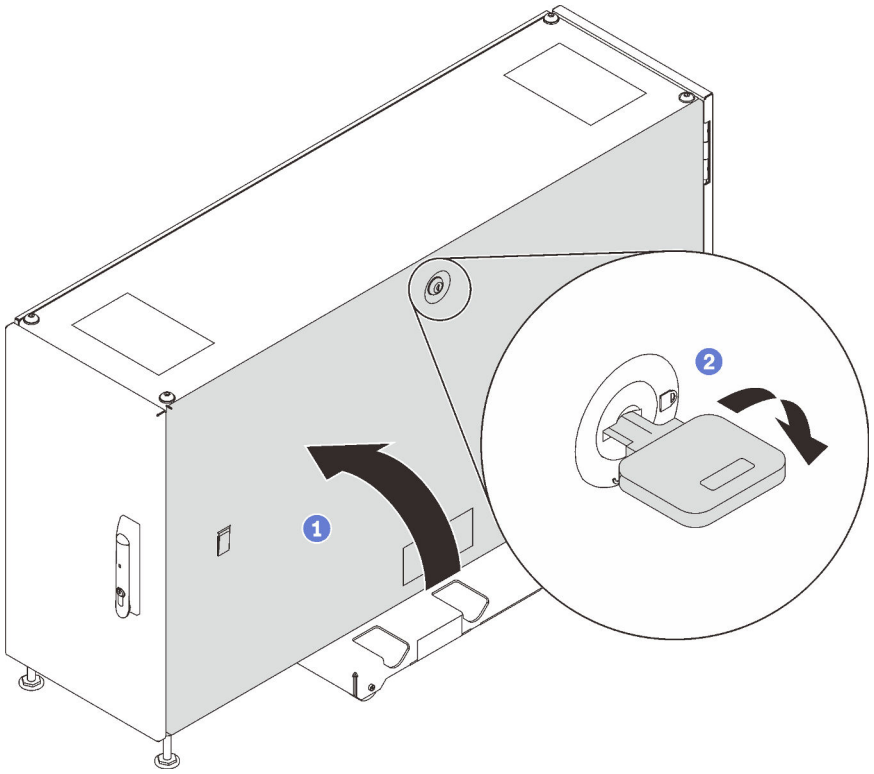

Figure 48. Installing the side panel

Step 2. Insert the key and turn it clockwise to secure the panel to the cabinet frame.

Removing, installing and reversing the doors

Follow the instructions in this section to remove, install, and reverse the doors.

Remove the door

Follow the instructions in this section to remove the cabinet door.

About this task

Note: For safety, this task must be done by two people.

Procedure

1. If necessary, insert the key and turn it clockwise to unlock the door.
2. Pull the lower end of the handle up and clockwise; then, open the door.

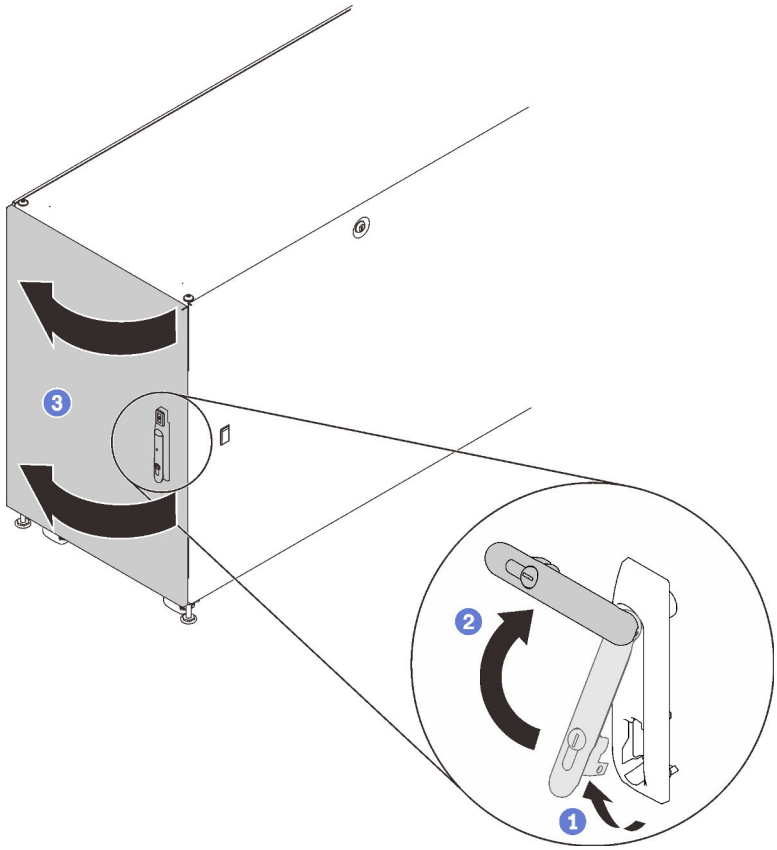

Figure 49. Opening the door

After this task is completed

Step 1. Pull up and hold both of the hinge shafts to disengage the door from the cabinet frame; then, remove the door.

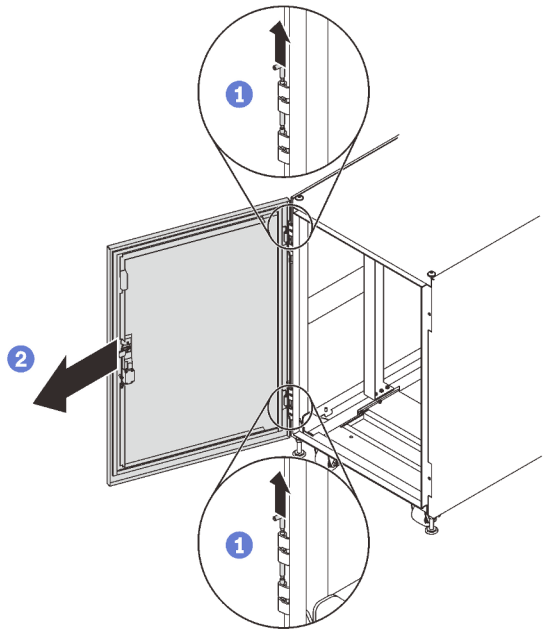

Figure 50. Removing the door

Install the door

About this task

Note: For safety, this task must be done by two people.

Procedure

Step 1. Align the door to the frame hinges, and push the shafts in to secure the door to the frame.

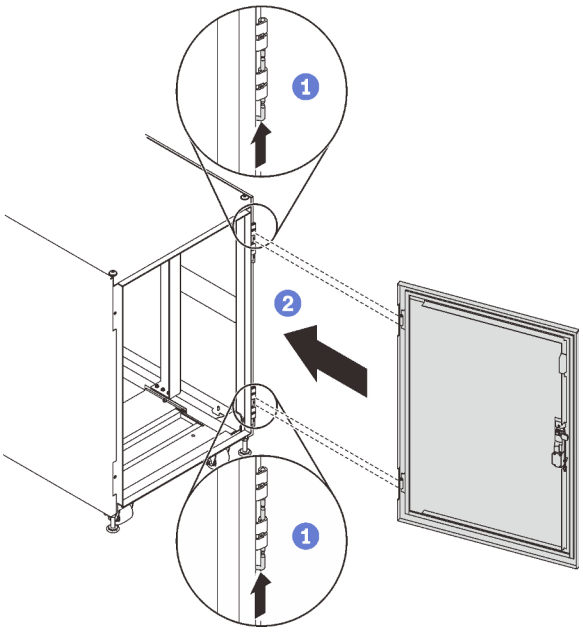

Figure 51. Installing the door

After this task is completed

1. Close the cabinet door, and turn the door handle counterclockwise to secure it.

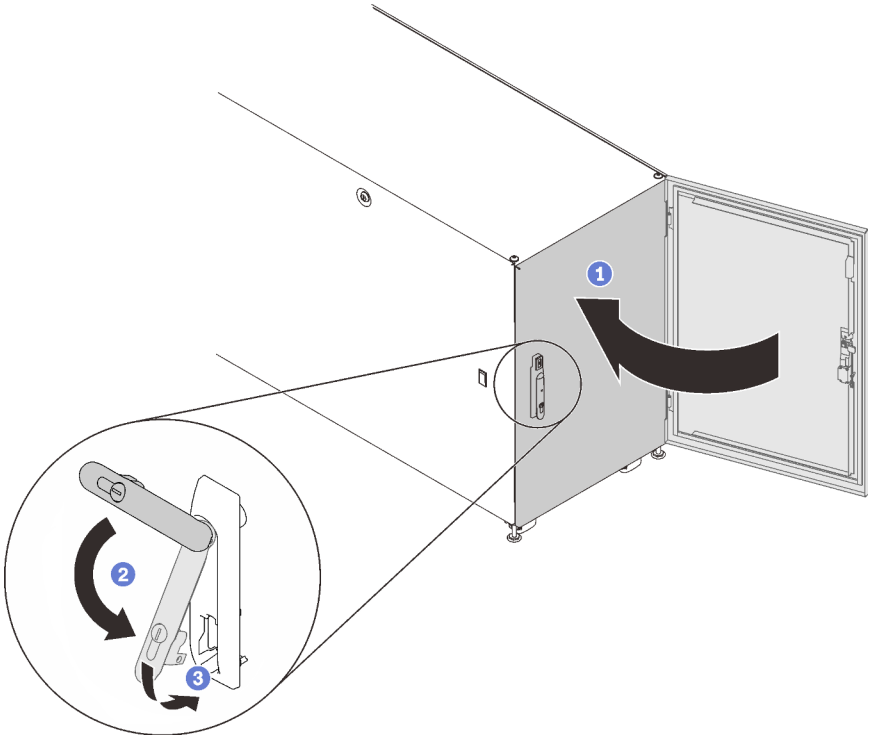

Figure 52. Closing the cabinet door

2. If necessary, insert the key and turn it counterclockwise to lock the door.

Reverse the door

Both the doors of this cabinet are reversible. Follow the instructions in this section to reverse the cabinet door.

Note: For safety, this task must be done by two people.

1. If necessary, insert the key and turn it clockwise to unlock the door.
2. Pull the lower end of the handle up and clockwise; then, open the door.

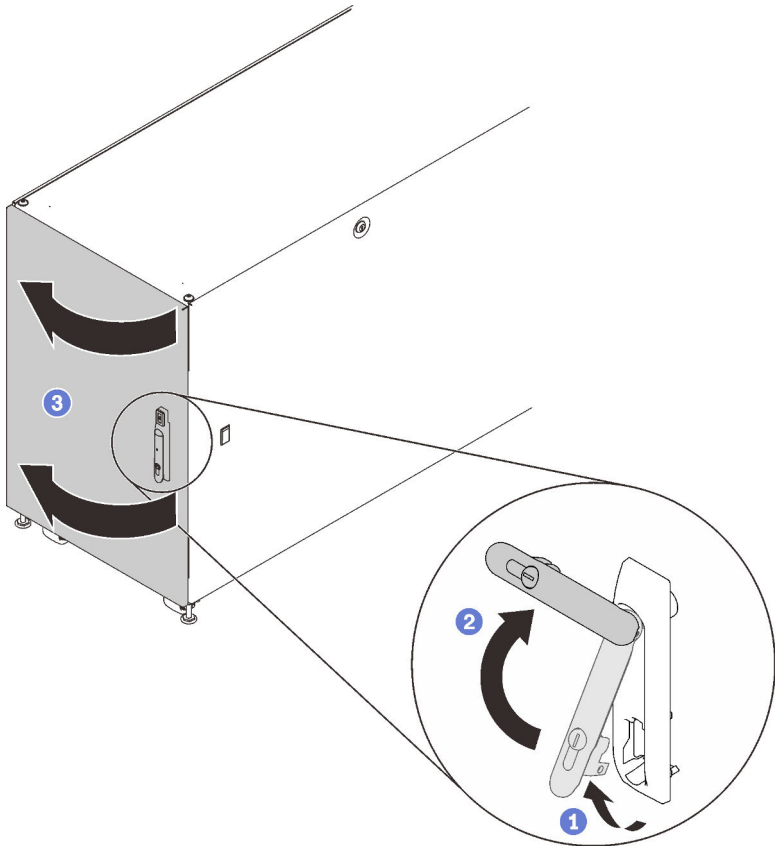

Figure 53. Opening the door

Procedure

Step 1. Pull up and hold both of the hinge shafts to disengage the door from the cabinet frame; then, remove the door.

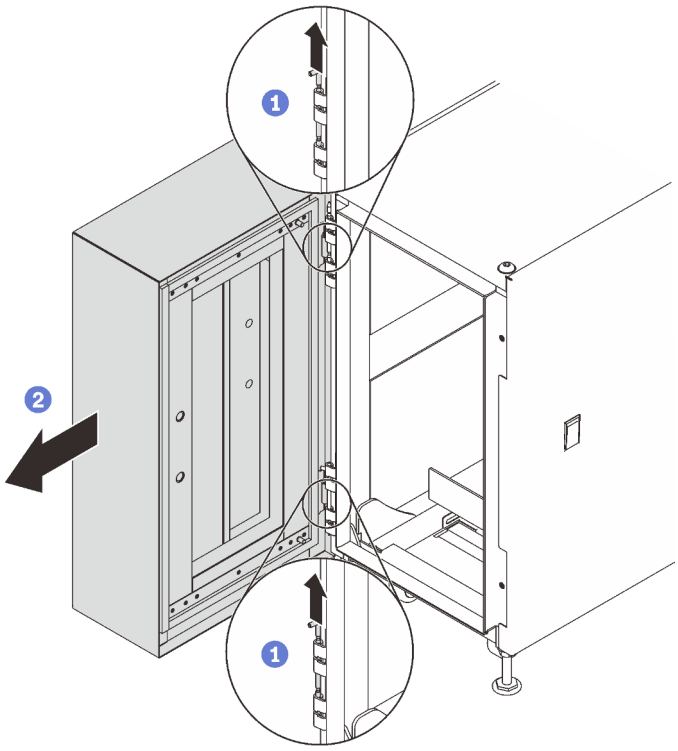

Figure 54. Removing the door

Step 2. Remove the screws that secure the hinges to the cabinet frame.

Step 3. Rotate both hinges 180 degree, switch the top and bottom hinges; then, install them to the opposite side of the frame.

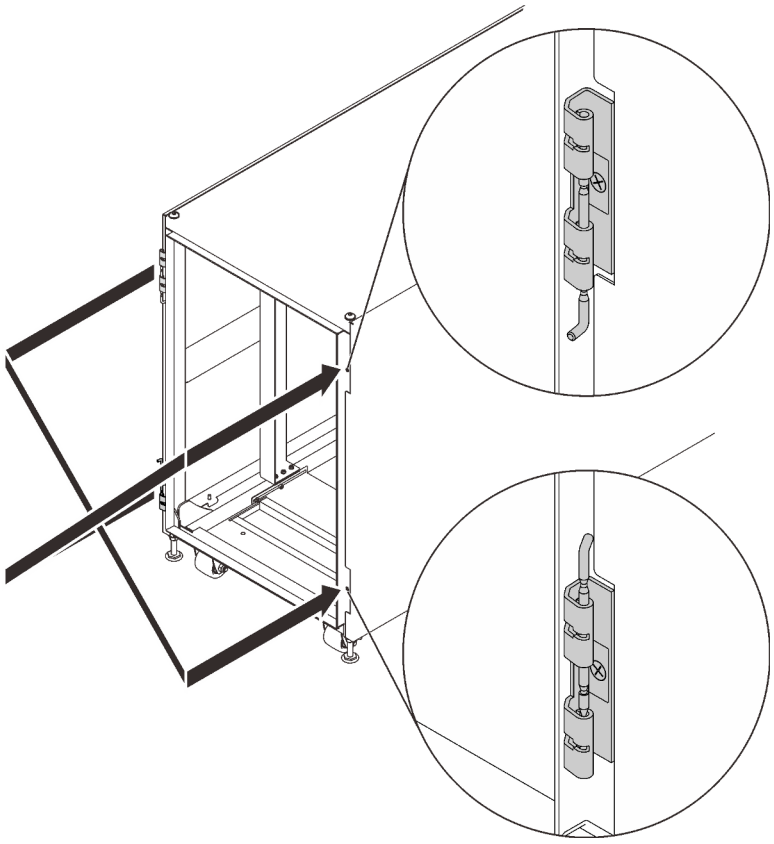

Figure 55. Converting the cabinet frame hinges

Step 4. If the cabinet comes with door position monitor devices, complete the following steps to remove and reinstall the devices.

a. Remove the two screws that secure the door position monitor device to the cabinet frame.

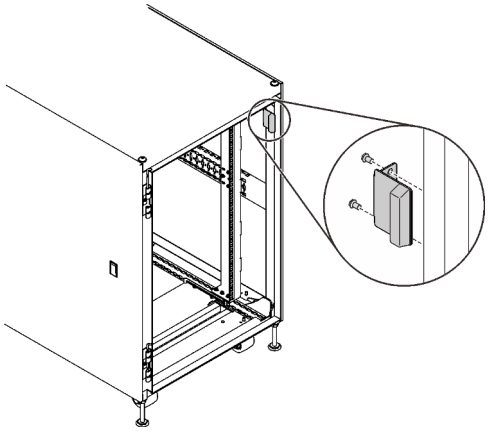

Figure 56. Removing the door position monitor device

b. Install the device to the equivalent location on the opposite side on the cabinet frame.

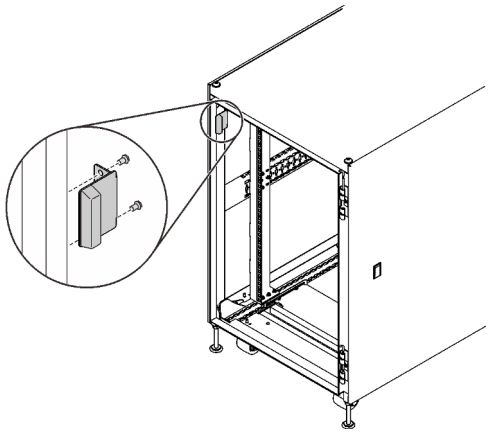

Figure 57. Installing the door position monitor device

c. Remove the device from the door, and install it to the equivalent location on the opposite side of the door.

Figure 58. Removing and installing the door position monitor device

Step 5. Remove the screws that secure the handle to the door; then, rotate the door 180 degree while keeping the handle in the original orientation, and secure the handle to the door with screws.

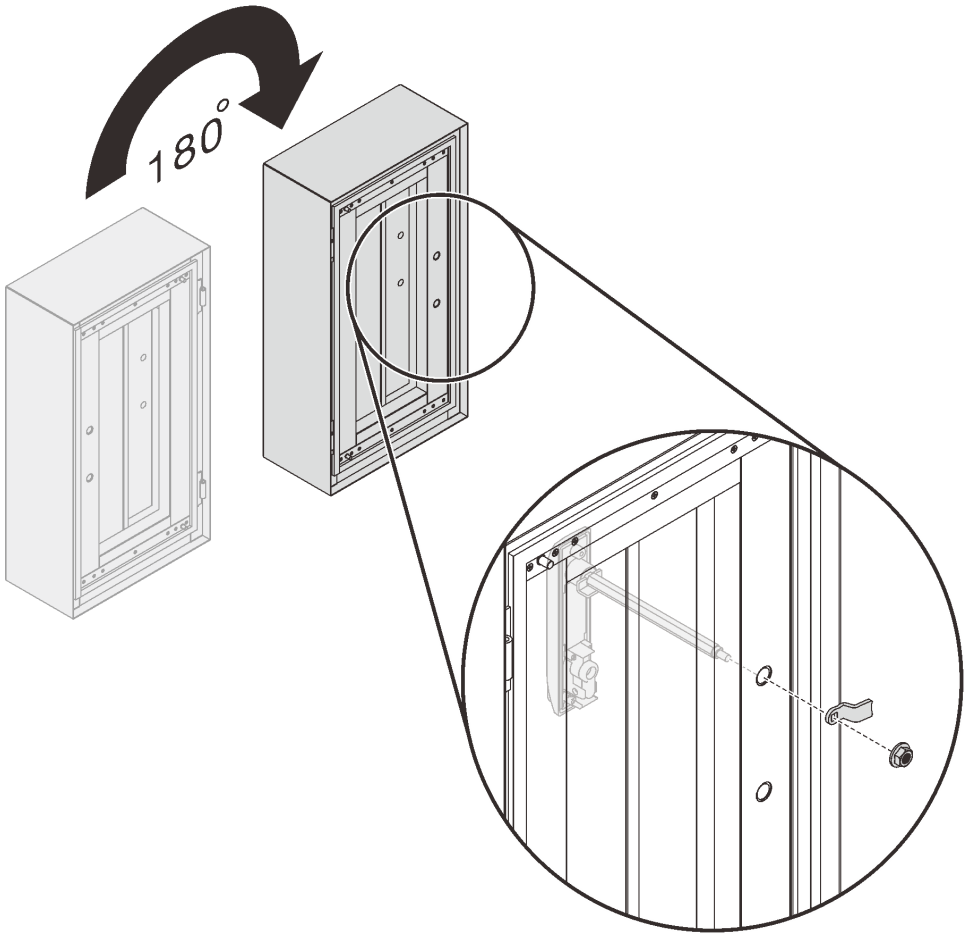

Figure 59. Installing the handle brackets

Step 6. Align the door to the frame hinges, and push the shafts in to secure the door to the frame.

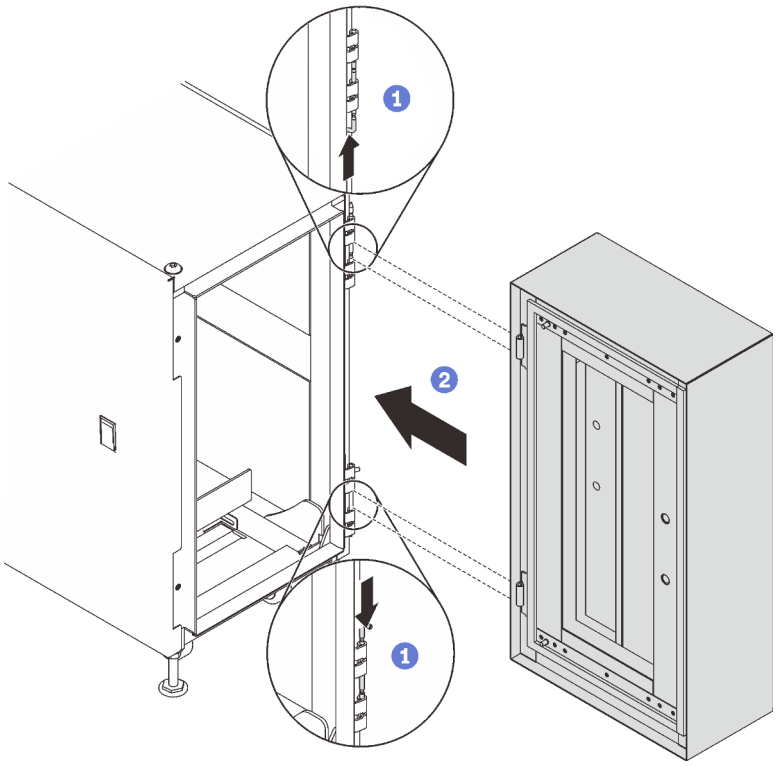

Figure 60. Installing the door

After this task is completed

1. Close the cabinet door, and turn the door handle counterclockwise to secure it.

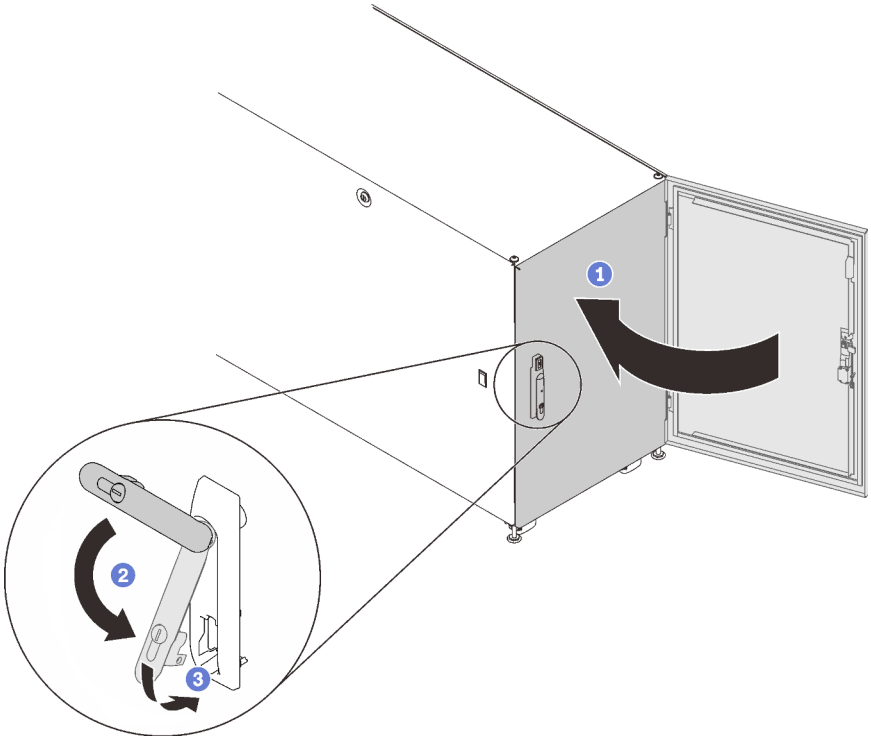

Figure 61. Closing the cabinet door

2. If necessary, insert the key and turn it counterclockwise to lock the door.

Door position monitor device replacement

See this section for replacement of the door position monitor device.

Note: This component is a Third Party Option parts. Not with standing anything to the contrary, third party options are excluded from Lenovo Statement of Limited Warranty. See https://support.lenovo.com/us/en/solutions/ht510461 for details.

Some cabinets might come with the following devices:

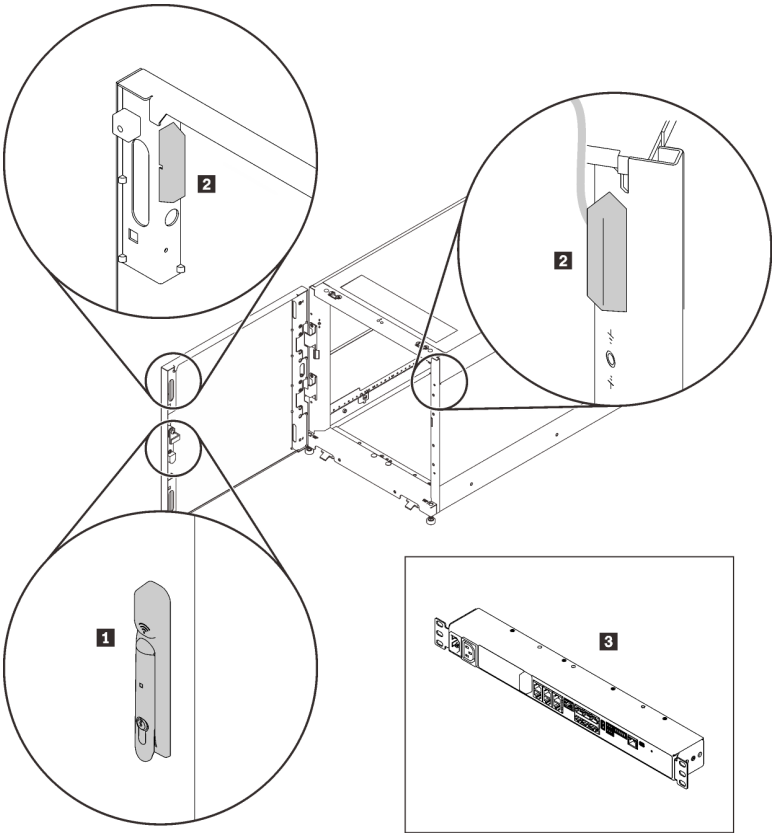

Figure 62. Door position monitor devices

- 1 Electronics lock
- 2 Door position monitor magnet and switch
- 3 Environmental monitoring appliance

In this case, contact the following for technical support and service with these devices.

- Phone number: +86-400-810-1315 (English/Chinese). Service hours: (UTC+8):
  - **Monday-Friday:** 08:15-18:00
  - **Saturday:** 09:00-17:00
- E-mail address: itbtech.support@schneider-electric.com
- Service website: https://www.schneider-electric.cn/zh/work/services/

Download the latest version of the *User Guide* from the applicable product page of https://www.apc.com. To find a product page, enter the part number (NBRK0250) into the search field. You can also find the

documentation on https://www.se.com: enter the part number in the search field, and select **Documents and Software** under **Product information**.

Remove the door position monitor device

About this task

1. If necessary, insert the key and turn it clockwise to unlock the door.
2.

Procedure

Step 1. Remove the two screws that secure the door position monitor device to the cabinet frame.

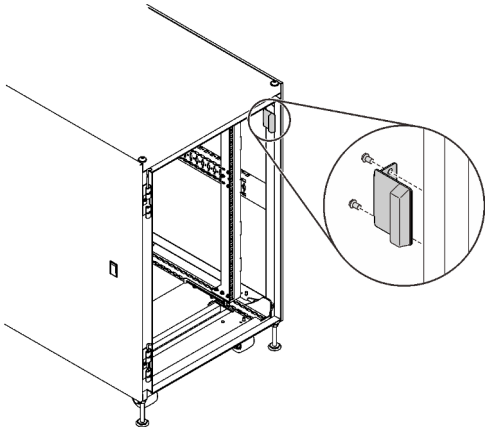

Figure 63. Removing door position monitor device

Install the door position monitor device

Procedure

Step 1. Secure the device to the cabinet frame with two screws.

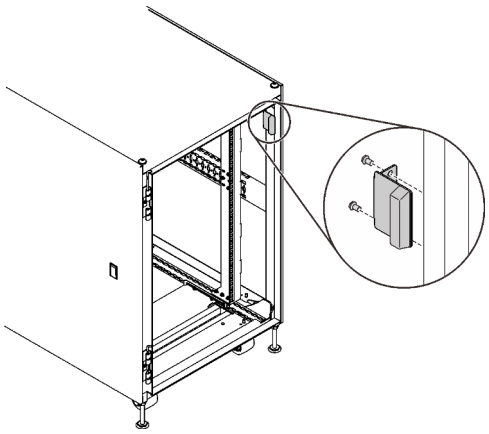

Figure 64. Installing the door position monitor device

After this task is completed

1.

a. Close the cabinet door, and turn the door handle counterclockwise to secure it.

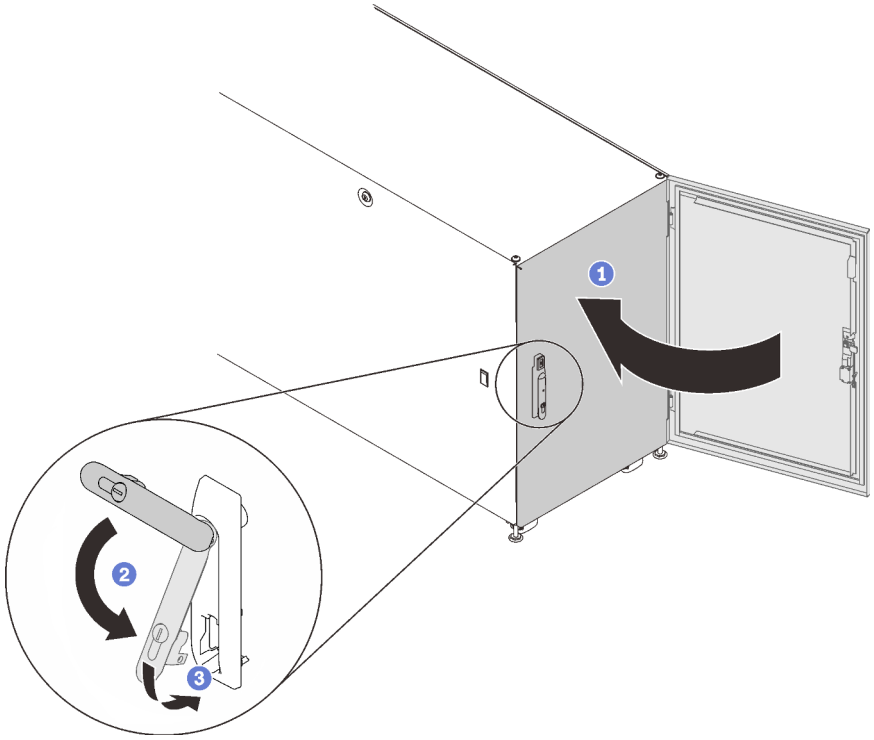

Figure 65. Closing the cabinet door

b. If necessary, insert the key and turn it counterclockwise to lock the door.

Appendix A. Getting help and technical assistance

If you need help, service, or technical assistance or just want more information about Lenovo products, you will find a wide variety of sources available from Lenovo to assist you.

On the World Wide Web, up-to-date information about Lenovo systems, optional devices, services, and support are available at:

http://datacentersupport.lenovo.com

Note: This section includes references to IBM web sites and information about obtaining service. IBM is Lenovo's preferred service provider for ThinkSystem.

Before you call

Before you call, there are several steps that you can take to try and solve the problem yourself. If you decide that you do need to call for assistance, gather the information that will be needed by the service technician to more quickly resolve your problem.

Attempt to resolve the problem yourself

You can solve many problems without outside assistance by following the troubleshooting procedures that Lenovo provides in the online help or in the Lenovo product documentation. The Lenovo product documentation also describes the diagnostic tests that you can perform. The documentation for most systems, operating systems, and programs contains troubleshooting procedures and explanations of error messages and error codes. If you suspect a software problem, see the documentation for the operating system or program.

You can find the product documentation for your ThinkSystem products at the following location:

http://thinksystem.lenovofiles.com/help/index.jsp

You can take these steps to try to solve the problem yourself:

- Check all cables to make sure that they are connected.
- Check the power switches to make sure that the system and any optional devices are turned on.
- Check for updated software, firmware, and operating-system device drivers for your Lenovo product. The Lenovo Warranty terms and conditions state that you, the owner of the Lenovo product, are responsible for maintaining and updating all software and firmware for the product (unless it is covered by an additional maintenance contract). Your service technician will request that you upgrade your software and firmware if the problem has a documented solution within a software upgrade.
- If you have installed new hardware or software in your environment, check http://www.lenovo.com/us/en/serverproven/ to make sure that the hardware and software is supported by your product.
- Go to http://datacentersupport.lenovo.com and check for information to help you solve the problem.
  - Check the Lenovo forums at https://forums.lenovo.com/t5/Datacenter-Systems/ct-p/sv_eg to see if someone else has encountered a similar problem.

You can solve many problems without outside assistance by following the troubleshooting procedures that Lenovo provides in the online help or in the Lenovo product documentation. The Lenovo product documentation also describes the diagnostic tests that you can perform. The documentation for most systems, operating systems, and programs contains troubleshooting procedures and explanations of error

© Copyright Lenovo 2020

messages and error codes. If you suspect a software problem, see the documentation for the operating system or program.

Gathering information needed to call Support

If you believe that you require warranty service for your Lenovo product, the service technicians will be able to assist you more efficiently if you prepare before you call. You can also see http://datacentersupport.lenovo.com/warrantylookup for more information about your product warranty.

Gather the following information to provide to the service technician. This data will help the service technician quickly provide a solution to your problem and ensure that you receive the level of service for which you might have contracted.

- Hardware and Software Maintenance agreement contract numbers, if applicable
- Machine type number (Lenovo 4-digit machine identifier)
- Model number
- Serial number
- Current system UEFI and firmware levels
- Other pertinent information such as error messages and logs

As an alternative to calling Lenovo Support, you can go to https://www-947.ibm.com/support/servicerequest/Home.action to submit an Electronic Service Request. Submitting an Electronic Service Request will start the process of determining a solution to your problem by making the pertinent information available to the service technicians. The Lenovo service technicians can start working on your solution as soon as you have completed and submitted an Electronic Service Request.

Contacting Support

You can contact Support to obtain help for your issue.

You can receive hardware service through a Lenovo Authorized Service Provider. To locate a service provider authorized by Lenovo to provide warranty service, go to https://datacentersupport.lenovo.com/serviceprovider and use filter searching for different countries. For Lenovo support telephone numbers, see https://datacentersupport.lenovo.com/supportphonelist for your region support details.

Appendix B. Notices

Lenovo may not offer the products, services, or features discussed in this document in all countries. Consult your local Lenovo representative for information on the products and services currently available in your area.

Any reference to a Lenovo product, program, or service is not intended to state or imply that only that Lenovo product, program, or service may be used. Any functionally equivalent product, program, or service that does not infringe any Lenovo intellectual property right may be used instead. However, it is the user's responsibility to evaluate and verify the operation of any other product, program, or service.

Lenovo may have patents or pending patent applications covering subject matter described in this document. The furnishing of this document is not an offer and does not provide a license under any patents or patent applications. You can send inquiries in writing to the following:

Lenovo (United States), Inc.
1009 Think Place
Morrisville, NC 27560
U.S.A.
Attention: Lenovo VP of Intellectual Property

LENOVO PROVIDES THIS PUBLICATION “AS IS” WITHOUT WARRANTY OF ANY KIND, EITHER EXPRESS OR IMPLIED, INCLUDING, BUT NOT LIMITED TO, THE IMPLIED WARRANTIES OF NON-INFRINGEMENT, MERCHANTABILITY OR FITNESS FOR A PARTICULAR PURPOSE. Some jurisdictions do not allow disclaimer of express or implied warranties in certain transactions, therefore, this statement may not apply to you.

This information could include technical inaccuracies or typographical errors. Changes are periodically made to the information herein; these changes will be incorporated in new editions of the publication. Lenovo may make improvements and/or changes in the product(s) and/or the program(s) described in this publication at any time without notice.

The products described in this document are not intended for use in implantation or other life support applications where malfunction may result in injury or death to persons. The information contained in this document does not affect or change Lenovo product specifications or warranties. Nothing in this document shall operate as an express or implied license or indemnity under the intellectual property rights of Lenovo or third parties. All information contained in this document was obtained in specific environments and is presented as an illustration. The result obtained in other operating environments may vary.

Lenovo may use or distribute any of the information you supply in any way it believes appropriate without incurring any obligation to you.

Any references in this publication to non-Lenovo Web sites are provided for convenience only and do not in any manner serve as an endorsement of those Web sites. The materials at those Web sites are not part of the materials for this Lenovo product, and use of those Web sites is at your own risk.

Any performance data contained herein was determined in a controlled environment. Therefore, the result obtained in other operating environments may vary significantly. Some measurements may have been made on development-level systems and there is no guarantee that these measurements will be the same on generally available systems. Furthermore, some measurements may have been estimated through extrapolation. Actual results may vary. Users of this document should verify the applicable data for their specific environment.

© Copyright Lenovo 2020

Trademarks

Lenovo, the Lenovo logo, Micro DataCenter, ThinkSystem, Flex System, System x, NeXtScale System, and X Architecture are trademarks of Lenovo in the United States, other countries, or both.

Intel and Intel Xeon are trademarks of Intel Corporation in the United States, other countries, or both.

Internet Explorer, Microsoft, and Windows are trademarks of the Microsoft group of companies.

Linux is a registered trademark of Linus Torvalds.

Other company, product, or service names may be trademarks or service marks of others.

Index

C

creating a personalized support web page 55
custom support web page 55

D

door 42, 44–45

G

Getting help 55
grounding cable 15

H

hardware service and support telephone numbers 56
help 55

I

install 19, 37, 42, 44
  door position monitor device 53
Installing optional kits 19, 39–40
introduction 1

M

managing cables 15
Micro DataCenter 7
moving 7

N

notices 57

P

parts listing 5
power distribution units 37

R

rack cabinet 7
rail kit 19
remove
  door position monitor device 53
reverse 45

S

safety iii
safety statement iv
service and support
  before you call 55
  hardware 56
  software 56
software service and support telephone numbers 56
specifications 3
support web page, custom 55

T

telephone numbers 56
ThinkSystem Micro DataCenter iv
ThinkSystem Micro DataCenter 6U 1200 mm Deep Rack Cabinet 1, 3, 5, 7, 15, 19, 37, 39–40, 42, 45, 53
ThinkSystem Micro DataCenter 6U 800 mm Deep Rack Cabinet 41
trademarks 58

© Copyright Lenovo 2020

Lenovo

Part Number: SP47A41857

Printed in China

(1P) P/N: SP47A41857