ThinkSystem SR655
Setup Guide

Machine Types: 7Y00 and 7Z01

Note

Before using this information and the product it supports, be sure to read and understand the safety information and the safety instructions, which are available at:
https://pubs.lenovo.com/safety_documentation/

In addition, be sure that you are familiar with the terms and conditions of the Lenovo warranty for your server, which can be found at:
http://datacentersupport.lenovo.com/warrantylookup

Seventeenth Edition (April 2024)

Contents

Chapter 1. Introduction

The ThinkSystem™ SR655 server is a 1-socket 2U server that features the new AMD EPYC 7002 family of processors. The server offers a broad selection of drive and slot configurations and offers high performance and expansion for various IT workloads. Combining performance and flexibility, the server is a great choice for enterprises of all sizes.

Performance, ease of use, reliability, and expansion capabilities were key considerations in the design of the server. These design features make it possible for you to customize the system hardware to meet your needs today and provide flexible expansion capabilities for the future.

The server comes with a limited warranty. For details about the warranty, see:
https://support.lenovo.com/us/en/solutions/ht503310

For details about your specific warranty, see:
http://datacentersupport.lenovo.com/warrantylookup

Identifying your server

When you contact Lenovo for help, the machine type and serial number information help support technicians to identify your server and provide faster service.

The machine type and serial number are on the ID label on the right rack latch in the front of the server.

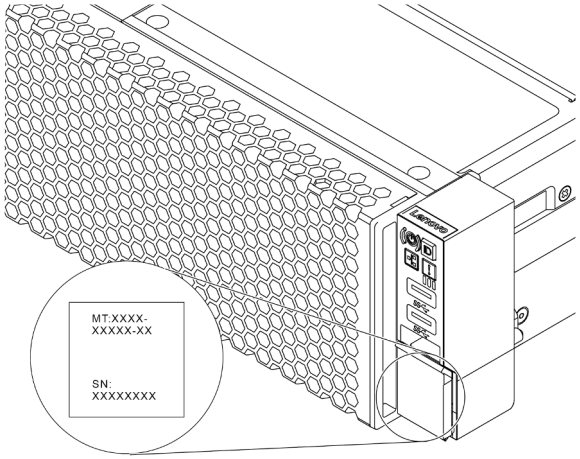

Figure 1. Location of the ID label

BMC network access label

The network access label for the baseboard management controller (BMC) is attached on the top side of the pull-out information tab. After you get the server, peel the network access label away and store it in a safe place.

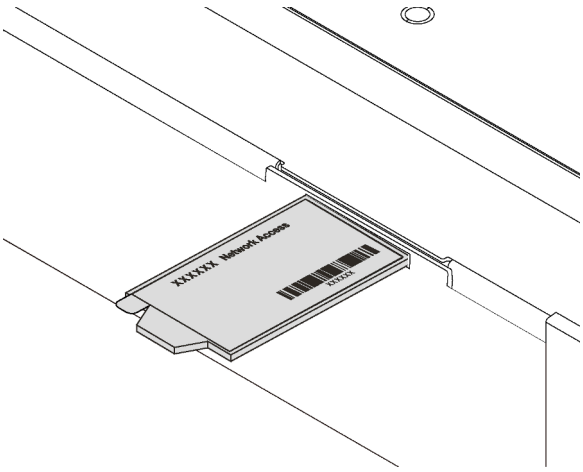

Figure 2. Location of the BMC network access label

Quick response code

The system service label, which is on the top cover, provides a quick response (QR) code for mobile access to service information. Scan the QR code with a mobile device and a QR code reader application to get quick access to the Lenovo Service Web site for this server. The Lenovo Service Information Web site provides additional information for parts installation and replacement videos, and error codes for server support.

The following illustration shows the QR code: https://datacentersupport.lenovo.com/products/servers/thinksystem/sr655/7y00

Figure 3. QR code

Server package contents

When you receive your server, verify that the shipment contains everything that you expected to receive.

The server package includes the following items:

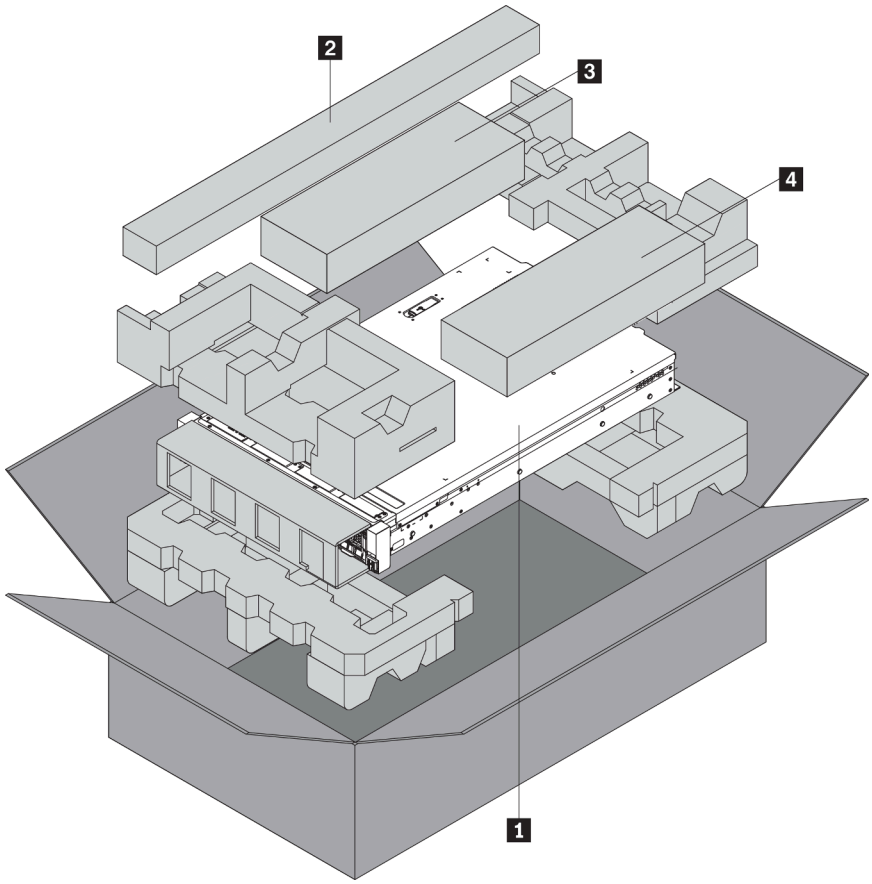

Note: Items marked with asterisk (*) are available on some models only.

1. Server
2. Rail kit*. Detailed instructions for installing the rail kit are provided in the package with the rail kit.
3. Cable management arm*
4. Material box, including items such as accessory kit, power cords* and documentation

Features

Performance, ease of use, reliability, and expansion capabilities were key considerations in the design of the server. These design features make it possible for you to customize the system hardware to meet your needs today and provide flexible expansion capabilities for the future.

Your server implements the following features and technologies:

- **Baseboard management controller (BMC)**

  The BMC is the common management controller for Lenovo ThinkSystem server hardware. It complies with the Intelligent Platform Management Interface, version 2.0 (IPMI v2.0), and consolidates the service processor functionality, super I/O, video controller, and remote presence capabilities into a single chip on the server system board.

  Note: Because there is no battery backup for RTC in the server, the BMC will load the default date 2020/1/1 after AC cycle. The date will sync with that of BIOS after BIOS initiation.

  You can use the Lenovo ThinkSystem System Manager, a Web-based interface, to access the BMC and apply BMC management options. For detailed information, see:

https://thinksystem.lenovofiles.com/help/topic/7Y00/bmc_user_guide.pdf

- **UEFI-compliant server firmware**

  Lenovo ThinkSystem firmware is Unified Extensible Firmware Interface (UEFI) compliant. UEFI replaces BIOS and defines a standard interface between the operating system, platform firmware, and external devices.

  Lenovo ThinkSystem servers are capable of booting UEFI-compliant operating systems, BIOS-based operating systems, and BIOS-based adapters as well as UEFI-compliant adapters.

  Note: The server does not support Disk Operating System (DOS).

- **Large system-memory capacity**

  The server supports up to 16 TruDDR4 RDIMMs with Error Checking and Correcting (ECC) technology. For more information about the specific types and maximum amount of memory, see "Specifications" on page 5.

- **Flexible network support**

  The server has an Open Compute Project (OCP) 3.0 slot for an OCP 3.0 Ethernet adapter, which provides two or four network connectors for network support.

- **Integrated Trusted Platform Module (TPM)**

  This integrated security chip performs cryptographic functions and stores private and public secure keys. It provides the hardware support for the Trusted Computing Group (TCG) specification. You can download the software to support the TCG specification.

  Below table lists the supported TPM versions. For more information on TPM configurations, see "Configure security settings" in the *Maintenance Manual*.

TPM version	Type	Outside Chinese Mainland		Chinese Mainland	
		7002 CPU	7003 CPU	7002 CPU	7003 CPU
TPM 1.2	Onboard chip	√			
TPM 2.0	Onboard chip	√	√		
NationZ TPM 2.0	Daughter card			√	√

- **Large data-storage capacity and hot-swap capability**

  The server models support a maximum of twenty 3.5-inch hot-swap SAS/SATA storage drives or a maximum of thirty-two 2.5-inch hot-swap SAS/SATA/NVMe storage drives.

  With the hot-swap feature, you can add, remove, or replace drives without turning off the server.

- **Light path diagnostics**

  Light path diagnostics provides LEDs to help you diagnose problems. For more information about the light path diagnostics, see:

  – "Front I/O assembly" on page 21
  – "Rear view LEDs" on page 27
  – "System board LEDs" on page 30

- **Mobile access to Lenovo Service Information Website**

  The server provides a QR code on the system service label, which is on the cover of the server, that you can scan using a QR code reader and scanner with a mobile device to get quick access to the Lenovo Service Information Website. The Lenovo Service Information Website provides additional information for parts installation and replacement videos, and error codes for server support.

- **Redundant networking connection**

  The baseboard management controller (BMC) provides failover capability to a redundant Ethernet connection with the applicable application installed. If a problem occurs with the primary Ethernet connection, all Ethernet traffic that is associated with the primary connection is automatically switched to the optional redundant Ethernet connection. If the applicable device drivers are installed, this switching occurs without data loss and without user intervention.
- **Redundant cooling and optional power capabilities**

  The server supports a maximum of two hot-swap power supplies and six hot-swap fans, which provide redundancy for a typical configuration. The redundant cooling by the fans in the server enables continued operation if one of the fans fails.

Specifications

The following information is a summary of the features and specifications of the server. Depending on the model, some features might not be available, or some specifications might not apply.

Table 1. Server specifications

Specification	Description
Dimension	• 2U • Height: 86.5 mm (3.4 inches) • Width: – With rack latches: 482.0 mm (19.0 inches) – Without rack latches: 444.6 mm (17.5 inches) • Depth: 764.7 mm (30.1 inches) **Note:** The depth is measured with rack latches installed, but without the security bezel installed.
Weight	Up to 35.4 kg (78.0 lb), depending on the server configuration
Processor (depending on the model)	• One AMD® EPYC™ 7002 or 7003 processor • Designed for Land Grid Array (LGA) 4094 (SP3) socket • Scalable up to 64 cores • Thermal Design Power (TDP): up to 280 watts For technical rules about processors, see "Technical rules for processor and heat sink" on page 142. For a list of supported processors, see: https://serverproven.lenovo.com/

Table 1. Server specifications (continued)

Specification	Description
Operating systems	Supported and certified operating systems: • Microsoft Windows Server • VMware ESXi • Red Hat Enterprise Linux • SUSE Linux Enterprise Server • Win10 Pro and Win11 Pro for Workstations References: • Complete list of available operating systems: https://lenovopress.lenovo.com/osig. • OS deployment instructions: "Deploy the operating system" on page 215. • For Win10/11 Pro operating systems, the supported I/O list is available at: https://lenovopress.lenovo.com/lp1161-thinksystem-sr655-server#operating-system-support
Memory	• Slots: 16 DIMM slots • Minimum: 8 GB • Maximum: 2 TB • Type (depending on the model): – TruDDR4 2933, single-rank or dual-rank, 8 GB/16 GB/32 GB/64 GB RDIMM – TruDDR4 3200, dual-rank, 16 GB/32 GB/64 GB RDIMM – TruDDR4 2933, quad-rank, 128 GB 3DS RDIMM – TruDDR4 3200, quad-rank, 128 GB 3DS RDIMM **Note:** Operating speed and total memory capacity depend on the processor model and UEFI settings. For installation rules about memory modules, see "Memory module installation rules" on page 137. For a list of supported memory modules, see: https://serverproven.lenovo.com/
Internal drives	The server supports: • Up to twenty 3.5-inch SAS/SATA drives Or up to 16 SAS/SATA drives and 4 NVMe/SAS/SATA drives (NVMe drives supported only in front drive bays 8–11) • Up to thirty-two 2.5-inch SAS/SATA/NVMe drives • Up to two internal M.2 drives The supported drives vary by models. For detailed information, see "Drive bay configurations and requirements" on page 139.
Expansion slots	• Up to nine PCIe slots: eight PCIe slots in the rear and one internal PCIe slot • One OCP 3.0 slot For detailed information, see "Rear view" on page 23.

Table 1. Server specifications (continued)

Specification	Description
Input/Output (I/O) features	• Front panel: – One VGA connector (optional) – Two USB 3.2 Gen 1 (5 Gbps) connectors • Rear panel: – One serial port – One VGA connector – Two USB 3.2 Gen 1 (5 Gbps) connectors – One RJ-45 BMC management connector – Two or four Ethernet connectors on the OCP 3.0 Ethernet adapter (optional)
Graphics processing unit (GPU)	Your server supports the following GPUs or processing adapters: • Half-length, low-profile, single-wide GPUs: – ThinkSystem NVIDIA Quardo P620 2GB PCIe Active GPU – ThinkSystem NVIDIA Tesla T4 16GB PCIe Passive GPU – ThinkSystem NVIDIA A2 16GB Gen4 Passive GPU – ThinkSystem NVIDIA Quadro RTX A2000 12GB PCIe Active GPU • Full-length, full-height, double-wide GPUs: – ThinkSystem NVIDIA Tesla V100 32 GB PCIe Passive GPU – ThinkSystem NVIDIA Tesla V100 16 GB PCIe Passive GPU – ThinkSystem NVIDIA Tesla V100S 32GB PCIe Passive GPU – ThinkSystem NVIDIA A100 40GB PCIe Gen4 Passive GPU – ThinkSystem NVIDIA A100 80GB PCIe Gen4 Passive GPU – ThinkSystem NVIDIA A30 24GB PCIe Gen4 Passive GPU – ThinkSystem NVIDIA A40 48GB PCIe Gen4 Passive GPU – ThinkSystem AMD Instinct MI210 PCIe Gen4 Passive Accelerator – ThinkSystem NVIDIA Quadro RTX A4500 20GB PCIe Active GPU – ThinkSystem NVIDIA Quadro RTX A6000 48GB PCIe Active GPU For technical rules for GPU, see “Technical rules for GPU adapters” on page 145.

Table 1. Server specifications (continued)

Specification	Description
HBA/RAID adapters	• Support the following HBA adapters for JBOD mode: – HBA 430-8i, 430-16i, 430-8e or 430-16e SAS/SATA adapter – HBA 440-8i, 440-16i, 440-8e, or 440-16e SAS/SATA adapter • Support the following RAID adapters for JBOD mode and RAID levels 0, 1, 5, 10, and 50 – RAID 530-8i PCIe adapter – RAID 540-8i PCIe adapter – RAID 730-8i 1G Cache PCIe adapter – RAID 730-8i 2G Flash PCIe adapter – RAID 930-8i, 930-16i, 930-24i or 930-8e Flash PCIe adapter – RAID 940-8i, 940-16i, 940-32i or 940-8e Flash PCIe adapter • Support the following controllers for rich NVMe configurations: – 810-4P NVMe switch adapter – 1610-4P NVMe switch adapter – 1611-8P NVMe switch adapter For technical rules for storage controller adapters, see "Technical rules for HBA/RAID adapters" on page 144.
System fans	• Up to six hot-swap system fans (N+1 redundancy, one redundant fan) • Two types of fans supported: – ThinkSystem SR655 2U fan module (standard fan) – ThinkSystem SR655 performance fan module (speed of 29000 RPM) **Note:** If there is an OCP 3.0 Ethernet adapter installed, when the system is powered off but still plugged in to ac power, fans 5 and fan 6 will continue to spin at a much lower speed. This is the system design to provide proper cooling for the OCP 3.0 Ethernet adapter. For technical rules for system fans, see "Technical rules for system fans" on page 143.

Table 1. Server specifications (continued)

<table>
<tr><th>Specification</th><th>Description</th></tr>
<tr><td>Electrical input</td><td>The server supports up to two hot-swap power supplies for redundancy.
<table>
<tr><th>Power supply</th><th>100–127 V ac
(50–60 Hz)</th><th>200–240 V ac
(50–60 Hz)</th><th>240 V dc*</th><th>-48 V dc</th></tr>
<tr><td>550-watt 80 PLUS Platinum</td><td>√</td><td>√</td><td>√</td><td>×</td></tr>
<tr><td>750-watt 80 PLUS Platinum</td><td>√</td><td>√</td><td>√</td><td>×</td></tr>
<tr><td>750-watt 80 PLUS Titanium</td><td>×</td><td>√</td><td>√</td><td>×</td></tr>
<tr><td>1100-watt 80 PLUS Platinum</td><td>√</td><td>√</td><td>√</td><td>×</td></tr>
<tr><td>1600-watt 80 PLUS Platinum</td><td>×</td><td>√</td><td>√</td><td>×</td></tr>
<tr><td>2000-watt 80 PLUS Platinum</td><td>×</td><td>√</td><td>√</td><td>×</td></tr>
<tr><td>1100-watt -48V DC</td><td>×</td><td>×</td><td>×</td><td>√</td></tr>
</table>
CAUTION:
240 V dc input (input range: 180-300 V dc) is supported in Chinese Mainland ONLY. Power supply with 240 V dc input cannot support hot plugging power cord function. Before removing the power supply with dc input, please turn off server or disconnect dc power sources at the breaker panel or by turning off the power source. Then, remove the power cord.</td></tr>
<tr><td>Minimal configuration for debugging</td><td>• One processor
• One DIMM in slot 1
• One power supply
• One HDD or M.2 drive (if OS is needed for debugging)
• System fans:
– Six system fans if an M.2 drive is installed
– Five system fans (fan 2 to fan 6) if no M.2 drive is installed</td></tr>
</table>

Table 1. Server specifications (continued)

<table>
<tr><th>Specification</th><th>Description</th></tr>
<tr><td>Acoustical noise emissions</td><td>The declared acoustic noise levels are based on below configurations, which may change depending on configurations and conditions:

<table>
<tr><th>Config.</th><th>Typical</th><th>Storage rich</th><th>GPU rich</th></tr>
<tr><td>CPU</td><td>1 x 155 W</td><td>1 x 155 W</td><td>1 x 155 W</td></tr>
<tr><td>DIMM</td><td>16 x 32GB</td><td>16 x 64 GB</td><td>16 x 64 GB</td></tr>
<tr><td>Ethernet</td><td>10 GbE BASE-T 2-port PCIe</td><td>10 GbE BASE-T 4-port PCIe</td><td>10 GbE BASE-T 4-port PCIe</td></tr>
<tr><td>PSU</td><td>2 x 750 W</td><td>2 x 750 W</td><td>2 x 1600 W</td></tr>
<tr><td>RAID</td><td>930-16i RAID</td><td>930-24i RAID</td><td>930-8i RAID</td></tr>
<tr><td>Drive</td><td>16 x 2.5'' HDD</td><td>20 x 3.5'' HDD</td><td>8 x 2.5'' HDD</td></tr>
<tr><td>GPU</td><td>NA</td><td>NA</td><td>2 x V100 GPU</td></tr>
</table>

Sound power levels ($L_{WA,m}$)

<table>
<tr><th>Status</th><th>Typical</th><th>Storage rich</th><th>GPU rich</th></tr>
<tr><td>Idling</td><td>6.2 Bel</td><td>7.0 Bel</td><td>7.0 Bel</td></tr>
<tr><td>Operating</td><td>6.2 Bel</td><td>7.2 Bel</td><td>8.5 Bel</td></tr>
</table>

Sound pressure level ($L_{pA,m}$)

<table>
<tr><th>Status</th><th>Typical</th><th>Storage rich</th><th>GPU rich</th></tr>
<tr><td>Idling</td><td>46 dBA</td><td>54 dBA</td><td>54 dBA</td></tr>
<tr><td>Operating</td><td>47 dBA</td><td>56 dBA</td><td>69 dBA</td></tr>
</table>

Notes:

- These sound levels were measured in controlled acoustical environments according to procedures specified by ISO7779 and are reported in accordance with ISO 9296.
- Government regulations (such as those prescribed by OSHA or European Community Directives) may govern noise level exposure in the workplace and may apply to you and your server installation. The actual sound pressure levels in your installation depend upon a variety of factors, including the number of racks in the installation; the size, materials, and configuration of the room; the noise levels from other equipment; the room ambient temperature, and employee's location in relation to the equipment. Further, compliance with such government regulations depends on a variety of additional factors, including the duration of employees' exposure and whether employees wear hearing protection. Lenovo recommends that you consult with qualified experts in this field to determine whether you are in compliance with the applicable regulations.</td></tr>
<tr><td>Environment</td><td>The server is supported in the following environment:

Note: This server is designed for standard data center environment and recommended to be placed in industrial data center.

- Air temperature:</td></tr>
</table>

Table 1. Server specifications (continued)

Specification	Description
	– Operating: ASHRAE class A2: 10–35°C (50–95°F); when the altitude exceeds 900 m (2953 ft), the maximum ambient temperature value decreases by 1°C (1.8°F) with every 300 m (984 ft) of altitude increase. – Server off: 5–45°C (41–113°F) – Shipping or storage: -40–60°C (-40–140°F) • Maximum altitude: 3050 m (10 000 ft) • Relative humidity (non-condensing): – Operating: ASHRAE class A2: 8%–80%; maximum dew point: 21°C (70°F) – Shipping or storage: 8%–90% • Particulate contamination **Attention:** Airborne particulates and reactive gases acting alone or in combination with other environmental factors such as humidity or temperature might pose a risk to the server. For information about the limits for particulates and gases, see "Particulate contamination" on page 11. Your server complies with ASHRAE class A2 specifications. Depending on the hardware configuration, some server models comply with ASHRAE class A3 and class A4 specifications, see "ASHRAE class compliance information" on page 224.

Particulate contamination

Attention: Airborne particulates (including metal flakes or particles) and reactive gases acting alone or in combination with other environmental factors such as humidity or temperature might pose a risk to the device that is described in this document.

Risks that are posed by the presence of excessive particulate levels or concentrations of harmful gases include damage that might cause the device to malfunction or cease functioning altogether. This specification sets forth limits for particulates and gases that are intended to avoid such damage. The limits must not be viewed or used as definitive limits, because numerous other factors, such as temperature or moisture content of the air, can influence the impact of particulates or environmental corrosives and gaseous contaminant transfer. In the absence of specific limits that are set forth in this document, you must implement practices that maintain particulate and gas levels that are consistent with the protection of human health and safety. If Lenovo determines that the levels of particulates or gases in your environment have caused damage to the device, Lenovo may condition provision of repair or replacement of devices or parts on implementation of appropriate remedial measures to mitigate such environmental contamination. Implementation of such remedial measures is a customer responsibility.

Table 2. Limits for particulates and gases

Contaminant	Limits
Reactive gases	Severity level G1 as per ANSI/ISA 71.04-1985[1]: • The copper reactivity level shall be less than 200 Angstroms per month (Å/month ≈ 0.0035 µg/cm^2-hour weight gain).[2] • The silver reactivity level shall be less than 200 Angstroms per month (Å/month ≈ 0.0035 µg/cm^2-hour weight gain).[3] • The reactive monitoring of gaseous corrosivity must be conducted approximately 5 cm (2 in.) in front of the rack on the air inlet side at one-quarter and three-quarter frame height off the floor or where the air velocity is much higher.
Airborne particulates	Data centers must meet the cleanliness level of ISO 14644-1 class 8. For data centers without airside economizer, the ISO 14644-1 class 8 cleanliness might be met by choosing one of the following filtration methods: • The room air might be continuously filtered with MERV 8 filters. • Air entering a data center might be filtered with MERV 11 or preferably MERV 13 filters. For data centers with airside economizers, the choice of filters to achieve ISO class 8 cleanliness depends on the specific conditions present at that data center. • The deliquescent relative humidity of the particulate contamination should be more than 60% RH.[4] • Data centers must be free of zinc whiskers.[5]

[1] ANSI/ISA-71.04-1985. *Environmental conditions for process measurement and control systems: Airborne contaminants*. Instrument Society of America, Research Triangle Park, North Carolina, U.S.A.

[2] The derivation of the equivalence between the rate of copper corrosion growth in the thickness of the corrosion product in Å/month and the rate of weight gain assumes that Cu_2S and Cu_2O grow in equal proportions.

[3] The derivation of the equivalence between the rate of silver corrosion growth in the thickness of the corrosion product in Å/month and the rate of weight gain assumes that Ag_2S is the only corrosion product.

[4] The deliquescent relative humidity of particulate contamination is the relative humidity at which the dust absorbs enough water to become wet and promote ionic conduction.

[5] Surface debris is randomly collected from 10 areas of the data center on a 1.5 cm diameter disk of sticky electrically conductive tape on a metal stub. If examination of the sticky tape in a scanning electron microscope reveals no zinc whiskers, the data center is considered free of zinc whiskers.

Management options

The XClarity portfolio and other system management offerings described in this section are available to help you manage the servers more conveniently and efficiently.

Overview

Offerings	Description
Lenovo ThinkSystem System Manager	Baseboard management controller (BMC) of the server. You can use the ThinkSystem System Manager to access the BMC and apply BMC management options. **User interface** • Web GUI **Usage and downloads** ThinkSystem System Manager
Lenovo XClarity Administrator	Centralized multi-server management tool. **User interfaces** • Web GUI • Mobile application **Usage and downloads** http://sysmgt.lenovofiles.com/help/topic/com.lenovo.lxca.doc/aug_product_page.html
Lenovo XClarity Energy Manager	Application that can manage and monitor server power and temperature. **User interface** • Web GUI **Usage and downloads** https://datacentersupport.lenovo.com/solutions/lnvo-lxem
Lenovo XClarity Provisioning Manager	Management tool embedded in UEFI, suitable for single-server management contexts. **User interfaces** • Web GUI (accessed through BMC remote console) • Local GUI client **Usage and downloads** https://pubs.lenovo.com/lxpm-overview/ **Important:** Lenovo XClarity Provisioning Manager (LXPM) supported version varies by product. All versions of Lenovo XClarity Provisioning Manager are referred to as Lenovo XClarity Provisioning Manager and LXPM in this document, unless specified otherwise. To see the LXPM version supported by your server, go to https://pubs.lenovo.com/lxpm-overview/.

Offerings	Description
Lenovo XClarity Essentials toolset	Portable and light toolset for server configuration, data collection, and firmware updates. Suitable both for single-server or multi-server management contexts. **User interfaces** • **OneCLI**: Local CLI client • **Bootable Media Creator**: – Local GUI client – Local CLI client **Usage and downloads** https://pubs.lenovo.com/lxce-overview/
Lenovo Capacity Planner	Application that supports power consumption planning for a server or rack. **User interface** • Web GUI **Usage and downloads** https://datacentersupport.lenovo.com/solutions/lnvo-lcp

Functions

Offerings		Functions								
		Multi-system mgmt	**OS de-ploy-ment**	**System config-uration**	**Firm-ware up-date-s**[1]	**Eve-nts/ alert mon-itor-ing**	**Inven-tory/ logs**	**Pow-er mg-mt**	**Data center plan-ning**	**Security man-age-ment**
Lenovo XClarity Administrator		√[2]		√[3]	√[4]	√	√[7]			
Lenovo XClarity Energy Manager		√				√		√		
Lenovo XClarity Essen-tials toolset	OneCLI	√		√[10]	√[4]		√[6, 7]			
	Bootable Media Creator			√[10]	√[5]					
Lenovo XClarity Provisioning Manager			√		√		√[7]			
Lenovo ThinkSystem System Manager				√	√	√	√	√[6]		
Lenovo Capacity Planner									√	

Notes:

1. Most options can be updated through the Lenovo tools. Some options, such as GPU firmware or Omni-Path firmware, require the use of vendor tools.
2. Support managing the server with LDAP binding mode and remote control.

3. For UEFI configuration only.
4. Firmware updates are for BMC firmware, UEFI firmware, and I/O firmware updates.
5. The server UEFI settings for option ROM must be set to **UEFI** to update firmware using Lenovo XClarity Essentials Bootable Media Creator.
6. The server UEFI settings for option ROM must be set to **UEFI** for detailed adapter card information, such as model name and firmware levels, to be displayed in Lenovo XClarity Administrator, Lenovo ThinkSystem System Manager, or Lenovo XClarity Essentials OneCLI.
7. Limited inventory.
8. Available only in Chinese Mainland.
9. It is highly recommended that you check the power summary data for your server using Lenovo Capacity Planner before purchasing any new parts.
10. Support UEFI settings and partial BMC settings.

Chapter 2. Server components

This section provides information to help you locate your server components.

Front view

The front view of the server varies by model.

- “Front views of server models with 2.5-inch drive bays” on page 17
- “Front views of server models with 3.5-inch drive bays” on page 19

Note: Your server might look different from the illustrations in this topic.

Front views of server models with 2.5-inch drive bays

The following illustrations show the front views of server models with 2.5-inch drive bays.

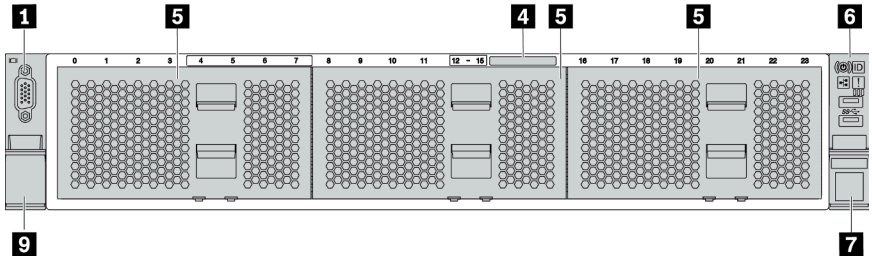

Figure 4. Server model without a backplane

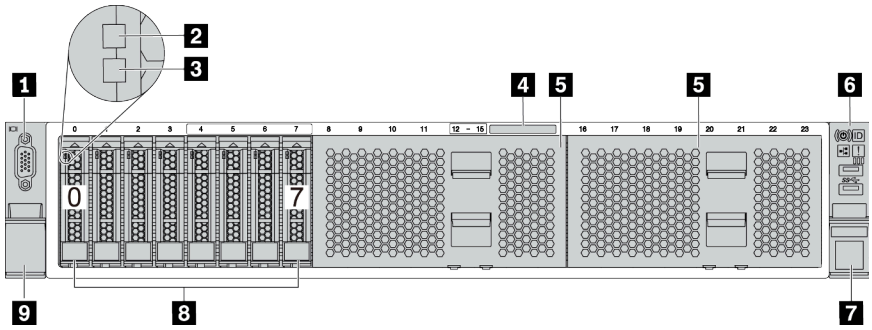

Figure 5. Server model with eight 2.5-inch drive bays

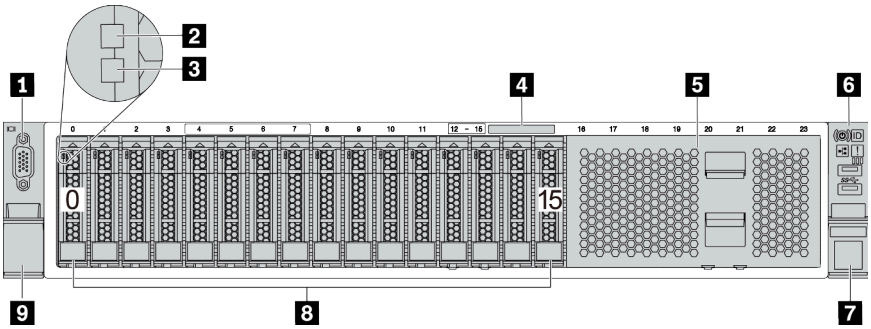

Figure 6. Server model with sixteen 2.5-inch drive bays

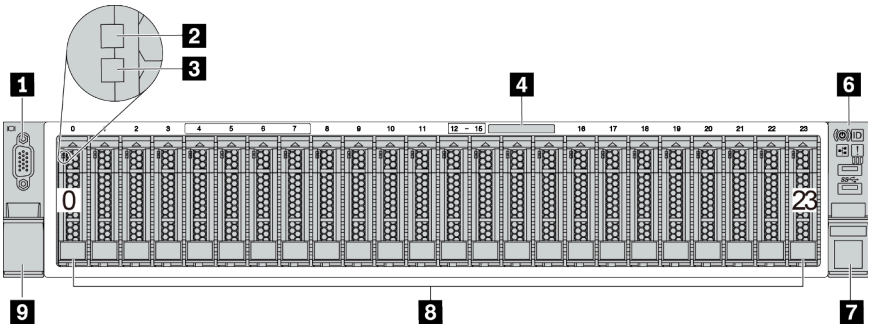

Figure 7. Server model with twenty-four 2.5-inch drive bays

Table 3. Components on the front of server models with 2.5-inch drive bays

Callout	Callout
1 VGA connector (optional)	2 Drive activity LED
3 Drive status LED	4 Pull-out information tab
5 Drive bay filler (8-bay filler)	6 Front I/O assembly
7 Rack latch (right)	8 Drive bays
9 Rack latch (left)	

1 VGA connector (optional)

Used to attach a high-performance monitor, a direct-drive monitor, or other devices that use a VGA connector.

2 Drive activity LED

3 Drive status LED

Each hot-swap drive has two LEDs.

Drive LED	Status	Description
Drive activity LED	Solid green	The drive is powered but not active.
	Blinking green	The drive is active.
Drive status LED	Solid yellow	The drive has an error.

Drive LED	Status	Description
	Blinking yellow (blinking slowly, about one flash per second)	The drive is being rebuilt.
	Blinking yellow (blinking rapidly, about four flashes per second)	The RAID adapter is locating the drive.

4 Pull-out information tab

A label on the tab shows the network information (MAC address and other data) to remotely access the service processor.

5 Drive bay filler

The drive bay filler is used to cover vacant drive bays.

6 Front I/O assembly

For information about the controls, connectors, and status LEDs on the front I/O assembly, see "Front I/O assembly" on page 21.

7 9 Rack latches

If your server is installed in a rack, you can use the rack latches to help you slide the server out of the rack. You also can use the rack latches and screws to secure the server in the rack so that the server cannot slide out, especially in vibration-prone areas. For more information, refer to the *Rack Installation Guide* that comes with your rail kit.

8 Drive bays

The number of the installed drives in your server varies by model. When you install drives, follow the order of the drive bay numbers.

The EMI integrity and cooling of the server are protected by having all drive bays occupied. The vacant drive bays must be occupied by drive bay fillers or drive fillers.

Front views of server models with 3.5-inch drive bays

The following illustrations show the front views of server models with 3.5-inch drive bays.

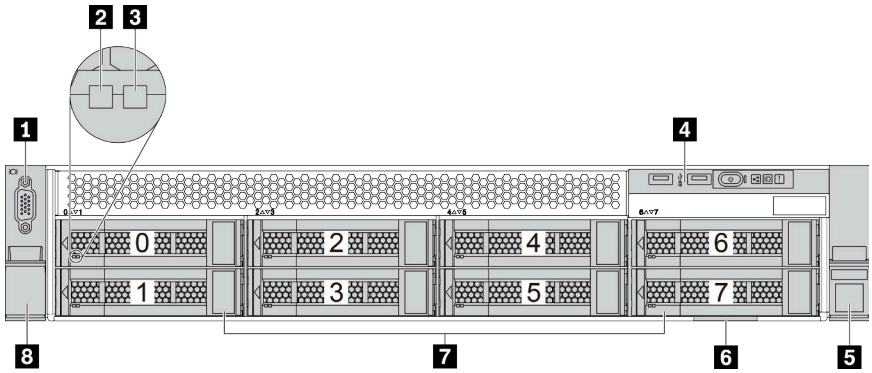

Figure 8. Server model with eight 3.5-inch drive bays

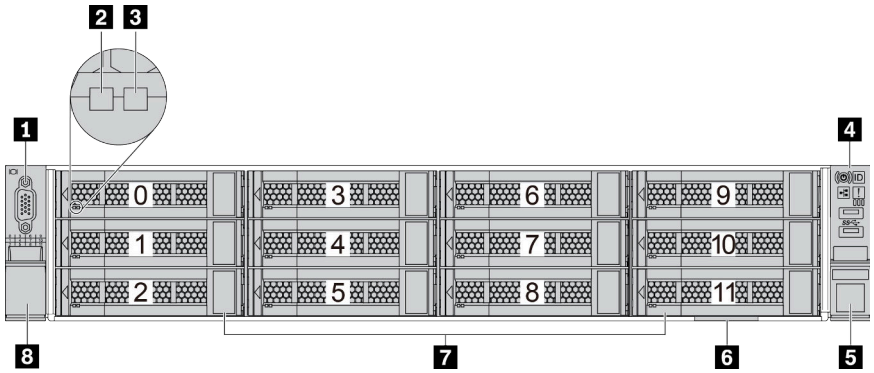

Figure 9. Server model with twelve 3.5-inch drive bays

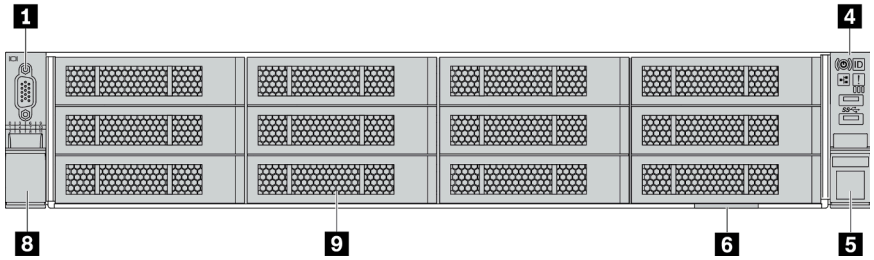

Figure 10. Server model without a backplane

Table 4. Components on the front of server models with 3.5-inch drive bays

Callout	Callout
1 VGA connector (optional)	2 Drive activity LED
3 Drive status LED	4 Front I/O assembly
5 Rack latch (right)	6 Pull-out information tab
7 Drive bays	8 Rack latch (left)
9 Drive bay filler	

1 VGA connector (optional)

Used to attach a high-performance monitor, a direct-drive monitor, or other devices that use a VGA connector.

2 Drive activity LED

3 Drive status LED

Each hot-swap drive has two LEDs.

Drive LED	Status	Description
Drive activity LED	Solid green	The drive is powered but not active.
	Blinking green	The drive is active.
Drive status LED	Solid yellow	The drive has an error.

Drive LED	Status	Description
	Blinking yellow (blinking slowly, about one flash per second)	The drive is being rebuilt.
	Blinking yellow (blinking rapidly, about four flashes per second)	The RAID adapter is locating the drive.

4 Front I/O assembly

For information about the controls, connectors, and status LEDs on the front I/O assembly, see "Front I/O assembly" on page 21.

5 8 Rack latches

If your server is installed in a rack, you can use the rack latches to help you slide the server out of the rack. You also can use the rack latches and screws to secure the server in the rack so that the server cannot slide out, especially in vibration-prone areas. For more information, refer to the *Rack Installation Guide* that comes with your rail kit.

6 Pull-out information tab

A label on the tab shows the network information (MAC address and other data) to remotely access the service processor.

7 Drive bays

The number of the installed drives in your server varies by model. When you install drives, follow the order of the drive bay numbers.

The EMI integrity and cooling of the server are protected by having all drive bays occupied. The vacant drive bays must be occupied by drive bay fillers or drive fillers.

9 Drive bay filler

The drive bay filler is used to cover vacant drive bays.

Front I/O assembly

The front I/O assembly of the server provides controls, connectors, and LEDs. The front I/O assembly varies by model.

The following illustrations show the front I/O assemblies for different server models. To locate the front I/O assembly, see “Front view” on page 17.

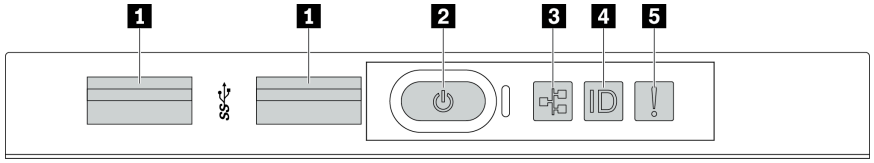

Figure 11. Front I/O assembly for server model with eight 3.5-inch drive bays

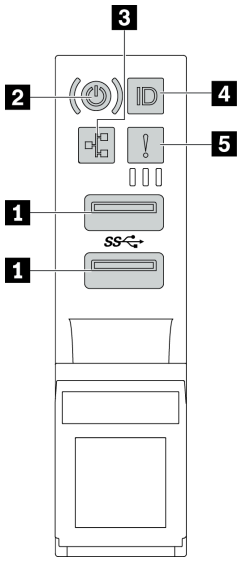

Figure 12. Front I/O assembly for server models with 2.5-inch drive bays or twelve 3.5-inch drive bays

Table 5. Components on the front I/O assembly

Callout	Callout
1 USB 3.1 connectors	2 Power button with power status LED
3 Network activity LED (for OCP 3.0 Ethernet adapter)	4 System ID button with system ID LED
5 System error LED	

1 USB 3.1 connectors

Used to attach a device that requires a USB 2.0 or 3.1 connection, such as a keyboard, a mouse, or a USB storage device.

2 Power button with power status LED

You can press the power button to turn on the server when you finish setting up the server. You also can hold the power button for several seconds to turn off the server if you cannot turn off the server from the operating system. See: “Turn on the server” on page 209. The power status LED helps you to determine the current power status.

Status	Color	Description
Solid on	Green	The server is on and running.
Slow blinking (about one flash per second)	Green	The server is off and is ready to be powered on (standby state).
Off	None	There is no ac power applied to the server.

3 Network activity LED

When an OCP 3.0 Ethernet adapter is installed, the network activity LED on the front I/O assembly helps you identify the network connectivity and activity.

Status	Color	Description
On	Green	The server is connected to a network.
Blinking	Green	The network is connected and active.
Off	None	The server is disconnected from the network.

Note: If no OCP 3.0 Ethernet adapter is installed, this LED is off.

4 System ID button with system ID LED

Use this system ID button and the blue system ID LED to visually locate the server. A system ID LED is also located on the rear of the server. Each time you press the system ID button, the state of both the system ID LEDs changes. The LEDs can be changed to on, blinking, or off.

5 System error LED

The system error LED provides basic diagnostic functions for your server. If the system error LED is lit, one or more LEDs elsewhere in the server might also be lit to direct you to the source of the error.

Status	Color	Description	Action
On	Yellow	An error has been detected on the server. Causes might include but not limited to the following errors: • A fan failure • A memory error • A storage failure • A PCIe device failure • A power supply failure • A CPU error • A system board error	Check the event log to determine the exact cause of the error. Alternatively, follow the light path diagnostics to determine if additional LEDs are lit that will direct you to identify the cause of the error. For information about light path diagnostics, see *Maintenance Manual* for your server.
Off	None	The server is off or the server is on and is working correctly.	None.

Rear view

The rear of the server provides access to several connectors and components.

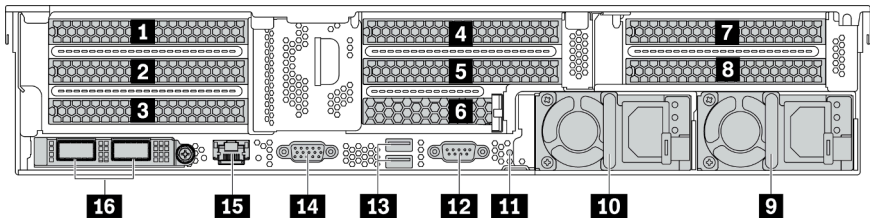

Figure 13. Rear view of server models with eight PCIe slots

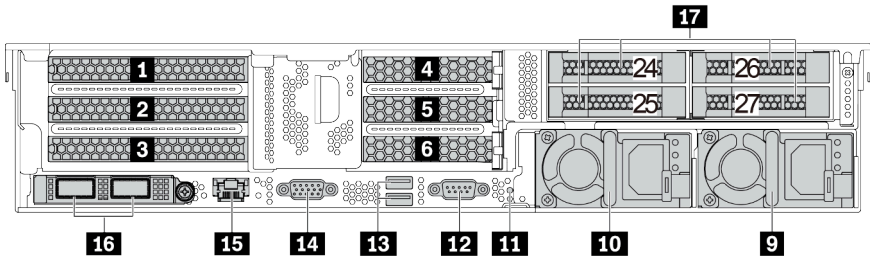

Figure 14. Rear view of server models with 2.5-inch rear drive bays and six PCIe slots

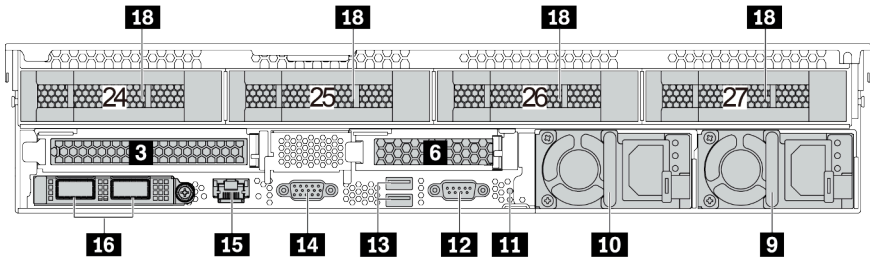

Figure 15. Rear view of server models with 3.5-inch rear drive bays and two PCIe slots

Table 6. Components on the rear of the server

Callout	Callout
1 PCIe slot 1 (on riser 1)	2 PCIe slot 2 (on riser 1)
3 PCIe slot 3 (on riser 1)	4 PCIe slot 4 (on riser 2)
5 PCIe slot 5 (on riser 2)	6 PCIe slot 6 (on riser 2)
7 PCIe slot 7 (on riser 3)	8 PCIe slot 8 (on riser 3)
9 Power supply 2	10 Power supply 1
11 NMI button	12 Serial port
13 USB 3.2 Gen 1 (5 Gbps) connectors (2)	14 VGA connector
15 BMC management network connector	16 Ethernet connectors on the OCP 3.0 Ethernet adapter (optional)
17 2.5-inch rear drive bays (4)	18 3.5-inch rear drive bays (4)

1 2 3 4 5 6 7 8 PCIe slots

You can find the PCIe slot numbers on the rear of the chassis.

PCIe slots 1, 2, and 3 on riser 1:

There are four types of riser cards that can be installed in riser 1 slot.

FHFL: full-height, full-length; FHHL: full-height, half-length

Riser card 1	PCIe slots
Type 1*	• Slot 1: PCIe x16, FHFL • Slot 2: PCIe x16, FHFL • Slot 3: not available
Type 2*	• Slot 1: PCIe x16, FHFL • Slot 2: PCIe x16 (x8, x4, x1), FHFL • Slot 3: PCIe x16 (x8, x4, x1), FHHL
Type 3	• Slot 1: PCIe x16, FHFL • Slot 2: not available • Slot 3: not available
Type 4	• Slot 3: PCIe x16, FHHL **Note:** This riser card is for configuration with 3.5-inch rear bays.

Notes:

- Riser card 1 of Type 1 or Type 2 needs to be connected to the system board. For detailed cable routing, see "Riser cards" on page 46.

PCIe slots 4, 5, and 6 on riser 2:

There are three types of riser cards that can be installed in riser 2 slot.

FHFL: full-height, full-length; LP: low-profile

Riser card 2	PCIe slots
Type 1	• Slot 4: PCIe x16, FHFL or LP • Slot 5: PCIe x16, FHFL or LP • Slot 6: not available
Type 2	• Slot 4: PCIe x16, FHFL or LP • Slot 5: PCIe x16 (x8, x4, x1), FHFL or LP • Slot 6: PCIe x16 (x8, x4, x1), LP
Type 3	• Slot 6: PCIe x16, LP **Note:** This riser card is for configuration with 3.5-inch rear bays.

PCIe slots 7 and 8 on riser 3:

The server supports riser 3 if no rear bay is installed. The following two types of riser cards are supported:

FHFL: full-height, full-length

Riser card 3	PCIe slots
Type 1	• Slot 7: PCIe x16 (x8, x4, x1), FHFL • Slot 8: PCIe x16 (x8, x4, x1), FHFL
Type 2	• Slot 7: PCIe x16, FHFL • Slot 8: PCIe x16, FHFL

Notes:

- Riser card 3 of Type 1 or Type 2 needs to be connected to the system board. For detailed cable routing, see “Riser cards” on page 46.

9 10 Power supplies

The hot-swap redundant power supplies help you avoid significant interruption to the operation of the system when a power supply fails. You can purchase a power supply option from Lenovo and install the power supply to provide power redundancy without turning off the server.

On each power supply, there are three status LEDs near the power cord connector. For information about the status LEDs, see “Rear view LEDs” on page 27.

11 NMI button

Press this button to force a nonmaskable interrupt (NMI) to the processor. By this way, you can blue screen the server and take a memory dump. You might have to use a pen or the end of a straightened paper clip to press the button.

12 Serial port

Used to attach a device that requires serial connection for data transferring.

13 USB 3.2 Gen 1 (5 Gbps) connectors (2)

Used to attach a device that requires a USB 2.0 or 3.1 connection, such as a keyboard, a mouse, or a USB storage device.

14 VGA connector

Used to attach a high-performance monitor, a direct-drive monitor, or other devices that use a VGA connector.

15 BMC management network connector

Used to attach an Ethernet cable to manage the system using Lenovo ThinkSystem System Manager.

16 Ethernet connectors on the OCP 3.0 Ethernet adapter (optional)

Figure 16. OCP module (two connectors)

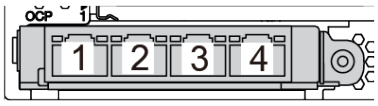

Figure 17. OCP module (four connectors)

Notes:
- The OCP 3.0 Ethernet adapter provides two or four extra Ethernet connectors for network connections.
- Any of the connectors (connector 1 by default) on the OCP module can function as a shared management connector.

17 2.5-inch rear drive bays (4)

Used to install up to four 2.5-inch hot-swap drives on the rear of the server. The 2.5-inch rear drive bays are available on some models.

The number of the installed drives in your server varies by model. The EMI integrity and cooling of the server are protected by having all drive bays occupied. The vacant drive bays must be occupied by drive bay fillers or drive fillers.

18 3.5-inch rear drive bays (4)

Used to install up to four 3.5-inch hot-swap drives on the rear of the server. The 3.5-inch rear drive bays are available on some models.

The number of the installed drives in your server varies by model. The EMI integrity and cooling of the server are protected by having all drive bays occupied. The vacant drive bays must be occupied by drive bay fillers or drive fillers.

Rear view LEDs

The illustration in this section shows the LEDs on the rear of the server.

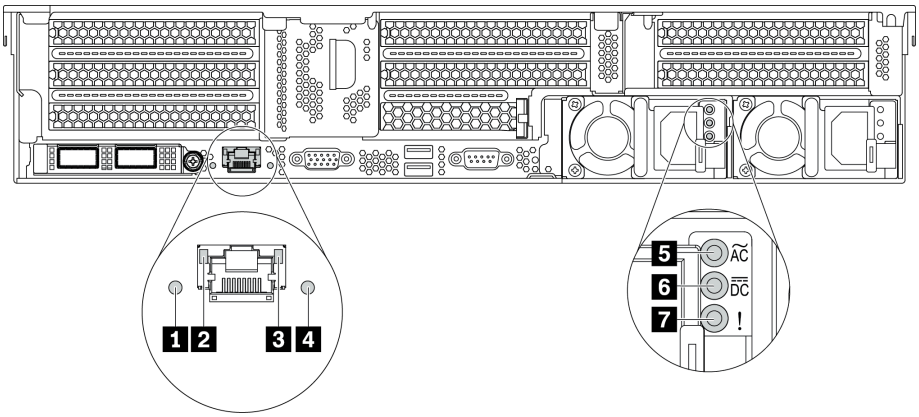

Figure 18. Rear view LEDs of the server

Table 7. LEDs on the rear of the server

Callout	Callout
1 System error LED	2 Ethernet link LED
3 Ethernet activity LED	4 System ID LED
5 Power input LED	6 Power output LED
7 Power supply error LED	

1 System error LED

The system error LED provides basic diagnostic functions for your server. If the system error LED is lit, one or more LEDs elsewhere in the server might also be lit to direct you to the source of the error. For more information, see "Front I/O assembly" on page 21.

2 3 Ethernet status LEDs

The BMC management connector has two status LEDs.

Ethernet status LED	Color	Status	Description
2 Ethernet link LED	Green	On	Network link is established.
	None	Off	Network link is disconnected.
3 Ethernet activity LED	Green	Blinking	Network link is connected and active.
	None	Off	The server is disconnected from a LAN.

4 System ID LED

The blue system ID LED helps you to visually locate the server. A system ID LED is also located on the front of the server. Each time you press the system ID button, the state of both the system ID LEDs changes. The LEDs can be changed to on, blinking, or off.

5 Power input LED

6 Power output LED

7 Power supply error LED

Each hot-swap power supply has three status LEDs.

LED	Description
5 Power input LED	• Green: The power supply is connected to the ac power source. • Off: The power supply is disconnected from the ac power source or a power problem occurs.
6 Power output LED	• Green: The server is on and the power supply is working normally. • Blinking green: The power supply is in zero-output mode (standby). When the server power load is low, one of the installed power supplies enters into the standby state while the other one delivers entire load. When the power load increases, the standby power supply will switch to active state to provide sufficient power to the server. To disable zero-output mode, start the Setup utility, go to **Advanced** → **Power** → **Zero Output** and select **Disable**. If you disable zero-output mode, both power supplies will be in the active state. • Off: The server is powered off, or the power supply is not working properly. If the server is powered on but the power output LED is off, replace the power supply.
7 Power supply error LED	• Yellow: The power supply has failed. To resolve the issue, replace the power supply. • Off: The power supply is working normally.

System board components

The illustration in this section shows the component locations on the system board.

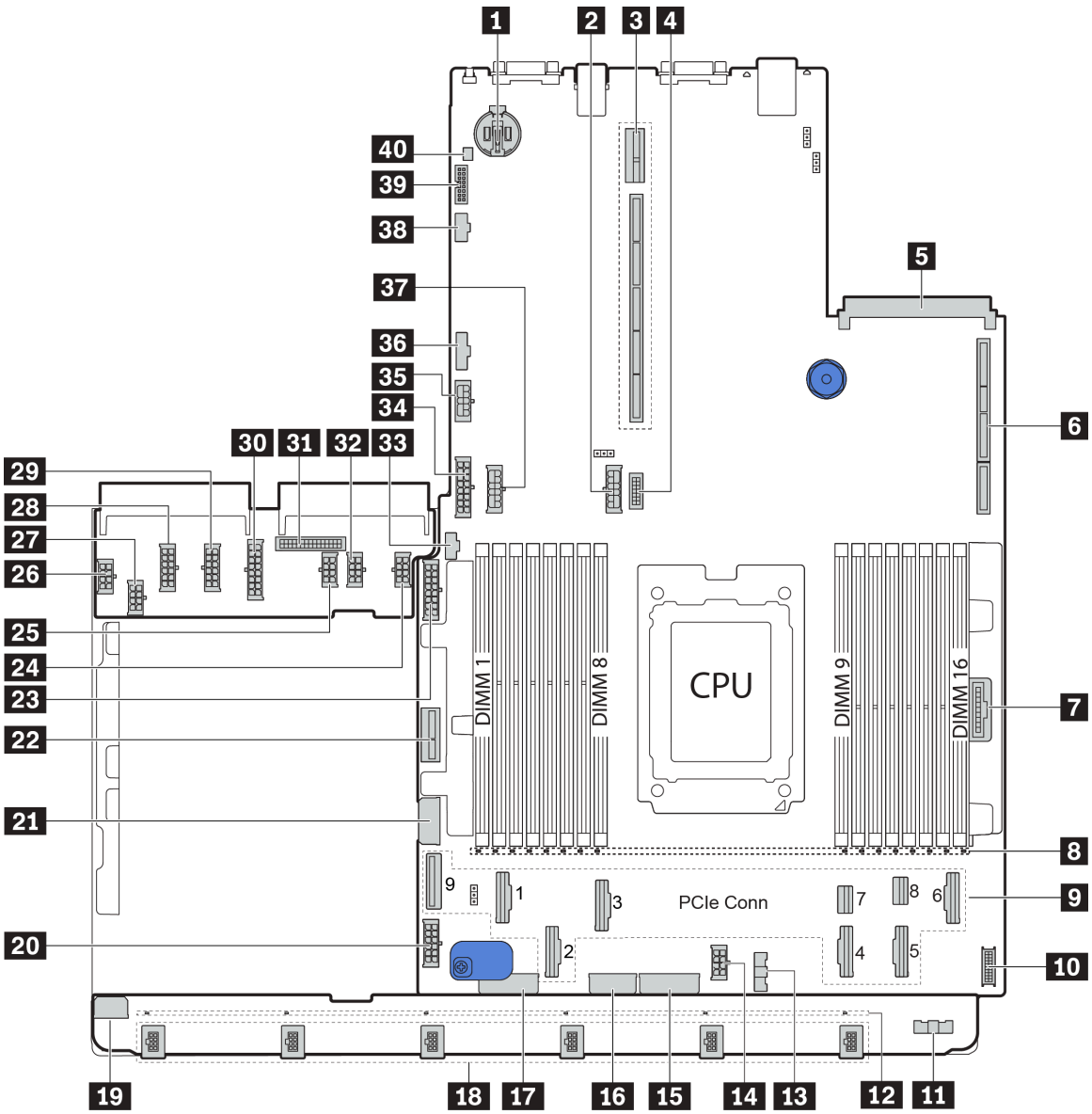

Figure 19. System board components

1 CMOS battery	2 Rear backplane power connector
3 Riser 2 slot	4 Front VGA connector
5 OCP Ethernet adapter slot	6 Riser 1 slot
7 Front panel connector	8 DIMM 1-16 error LEDs
9 PCIe connectors*	10 Front USB connector
11 Fan board sideband connector (connect to 13)	12 Fan 1-6 error LEDs
13 Fan board sideband connector (connect to 11)	14 CPU power connector (connect to 27)
15 Front backplane power connector*	16 System power connector 3 (connect to 28)
17 Front backplane power connector*	18 Fan 1-6 connectors
19 Fan board power connector (connect to 26)	20 System board power connector 2 (connect to 29)

21 Middle 2.5-inch-drive backplane 1 power connector	22 Internal riser power connector
23 Front 2.5-inch-drive backplane 1 power connector	24 GPU power connector 1
25 GPU power connector 3	26 Fan board power connector (connect to 19)
27 CPU power connector (connect to 14)	28 System power connector 3 (connect to 16)
29 System power connector 2 (connect to 20)	30 System power connector 1 (connect to 34)
31 PIB sideband connector (connect to 36)	32 GPU power connector 2
33 M.2 sideband connector	34 System power connector 1 (connect to 30)
35 Riser 3 power connector	36 PIB sideband connector (connect to 31)
37 Middle backplane power connector*	38 Riser 3 sideband connector
39 TPM adapter connector (for Chinese Mainland only)	40 Intrusion switch connector

Notes:

- 9: The PCIe connectors are connected to NVMe backplanes, M.2 adapter, riser cards, or SAS/SATA backplanes. For detailed information, see "Internal cable routing" on page 37.
- 15:
  - Front 2.5-inch-drive backplane 3 power connector when three front 2.5-inch-drive backplanes are installed.
  - Front 3.5-inch-drive backplane power connector 2 when the 12 x 3.5-inch-drive backplane is installed.
- 17:
  - Front 2.5-inch-drive backplane 2 power connector when two front 2.5-inch-drive backplanes are installed.
  - Front 3.5-inch-drive backplane power connector 1 when the 12 x 3.5-inch-drive backplane or 8 x 3.5-inch-drive backplane is installed.
- 37:
  - Middle 2.5-inch-drive backplane 2 power connector when the middle 2.5-inch-drive cage is installed.
  - Middle 3.5-inch-drive backplane power connector when the middle 3.5-inch-drive cage is installed.

System board LEDs

The illustration in this section shows the LEDs on the system board.

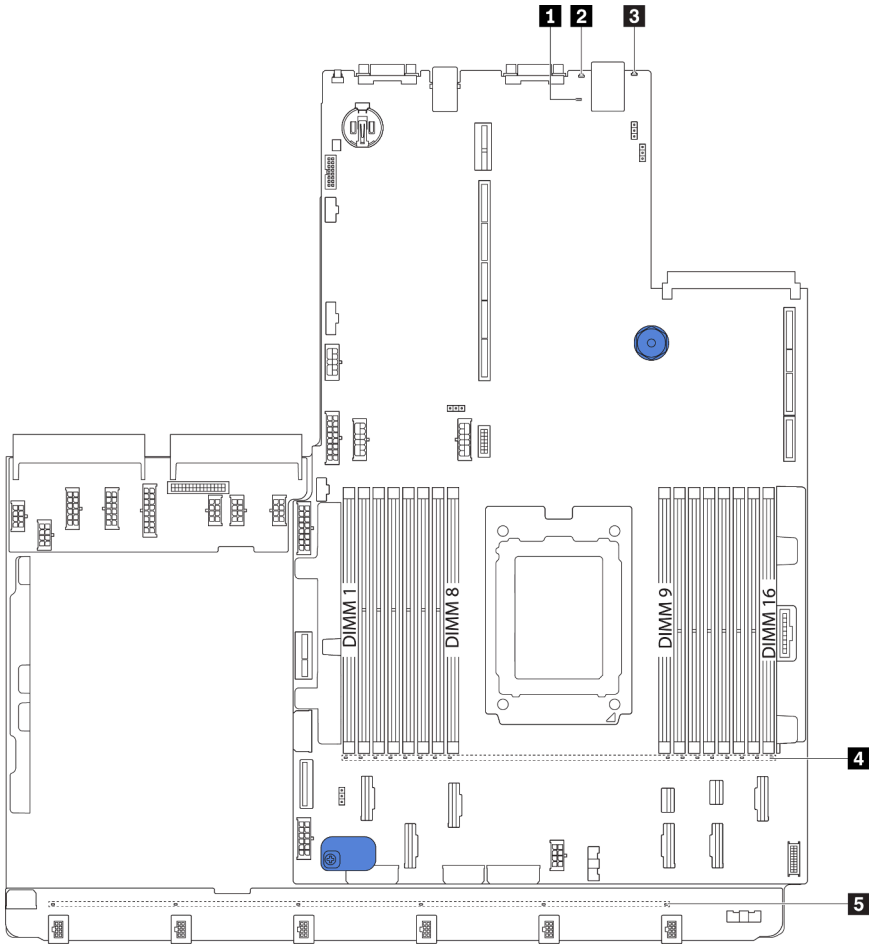

Figure 20. System board LEDs

Table 8. LEDs on the system board

Callout	Callout
1 BMC heart beat LED	2 System ID LED
3 System error LED	4 DIMM error LEDs (16)
5 Fan error LEDs (6)	

1 BMC heart beat LED

The BMC heart beat LED helps you identify the BMC status.

Status	Color	Description
On	Green	The BMC is not alive.
Blinking	Green	The BMC is alive.
Off	None	The BMC is not alive.

2 System ID LED

The blue system ID LED helps you to visually locate the server. A system ID LED is also located on the front of the server. Each time you press the system ID button, the state of both the system ID LEDs changes. The LEDs can be changed to on, blinking, or off.

3 System error LED

When this yellow LED is lit, one or more LEDs elsewhere in the server might also be lit to direct you to the source of the error. For more information, see "Front I/O assembly" on page 21.

4 DIMM error LEDs

When a DIMM error LED is lit, it indicates that the corresponding memory module has failed.

5 Fan error LEDs

When a fan error LED is lit, it indicates that the corresponding system fan is operating slowly or has failed.

Parts list

Use the parts list to identify each of the components that are available for your server.

For more information about ordering the parts shown in Figure 21 "Server components" on page 33:

http://datacentersupport.lenovo.com/products/servers/thinksystem/sr655/7y00/parts

Note: Depending on the model, your server might look slightly different from the illustration. Some parts are available only on some models.

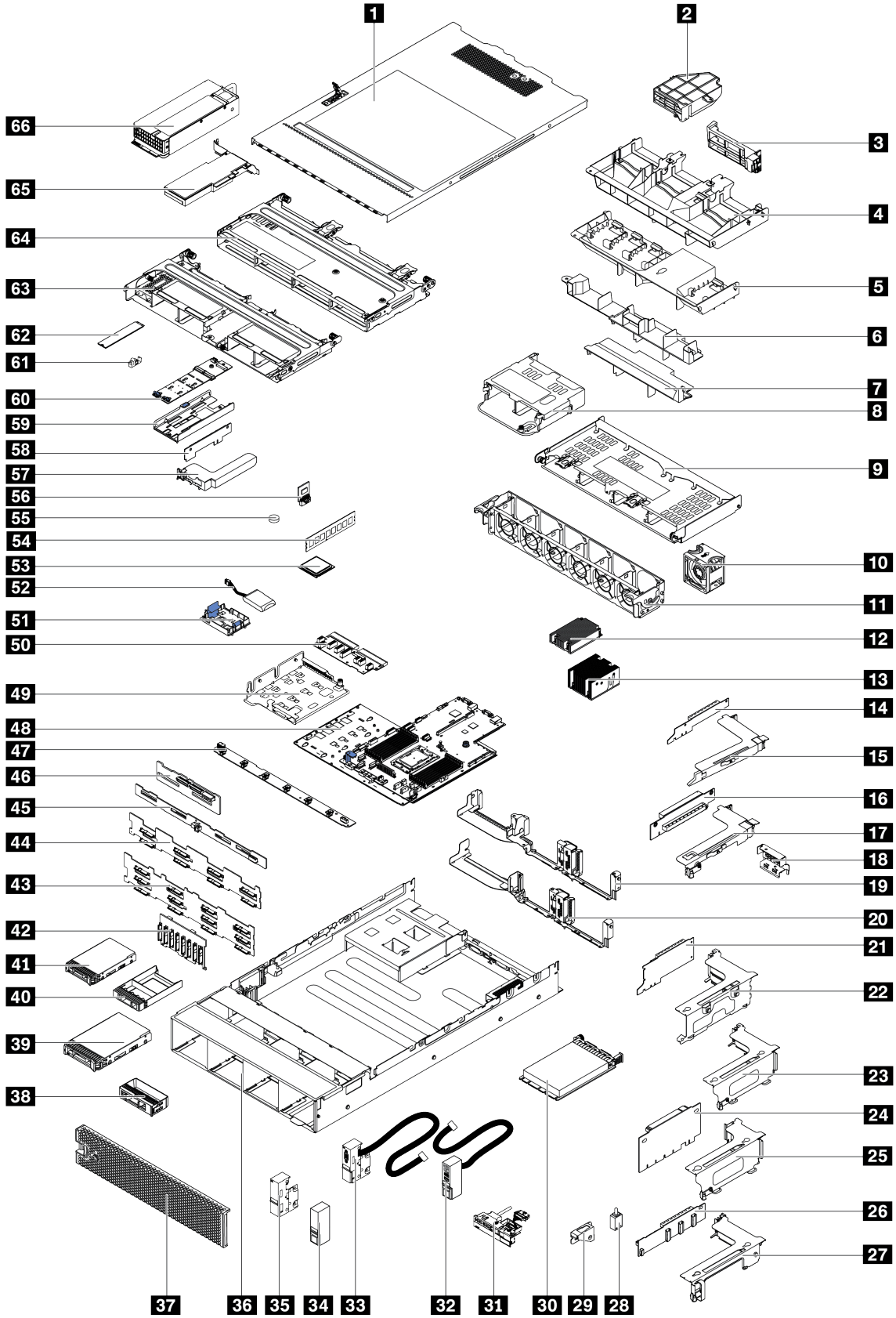

Figure 21. Server components

The parts listed in the following table are identified as one of the following:

- **Tier 1 customer replaceable unit (CRU):** Replacement of Tier 1 CRUs is your responsibility. If Lenovo installs a Tier 1 CRU at your request with no service agreement, you will be charged for the installation.
- **Tier 2 customer replaceable unit (CRU):** You may install a Tier 2 CRU yourself or request Lenovo to install it, at no additional charge, under the type of warranty service that is designated for your server.
- **Field replaceable unit (FRU):** FRUs must be installed only by trained service technicians.
- **Consumable and Structural parts:** Purchase and replacement of consumable and structural parts is your responsibility. If Lenovo acquires or installs a structural component at your request, you will be charged for the service.

Table 9. Parts list

Index	Description	Tier 1 CRU	Tier 2 CRU	FRU	Consumable and Structural parts
For more information about ordering the parts shown in Figure 21 "Server components" on page 33: http://datacentersupport.lenovo.com/products/servers/thinksystem/sr655/7y00/parts It is highly recommended that you check the power summary data for your server using Lenovo Capacity Planner before purchasing any new parts.					
1	Top cover	√			
2	Add-on GPU air baffle, single-wide				√
3	Add-on GPU air baffle, double-wide				√
4	Air baffle for GPU				√
5	Standard air baffle				√
6	Air baffle for middle 2.5-inch drive cage				√
7	Air baffle for middle 3.5-inch drive cage				√
8	Rear 2.5-inch drive cage				√
9	Rear 3.5-inch drive cage				√
10	Fan module	√			
11	Fan cage				√
12	1U processor heat sink			√	
13	2U processor heat sink			√	
14	x16 PCIe riser card 1 (1U)	√			
15	Riser 1 bracket, FH	√			
16	x16 PCIe riser card 2 (1U)	√			
17	Riser 2 bracket, LP	√			
18	Rear wall bracket, 2 x PCIe slots with 3.5-inch drive cage				√
19	Rear wall bracket, 8 x PCIe slots	√			
20	Rear wall bracket, 6 x PCIe slots with 2.5-inch drive cage	√			

Table 9. Parts list (continued)

Index	Description	Tier 1 CRU	Tier 2 CRU	FRU	Consumable and Structural parts
21	x16/x8/x8 PCIe riser card 1	√			
21	x16/x16 PCIe riser card 1	√			
21	x16 PCIe riser card 1	√			
22	Riser 1 bracket, 3FH	√			
23	Riser 2 bracket, 2FH+1LP	√			
24	x16/x16 PCIe riser card 2	√			
24	x16/x8/x8 PCIe riser card 2	√			
25	Riser 2 bracket, 3LP	√			
26	x16/x16 riser card 3	√			
26	x8/x8 PCIe riser card 3	√			
27	Riser 3 bracket, 2FH	√			
28	Intrusion switch	√			
29	Intrusion switch bracket	√			
30	OCP 3.0 Ethernet adapter	√			
31	Front I/O assembly, 8 x 3.5-inch front drive bays	√			
32	Right rack latch, with front I/O assembly				√
33	Left rack latch, with VGA connector	√			
34	Right rack latch, without front I/O assembly				√
35	Left rack latch, without VGA connector	√			
36	Chassis			√	
37	Security bezel	√			
38	Filler, 3.5-inch drive				√
39	Storage drive, 3.5-inch, hot-swap	√			
40	Filler, 2.5-inch drive				√
41	Storage drive, 2.5-inch, hot-swap	√			
42	Backplane, 8 x 2.5-inch hot-swap drives	√			
43	Backplane, 12 x 3.5-inch hot-swap drives	√			
44	Backplane, 8 x 3.5-inch hot-swap drives	√			
45	Backplane, 4 x 3.5 hot-swap drives	√			
46	Backplane, 4 x 2.5 hot-swap drives	√			
47	Fan board			√	

Table 9. Parts list (continued)

Index	Description	Tier 1 CRU	Tier 2 CRU	FRU	Consumable and Structural parts
48	System board			√	
49	M.2/riser support bracket	√			
50	PIB board			√	
51	RAID super capacitor holder	√			
52	RAID super capacitor module	√			
53	Processor			√	
54	Memory module	√			
55	CMOS battery				√
56	TPM module (for Chinese Mainland only)			√	
57	Internal riser bracket	√			
58	Internal riser card	√			
59	M.2 bracket	√			
60	M.2 adapter	√			
61	M.2 retainer clip	√			
62	M.2 drive	√			
63	Middle 2.5-inch drive cage				√
64	Middle 3.5-inch drive cage				√
65	PCIe adapter	√			
66	Power supply	√			

Power cords

Several power cords are available, depending on the country and region where the server is installed.

To view the power cords that are available for the server:

1. Go to:

   http://dcsc.lenovo.com/#/
2. Click **Preconfigured Model** or **Configure to order**.
3. Enter the machine type and model for your server to display the configurator page.
4. Click **Power → Power Cables** to see all line cords.

Notes:

- For your safety, a power cord with a grounded attachment plug is provided to use with this product. To avoid electrical shock, always use the power cord and plug with a properly grounded outlet.
- Power cords for this product that are used in the United States and Canada are listed by Underwriter's Laboratories (UL) and certified by the Canadian Standards Association (CSA).

- For units intended to be operated at 115 volts: Use a UL-listed and CSA-certified cord set consisting of a minimum 18 AWG, Type SVT or SJT, three-conductor cord, a maximum of 15 feet in length and a parallel blade, grounding-type attachment plug rated 15 amperes, 125 volts.
- For units intended to be operated at 230 volts (U.S. use): Use a UL-listed and CSA-certified cord set consisting of a minimum 18 AWG, Type SVT or SJT, three-conductor cord, a maximum of 15 feet in length and a tandem blade, grounding-type attachment plug rated 15 amperes, 250 volts.
- For units intended to be operated at 230 volts (outside the U.S.): Use a cord set with a grounding-type attachment plug. The cord set should have the appropriate safety approvals for the country in which the equipment will be installed.
- Power cords for a specific country or region are usually available only in that country or region.

Internal cable routing

Some of the components in the server have internal cables and cable connectors.

To connect cables, observe the following guidelines:

- Turn off the server before you connect or disconnect any internal cables.
- See the documentation that comes with any external devices for additional cabling instructions. It might be easier for you to route cables before you connect the devices to the server.
- Cable identifiers of some cables are printed on the cables that come with the server and optional devices. Use these identifiers to connect the cables to the correct connectors.
- Ensure that the cable is not pinched and does not cover any connectors or obstruct any components on the system board.
- Ensure that the relevant cables pass through the cable clips.

Note: Disengage all latches, release tabs, or locks on cable connectors when you disconnect cables from the system board. Failing to release them before removing the cables will damage the cable sockets on the system board, which are fragile. Any damage to the cable sockets might require replacing the system board.

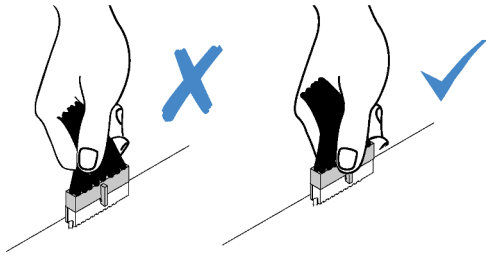

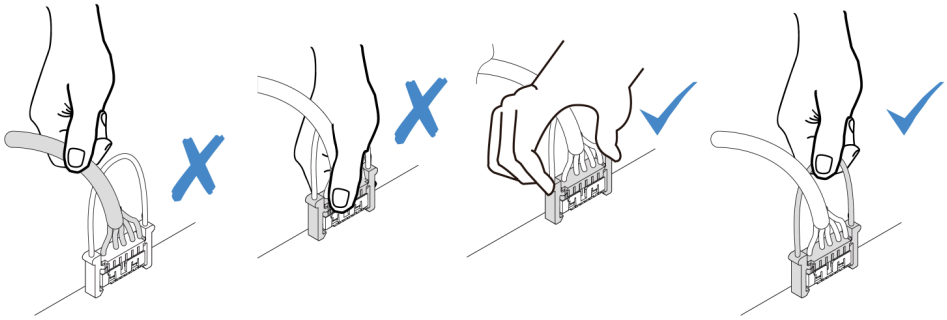

VGA connector

Use the section to understand the cable routing for the VGA connector on the left rack latch.

Note: The VGA connector is available on some models.

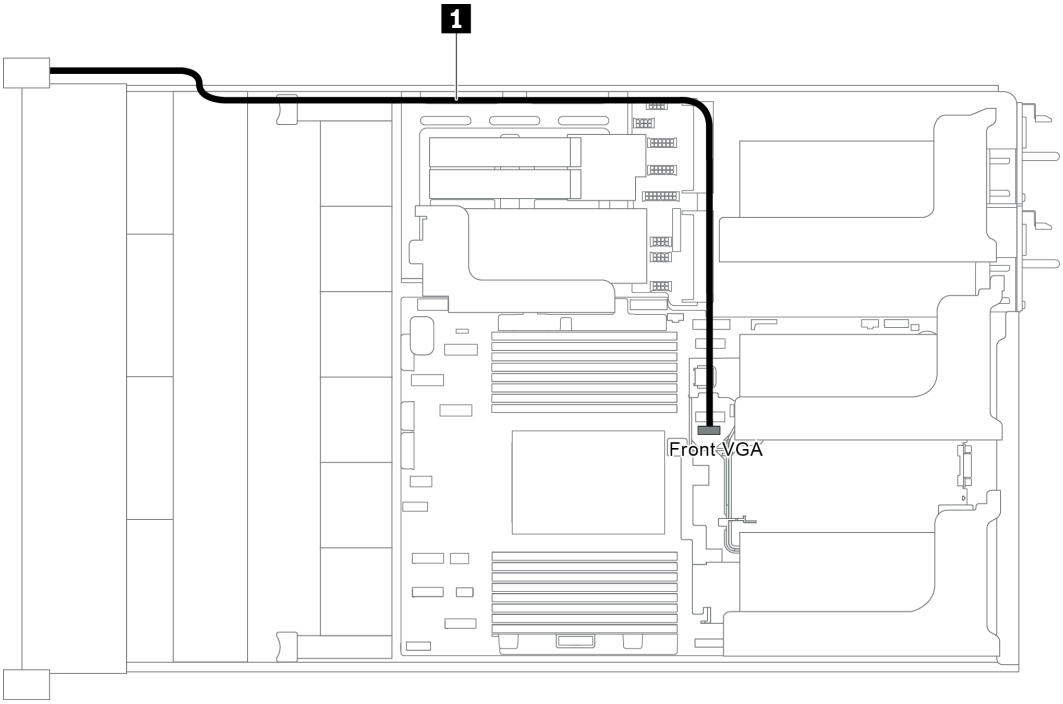

Figure 22. VGA connector cable routing

From	To
VGA cable on the left rack latch	Front VGA connector on the system board

Front I/O assembly

Use the section to understand the cable routing for the front I/O assembly.

- "Front I/O assembly on the chassis" on page 39
- "Front I/O assembly on the right rack latch" on page 40

Front I/O assembly on the chassis

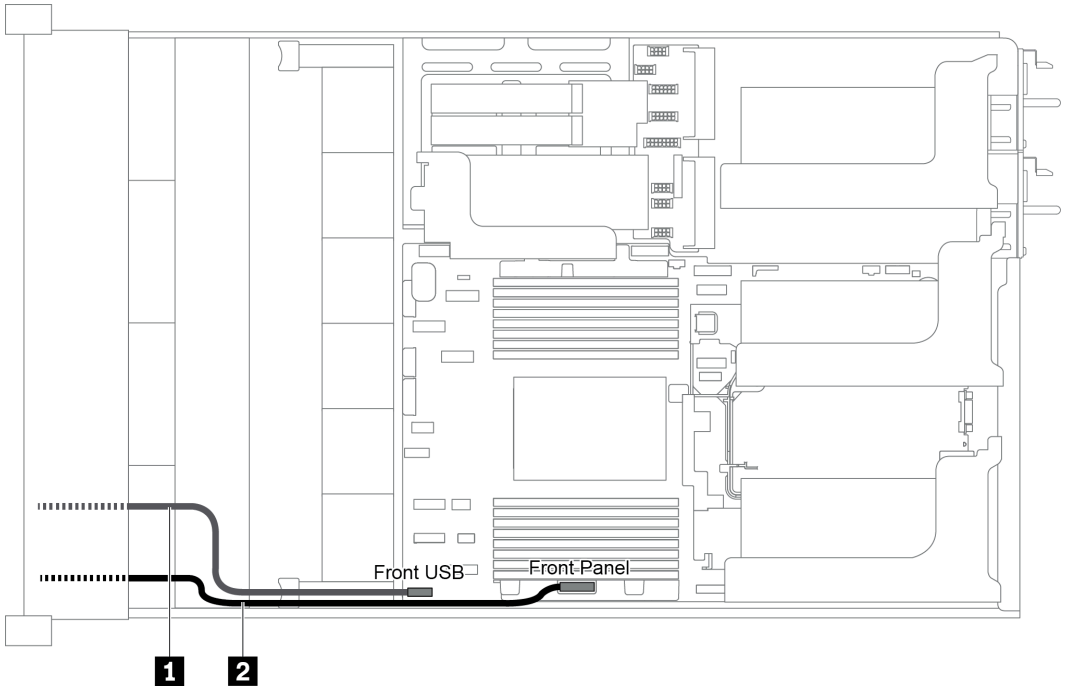

Figure 23. Cable routing for the front I/O assembly on the chassis

From	To
1 Front USB cable	Front USB connector on the system board
2 Front panel cable	Front panel connector on the system board

Front I/O assembly on the right rack latch

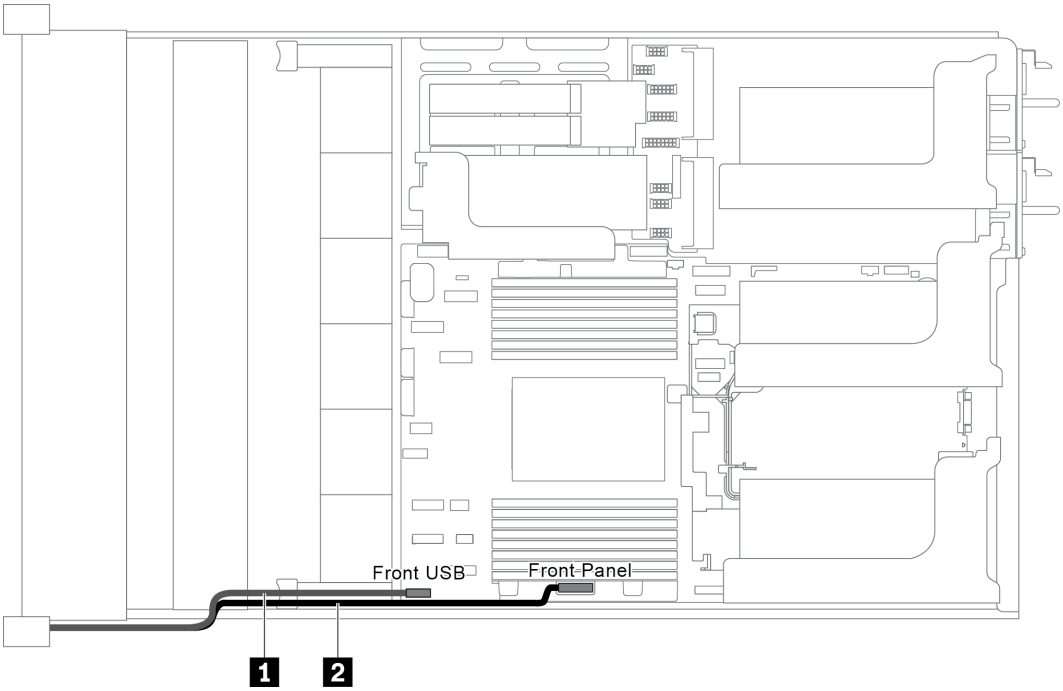

Figure 24. Cable routing for the front I/O assembly on the right rack latch

From	To
Front-I/O-assembly cable	Front USB connector and front panel connector on the system board

M.2 drives

This section provides cable routing information for the M.2 drives.

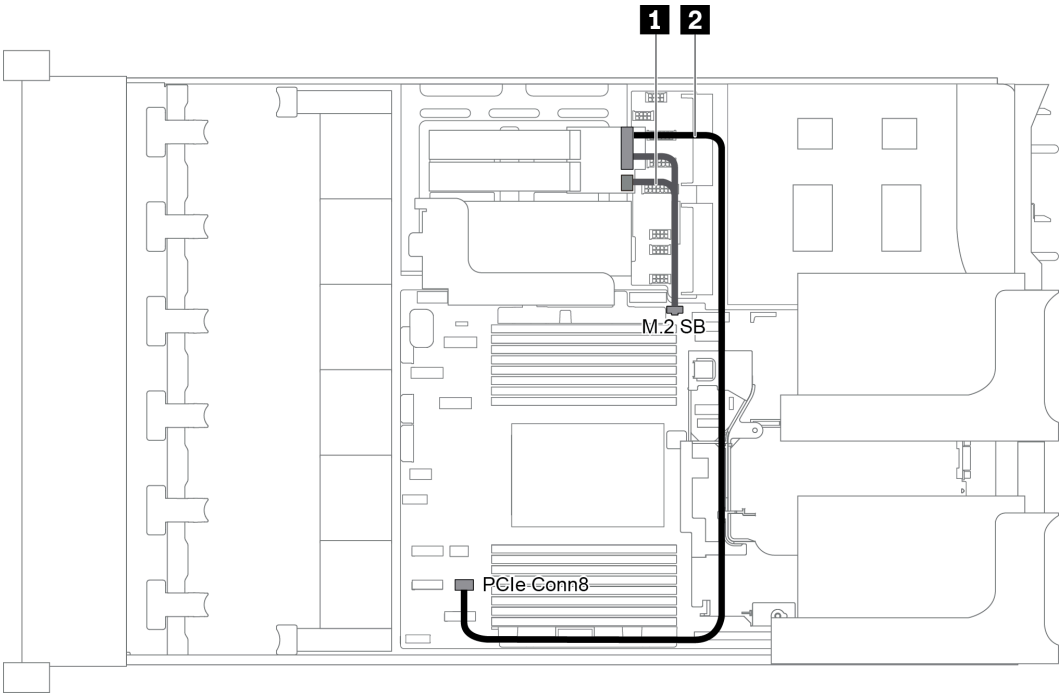

Figure 25. Cable routing for M.2 drives

From	To
1 M.2 sideband cable	M.2 sideband connector on the system board
2 Power cable	PCIe connector 8 on the system board

RAID super capacitor modules

This section provides cable routing information for RAID super capacitor modules.

The cable routing depends on the locations of RAID super capacitor modules:

- “Cable routing for RAID super capacitor modules on the standard air baffle” on page 42
- “Cable routing for RAID super capacitor modules on the middle drive cage” on page 43
- “Cable routing for RAID super capacitor modules on the internal riser kit” on page 44

Note: An extension cable is provided for each RAID super capacitor module for connection.

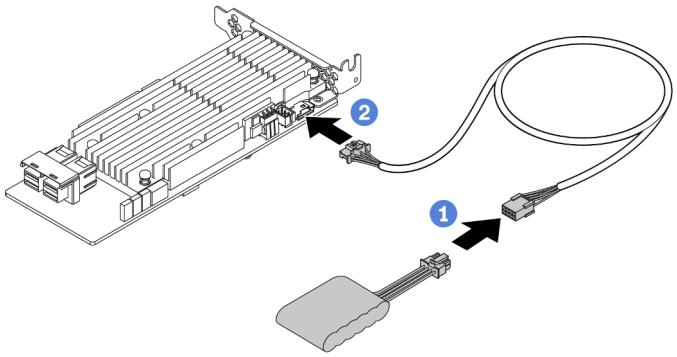

Figure 26. Connecting the RAID super capacitor module to the RAID adapter

Cable routing for RAID super capacitor modules on the standard air baffle

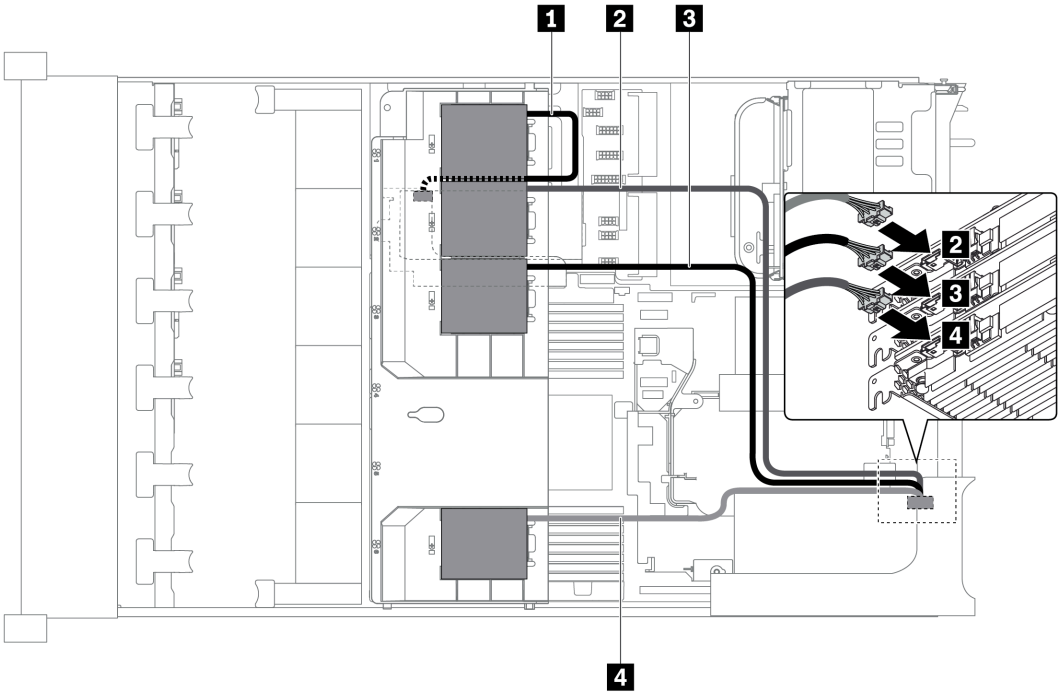

Figure 27. Cable routing for RAID super capacitor modules on the standard air baffle

From	To
1 Super capacitor 1 cable	Super capacitor connector on the RAID adapter on the internal riser card
2 Super capacitor 2 cable	Super capacitor connector on the RAID adapter in slot 1 on riser card 1
3 Super capacitor 3 cable	Super capacitor connector on the RAID adapter in slot 2 on riser card 1
4 Super capacitor 4 cable	Super capacitor connector on the RAID adapter in slot 3 on riser card 1

Cable routing for RAID super capacitor modules on the middle drive cage

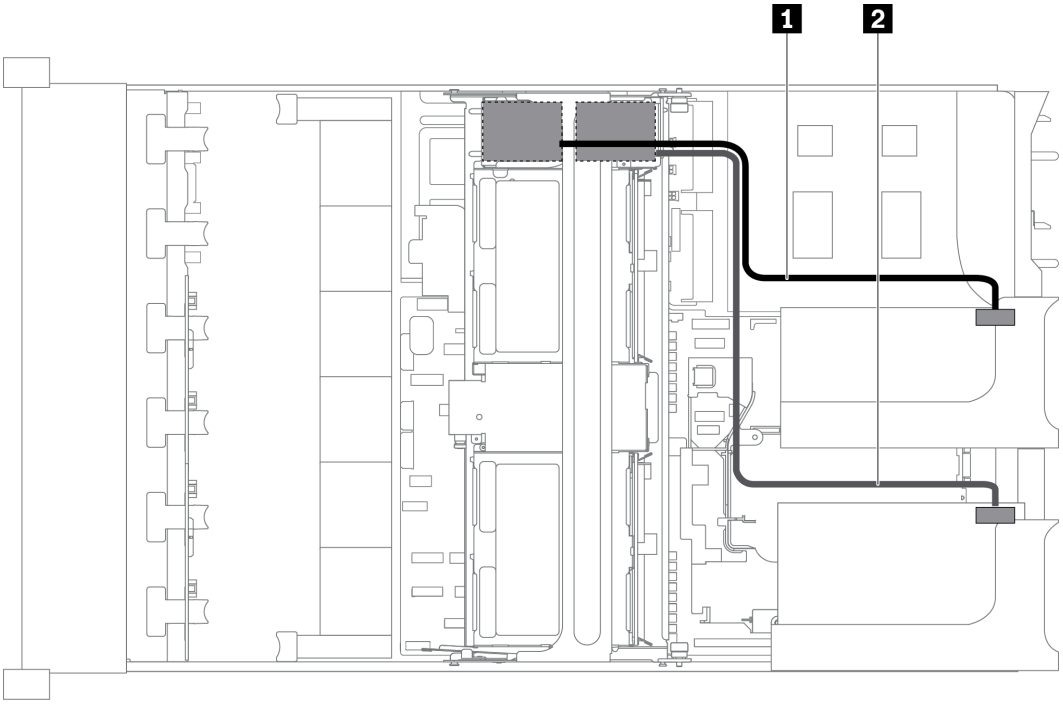

Figure 28. Cable routing for RAID super capacitor modules on the middle drive cage

From	To
1 Super capacitor 1 cable	Super capacitor connector on the RAID adapter on riser card 1
2 Super capacitor 2 cable	Super capacitor connector on the RAID adapter on riser card 2

Cable routing for RAID super capacitor modules on the internal riser kit

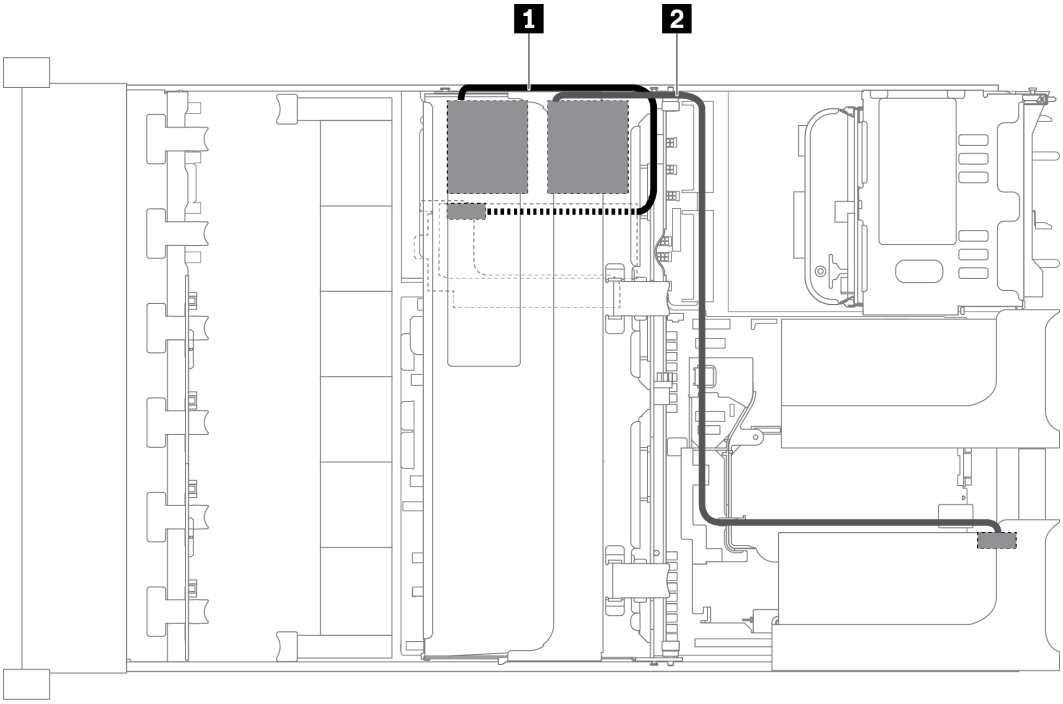

Figure 29. Cable routing for RAID super capacitor modules on the internal riser kit

From	To
1 Super capacitor 1 cable	Super capacitor connector on the RAID adapter on the internal riser card
2 Super capacitor 2 cable	Super capacitor connector on the RAID adapter on riser card 1

GPU adapters

This section provides cable routing information for the GPU adapter.

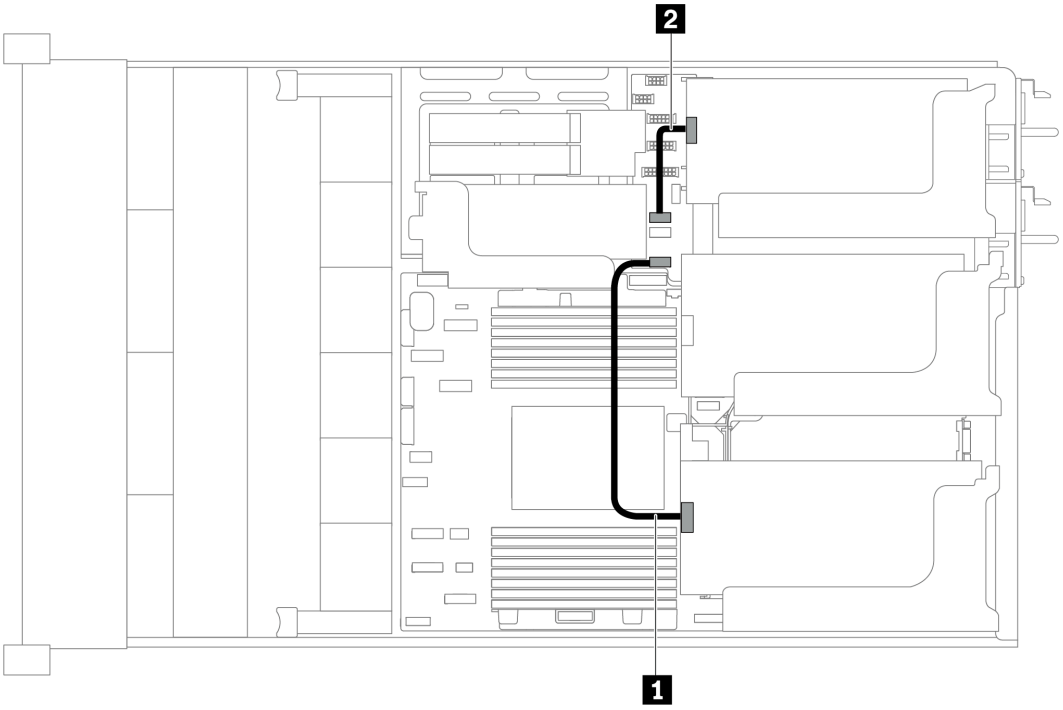

Figure 30. Cable routing for GPU adapters

From	To
1 GPU adapter on riser 1	GPU 1 power connector on the system board
2 GPU adapter on riser 3	GPU 2 power connector on the system board

Intrusion switch

Use the section to understand the cable routing for the intrusion switch on the riser 2 bracket.

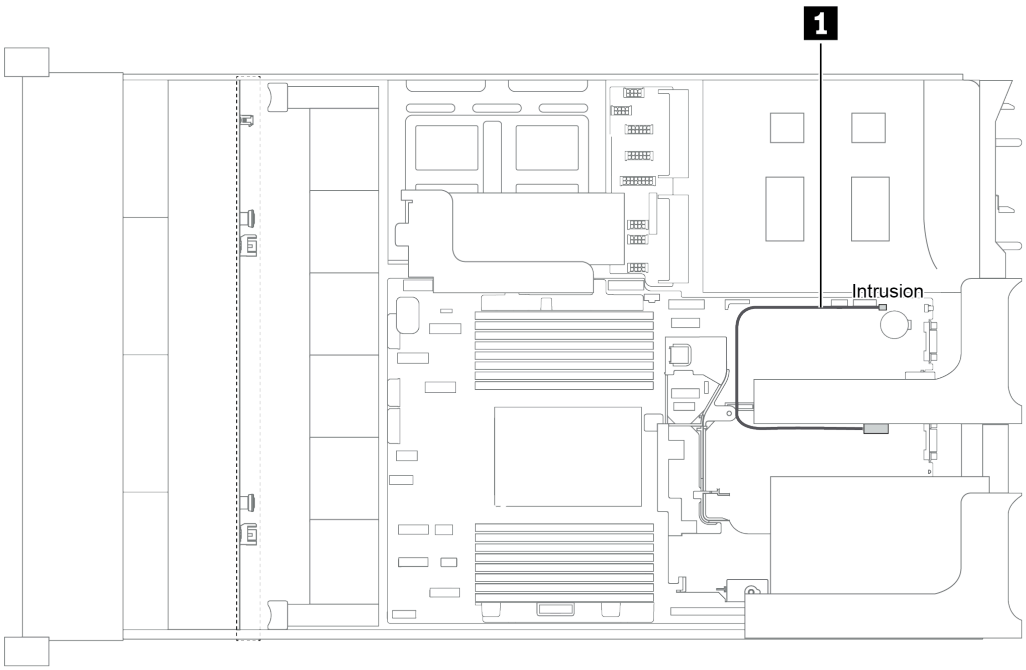

Figure 31. Intrusion switch cable routing

Cable	To
1 Intrusion switch cable from the riser 2 bracket	Intrusion switch connector on the system board

Riser cards

This section provides cable routing information for riser cards.

The server supports up to four riser cards: riser card 1, riser card 2, riser card 3, and internal riser card. Among which, the following riser cards need cable connections:

- x16/x16 PCIe riser card 1: "Riser card 1 cable connections" on page 46
- x16/x8/x8 PCIe riser card 1: "Riser card 1 cable connections" on page 46
- x8/x8 PCIe riser card 3: "Riser card 3 (x8/x8 PCIe) cable connection" on page 48
- x16/x16 PCIe riser card 3: "Riser card 3 (x16/x16 PCIe) cable connection" on page 49
- Riser 3 power and sideband connection: "Riser card 3 power and sideband connection" on page 49

The riser card types vary by server model. For detailed information, see "Rear view" on page 23.

Riser card 1 cable connections

Note: The cable connections for x16/x16 PCIe riser card 1 and x16/x8/x8 PCIe riser card 1 are the same.

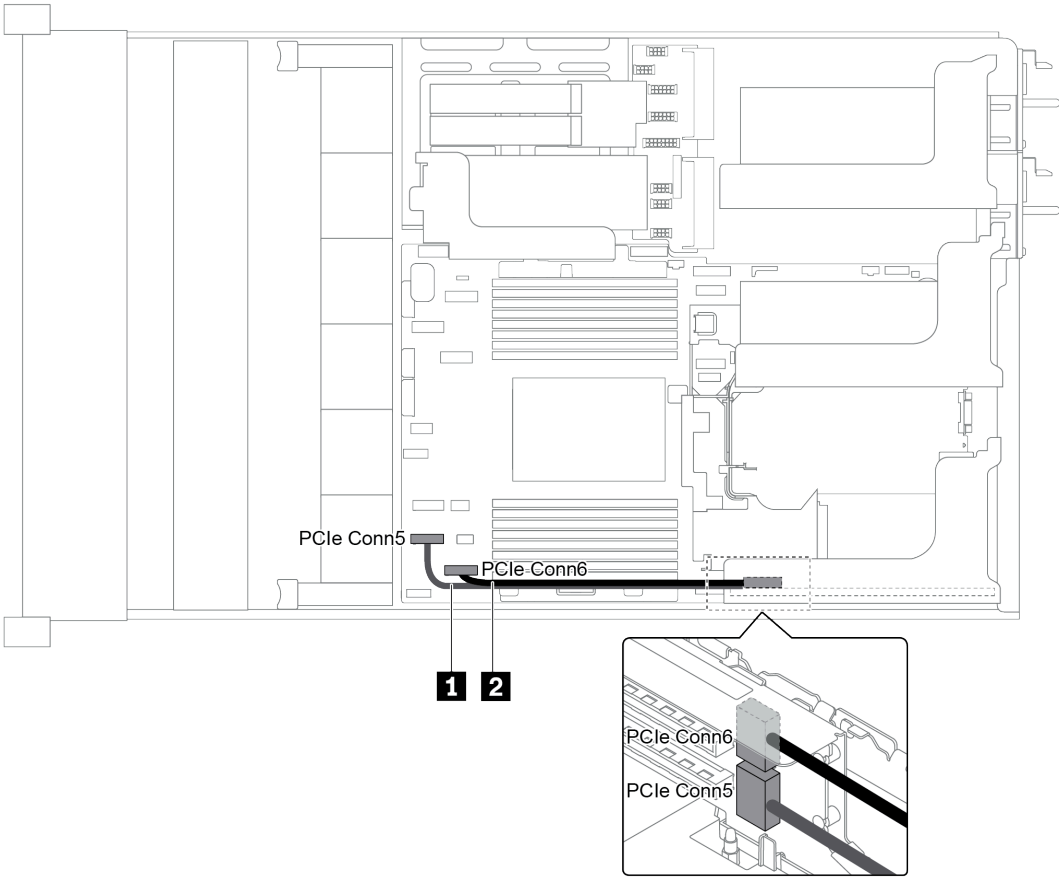

Figure 32. Cable routing for riser card 1

Cable	From	To
1 Signal cable	PCIe connector 5 on the riser card	PCIe connector 5 on the system board
2 Signal cable	PCIe connector 6 on the riser card	PCIe connector 6 on the system board

Note: x16/x16 or x16/x8/x8 PCIe riser card 1 is not supported if three 8x 2.5-inch front drive backplanes are connected to onboard PCIe connectors.

Riser card 3 (x8/x8 PCIe) cable connection

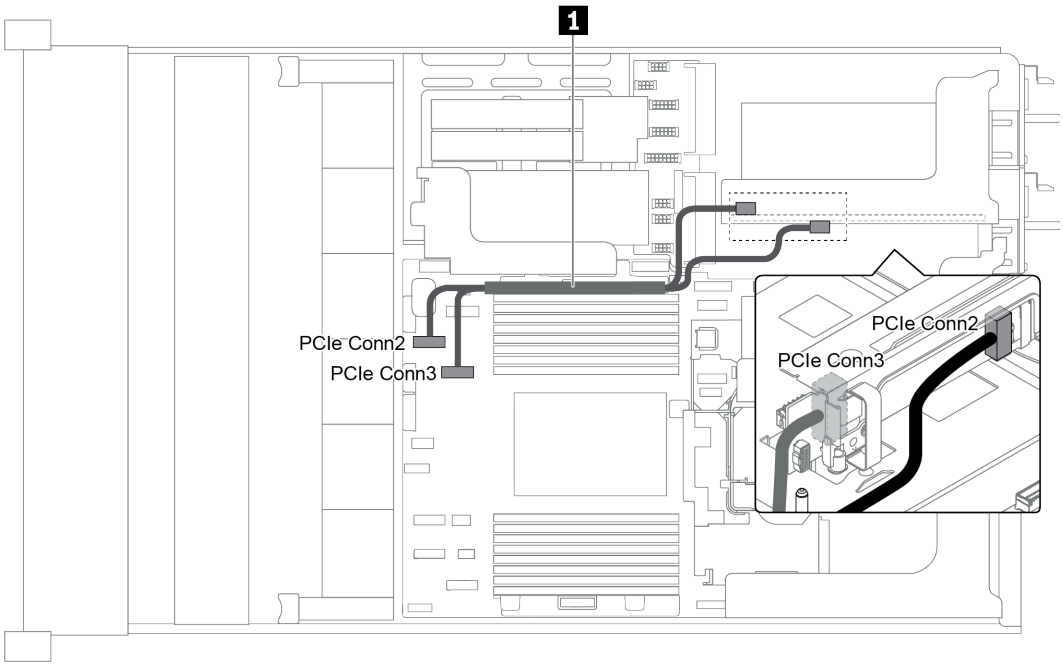

Figure 33. Cable routing for riser card 3 (x8/x8 PCIe)

Cable	From	To
1 Signal cable	PCIe connector 2 on the riser card	PCIe connector 2 on the system board
	PCIe connector 3 on the riser card	PCIe connector 3 on the system board

Note: x8/x8 PCIe riser card 3 is not supported if the server has a 12 x 3.5-inch AnyBay backplane or 8 x 2.5-inch NVMe backplane installed.

Riser card 3 (x16/x16 PCIe) cable connection

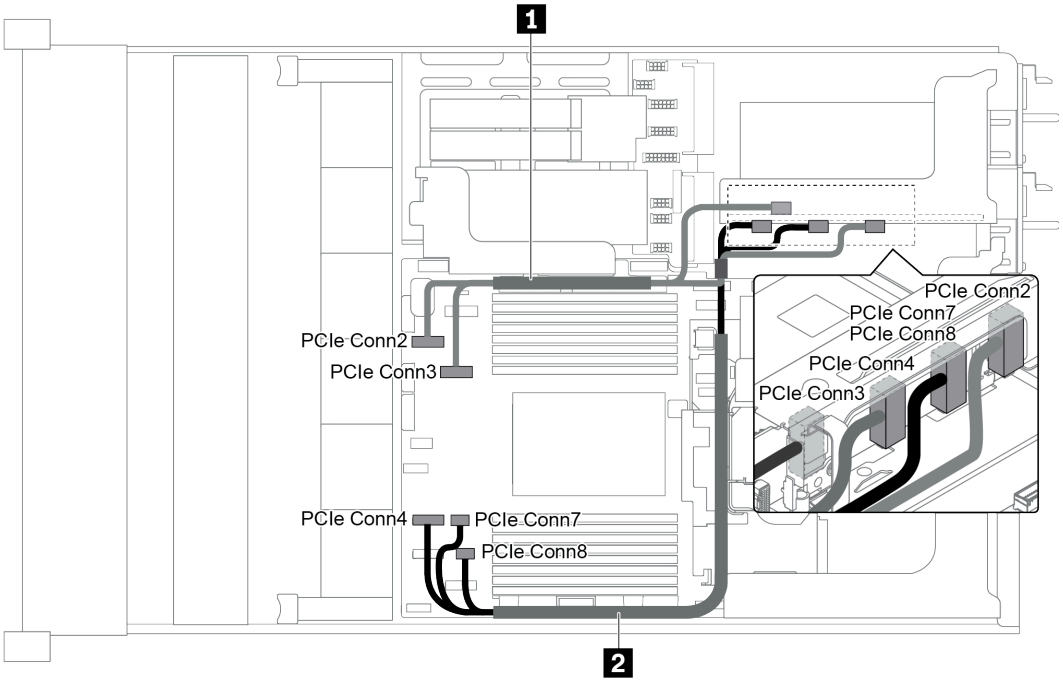

Figure 34. Cable routing for riser card 3 (x16/x16 PCIe)

Cable	From	To
1 Signal cable	PCIe connector 2 on the riser card	PCIe connector 2 on the system board
	PCIe connector 3 on the riser card	PCIe connector 3 on the system board
2 Signal cable	PCIe connector 7-8 on the riser card	PCIe connectors 7 and 8 on the system board
	PCIe connector 4 on the riser card	PCIe connector 4 on the system board

Note: x16/x16 PCIe riser card 3 is not supported if the server has a 12 x 3.5-inch AnyBay backplane, 12 x 3.5-inch SAS/SATA front backplane (on board), 8 x 3.5-inch SAS/SATA front backplane (on board), 8 x 2.5-inch NVMe backplane, or M.2 drive installed.

Riser card 3 power and sideband connection

Note: The power and sideband connections for x8/x8 PCIe riser card 3 and x16/x16 PCIe riser card 3 are the same.

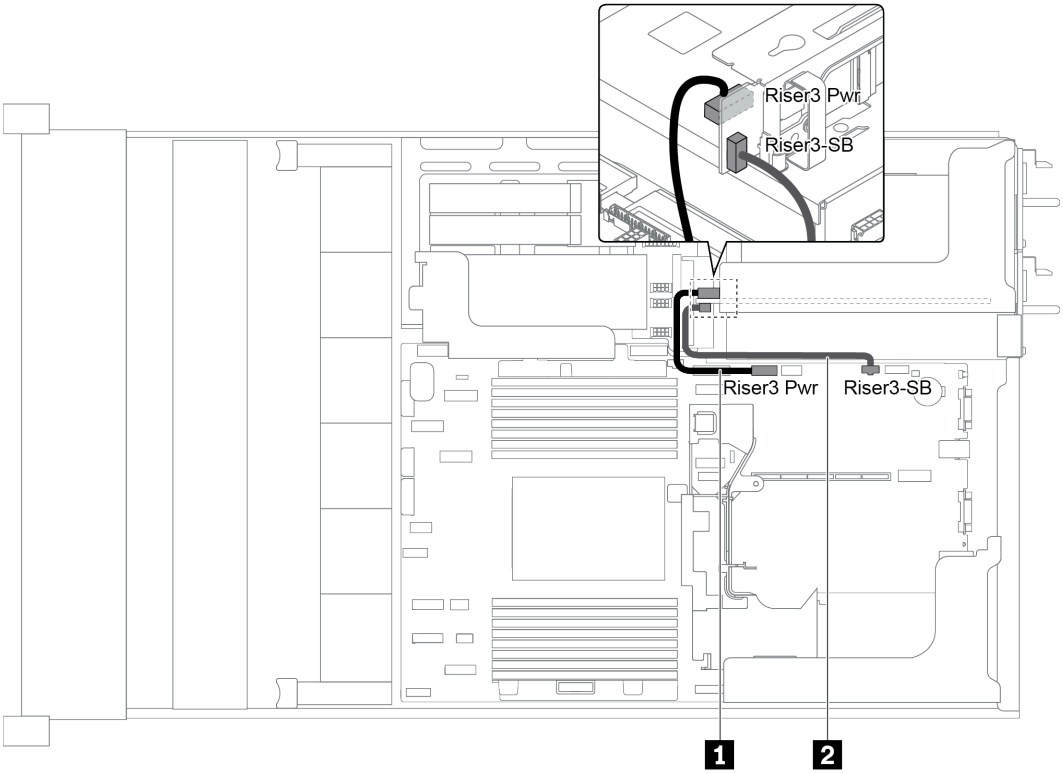

Figure 35. Riser card 3 power and sideband connection

Cable	From	To
1 Signal cable	Power connector on the riser card	Riser 3 power connector on the system board
2 Signal cable	Sideband connector on the riser card	Riser 3 sideband on the system board

Backplanes

Use the section to understand the cable routing for backplanes.

Cable routing for backplanes depends on the server model and backplanes installed. Refer to the specific model for cable routing information for your server:

- "Backplane power connections" on page 51
- "Server model with 8 x 3.5-inch front drive bays (SAS/SATA)" on page 55
- "Server model with 12 x 3.5-inch front drive bays (SAS/SATA)" on page 57
- "Server model with 12 x 3.5-inch front drive bays (8 SAS/SATA + 4 AnyBay)" on page 66
- "Server model with 8 x 2.5-inch front drive bays (SAS/SATA or NVMe)" on page 76
- "Server model with 16 x 2.5-inch front drive bays (SAS/SATA)" on page 77
- "Server model with 16 x 2.5-inch front drive bays (8 SAS/SATA + 8 NVMe)" on page 85
- "Server model with 16 x 2.5-inch front drive bays (NVMe)" on page 89
- "Server model with 24 x 2.5-inch front drive bays (SAS/SATA)" on page 92
- "Server model with 24 x 2.5-inch front drive bays (16 SAS/SATA + 8 NVMe)" on page 105
- "Server model with 24 x 2.5-inch front drive bays (NVMe)" on page 121

Backplane power connections

This section provides information for backplane power connections.

- “Power connections for front 2.5-inch-drive backplanes” on page 51
- “Power connections for front 3.5-inch-drive backplanes” on page 52
- “Power connections for middle 2.5-inch-drive backplanes” on page 53
- “Power connections for the middle 3.5-inch-drive backplane” on page 54
- “Power connections for the rear backplanes” on page 54

Power connections for front 2.5-inch-drive backplanes

The server supports up to three front 2.5-inch-drive backplanes.

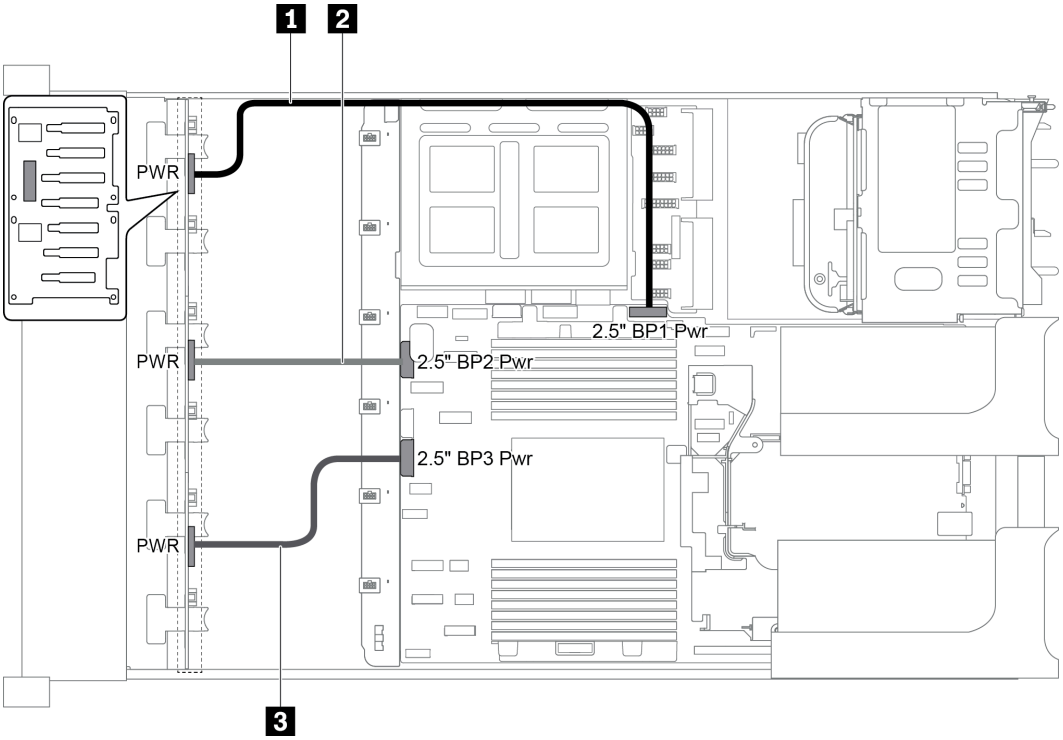

Figure 36. Power cabling for front 2.5-inch-drive backplanes

From	To
1 Power connector on backplane 1	Front backplane 1 power connector on the system board
2 Power connector on backplane 2	Front backplane 2 power connector on the system board
3 Power connector on backplane 3	Front backplane 3 power connector on the system board

Power connections for front 3.5-inch-drive backplanes

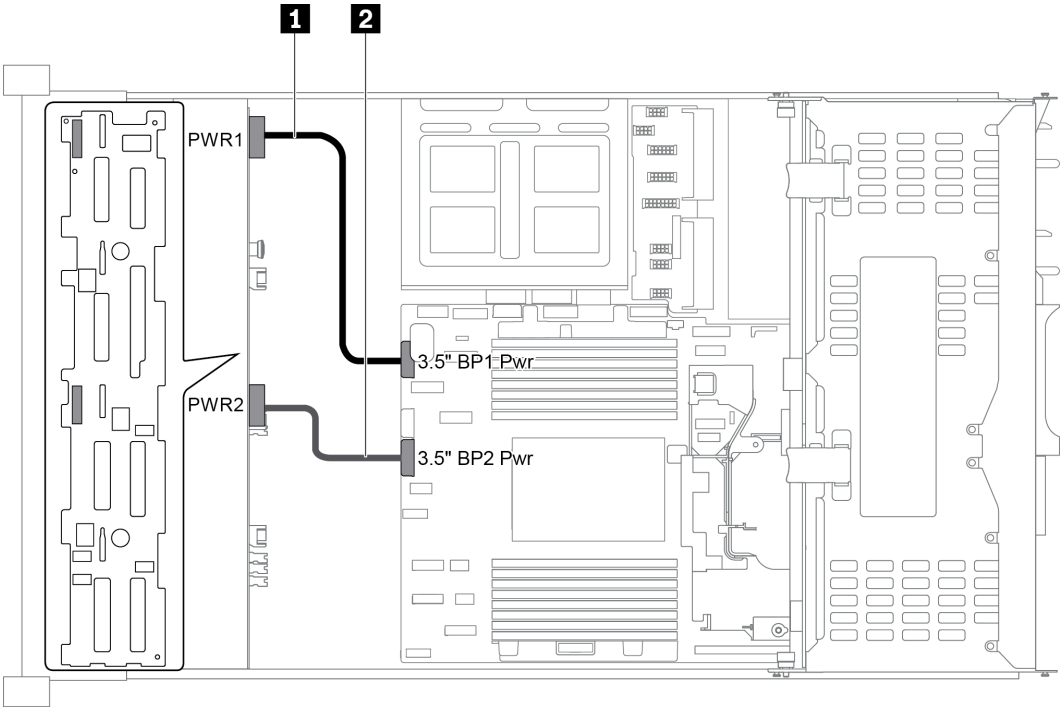

Figure 37. Power cabling for front 3.5-inch-drive backplanes

From	To
1 Power connector 1 on the backplane	Front backplane power connector 1 on the system board
2 Power connector 2 on the backplane	Front backplane power connector 2 on the system board

Power connections for middle 2.5-inch-drive backplanes

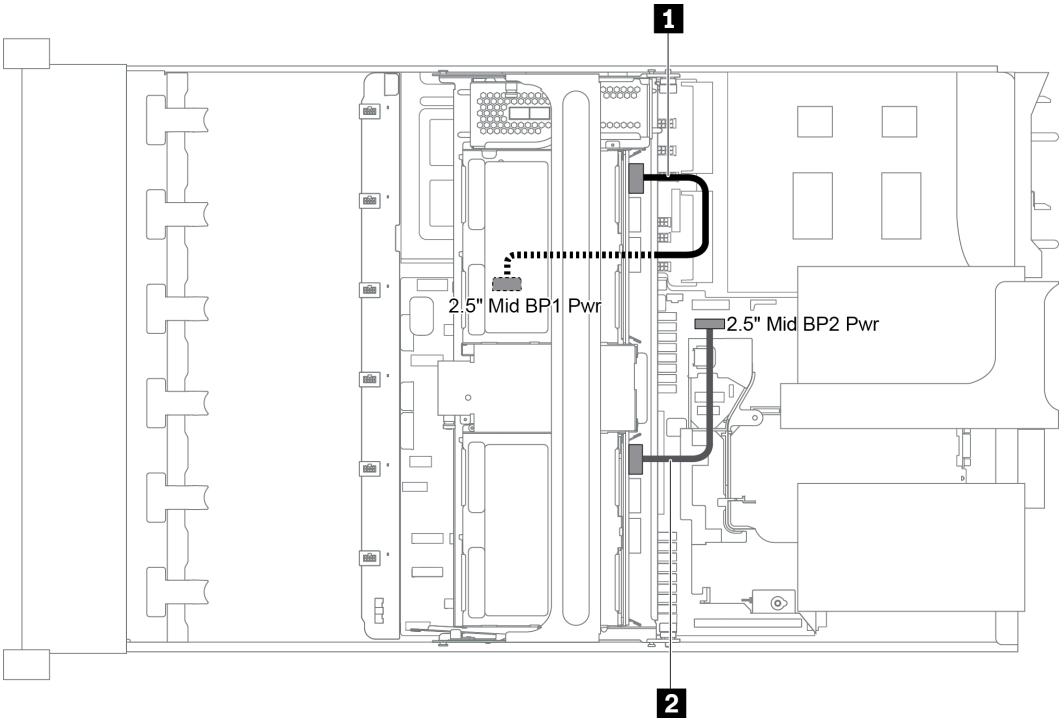

Figure 38. Power cabling for middle 2.5-inch-drive backplanes

From	To
1 Power connector on the backplane 1	Middle backplane 1 power connector on the system board
2 Power connector on the backplane 2	Middle backplane 2 power connector on the system board

Note: The middle backplane 1 power connector (2.5" Mid BP1 Pwr) is under the middle drive cage.

Power connections for the middle 3.5-inch-drive backplane

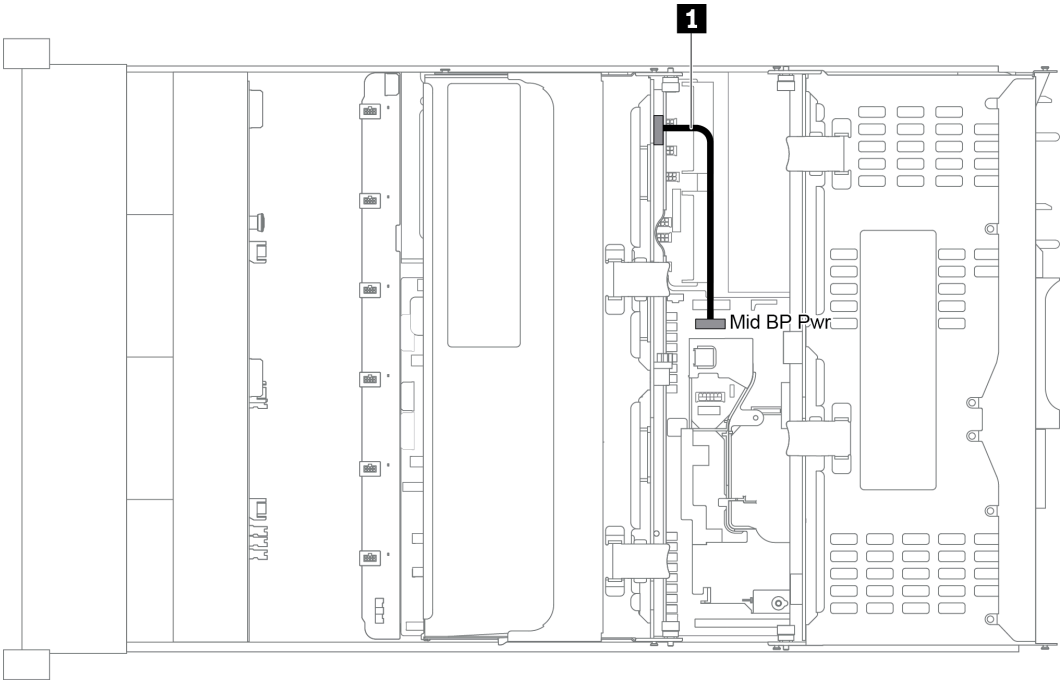

Figure 39. Power cabling for the middle 3.5-inch-drive backplane

From	To
1 Power connector on the backplane	Middle backplane power connector on the system board

Power connections for the rear backplanes

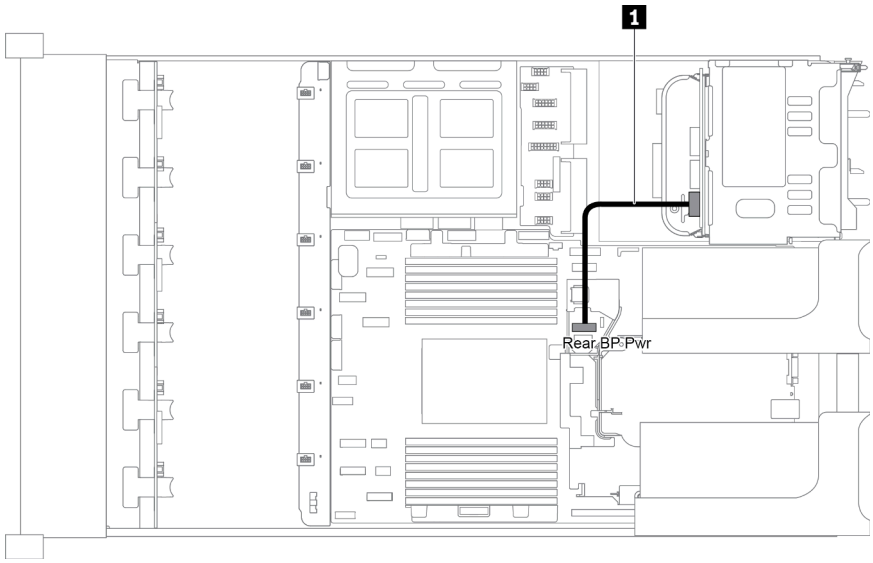

Figure 40. Power cabling for the rear 2.5-inch-drive backplane

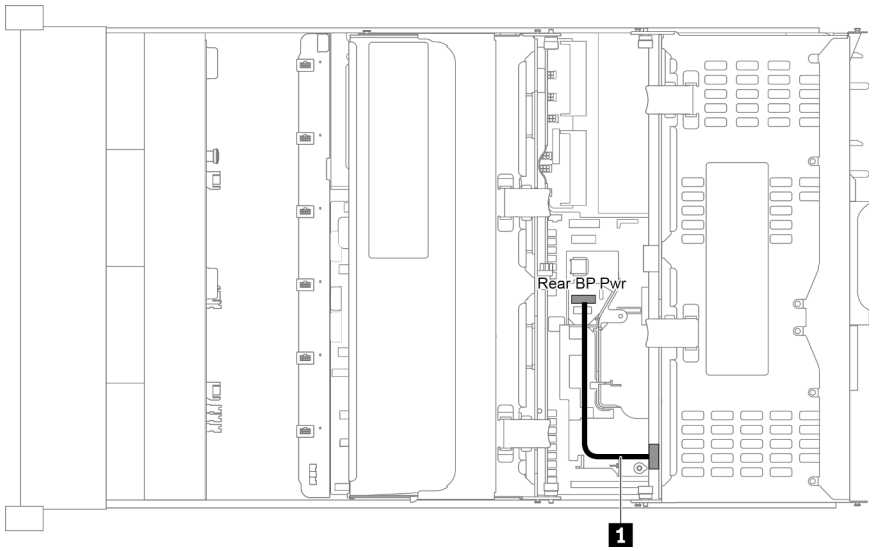

Figure 41. Power cabling for the rear 3.5-inch-drive backplane

From	To
1 Power connector on the backplane	Rear backplane power connector on the system board

Server model with 8 x 3.5-inch front drive bays (SAS/SATA)

This section provides cable routing information for the server model with one 8 x 3.5-inch SAS/SATA front backplane.

- "Configuration 1: one 8 x 3.5 SAS/SATA front backplane" on page 56
- "Configuration 2: one 8 x 3.5 SAS/SATA front backplane, one 8i RAID/HBA adapter" on page 56

Configuration 1: one 8 x 3.5 SAS/SATA front backplane

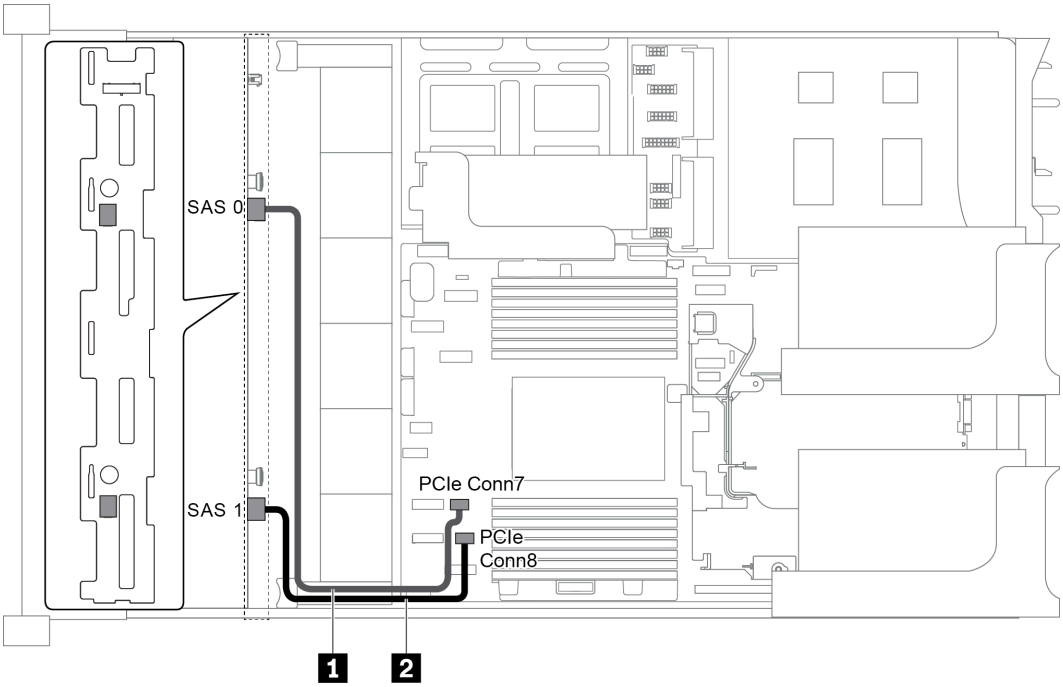

Figure 42. Cable routing for configuration with one 8 x 3.5 SAS/SATA front backplane

Cable	From	To
1 SAS signal cable	SAS 0 connector on the backplane	PCIe connector 7 on the system board
2 SAS signal cable	SAS 1 connector on the backplane	PCIe connector 8 on the system board

Notes:

- When the SAS/SATA backplane is connected to PCIe connectors on the system board, only SATA drives are supported. No SAS drives are supported.
- When the SAS/SATA backplane is connected to PCIe connectors on the system board, x16/x16 riser card 3 is not supported.

Configuration 2: one 8 x 3.5 SAS/SATA front backplane, one 8i RAID/HBA adapter

Note: The RAID/HBA adapter can be installed on the internal riser card (scenario 1), riser card 1 (scenario 2), or riser card 2 (scenario 3). The following illustration shows the cable connections for scenario 1. The cable connections are the same for scenarios 2 and 3.

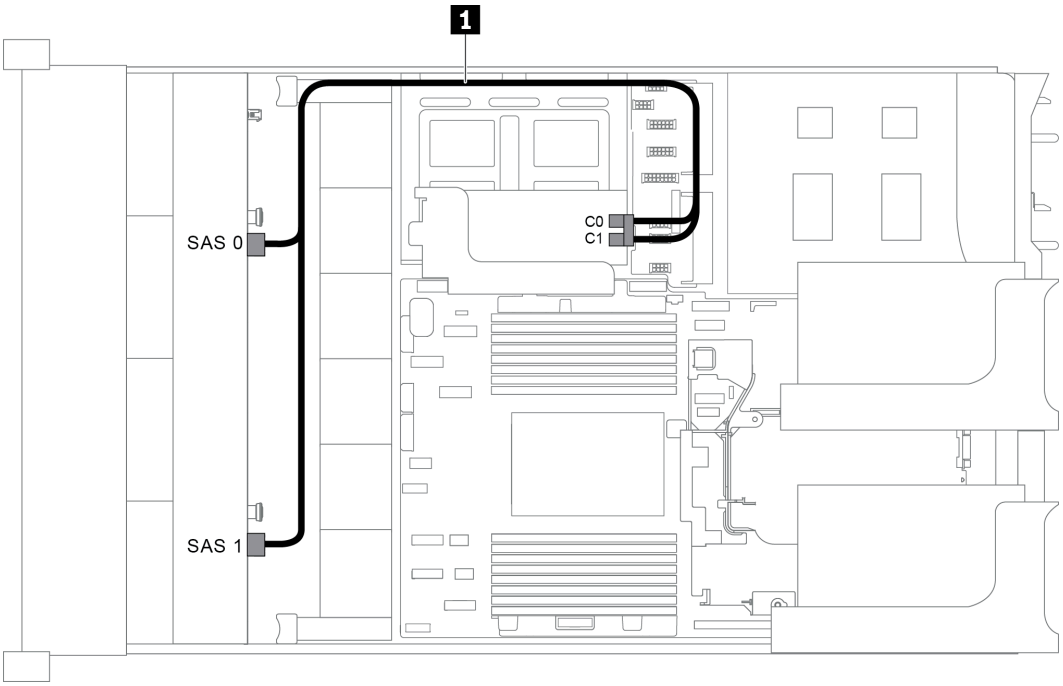

Figure 43. Cable routing for configuration with one 8 x 3.5 SAS/SATA front backplane and one 8i RAID/HBA adapter

Note: When a Gen 4 RAID/HBA adapter is installed, ensure that you use the corresponding Gen 4 cable:

ThinkSystem SR655 3.5" SAS/SATA 8-Bay X40 RAID Cable Kit

Cable	From	To
1 SAS signal cable	SAS 0 connector on the backplane	The RAID/HBA adapter • Gen 3 : C0 • Gen 4 : C0
	SAS 1 connector on the backplane	The RAID/HBA adapter • Gen 3 : C1 • Gen 4 : C0

Server model with 12 x 3.5-inch front drive bays (SAS/SATA)

This section provides cable routing information for the server model with one 12 x 3.5-inch SAS/SATA front backplane.

- "Configuration 1: one 12 x 3.5" SAS/SATA front backplane, onboard connections" on page 58
- "Configuration 2: one 12 x 3.5" SAS/SATA front backplane, one 16i RAID/HBA adapter" on page 58
- "Configuration 3: one 12 x 3.5" SAS/SATA front backplane, one rear drive cage (SAS/SATA)" on page 59
- "Configuration 4: one 12 x 3.5" SAS/SATA front backplane, one rear drive cage (SAS/SATA), one 16i RAID/HBA adapter" on page 60
- "Configuration 5: one 12 x 3.5" SAS/SATA front backplane, one rear drive cage (SAS/SATA), two RAID/HBA adapters (8i+16i)" on page 61
- "Configuration 6: one 12 x 3.5" SAS/SATA front backplane, one rear drive cage (SAS/SATA), one middle drive cage (SAS/SATA), one 24i RAID adapter" on page 63

- "Configuration 7: one 12 x 3.5" SAS/SATA front backplane, one rear drive cage (SAS/SATA), one middle drive cage (SAS/SATA), two RAID/HBA adapters (8i+16i)" on page 64
- "Configuration 8: one 12 x 3.5" SAS/SATA front backplane, one rear drive cage (SAS/SATA), one middle drive cage (SAS/SATA), one 32i RAID adapter" on page 65

Configuration 1: one 12 x 3.5" SAS/SATA front backplane, onboard connections

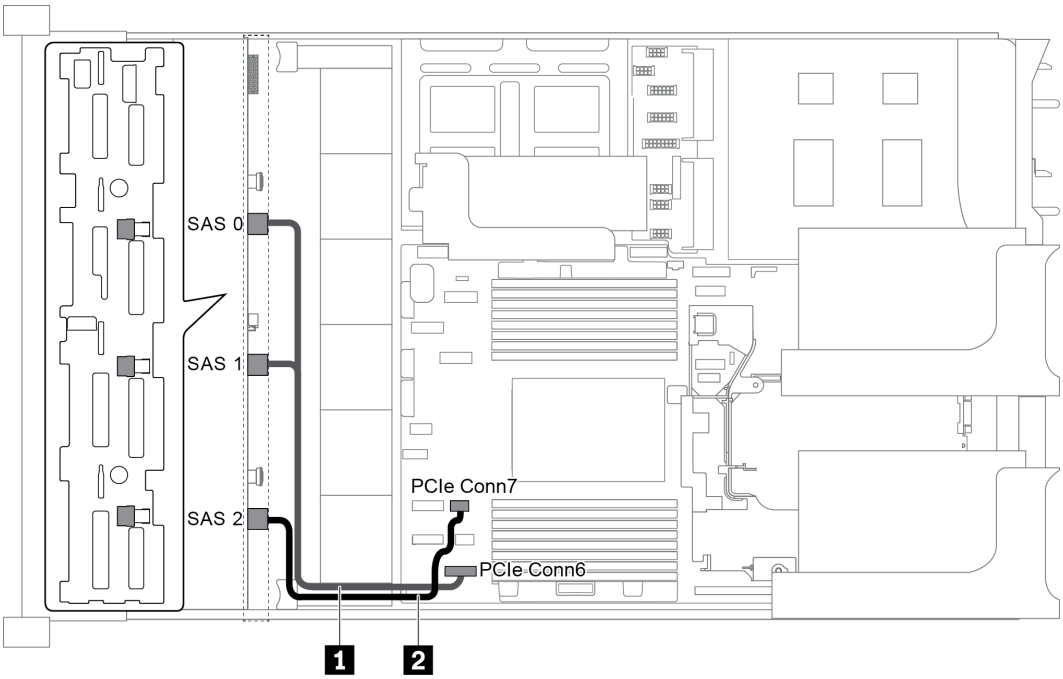

Figure 44. Cable routing for configuration with one 12 x 3.5" SAS/SATA front backplane

Cable	From	To
1 SAS signal cable	SAS 0 and SAS 1 connectors on the backplane	PCIe connector 6 on the system board
2 SAS signal cable	SAS 2 connector on the backplane	PCIe connector 7 on the system board

Note: When the SAS/SATA backplane is connected to PCIe connectors on the system board, only SATA drives are supported. No SAS drives are supported.

Configuration 2: one 12 x 3.5" SAS/SATA front backplane, one 16i RAID/HBA adapter

Note: The RAID/HBA adapter can be installed on the riser card 1 (scenario 1) or riser card 2 (scenario 2). The following illustration shows the cable connections for scenario 1. The cable connections are the same for scenario 2.

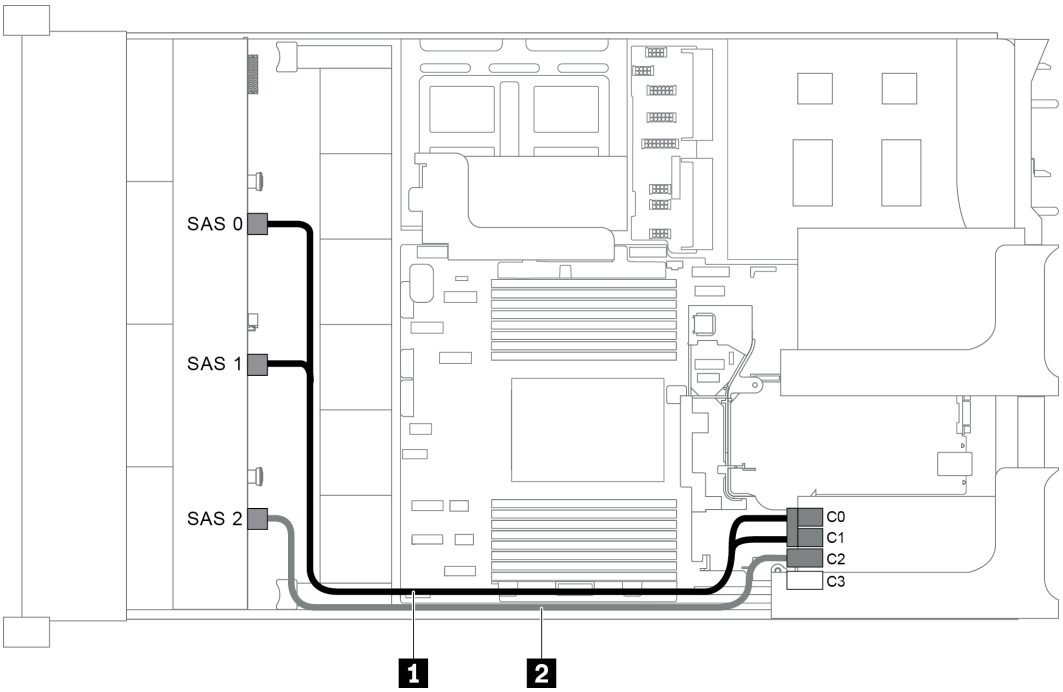

Figure 45. Cable routing for configuration with one 12 x 3.5" SAS/SATA front backplane and one 16i RAID/HBA adapter

Note: When a Gen 4 RAID/HBA adapter is installed, ensure that you use the corresponding Gen 4 cable:

ThinkSystem SR655 3.5" SAS/SATA 12-Bay X40 RAID Cable Kit

Cable	From	To
1 SAS signal cable	SAS 0 connector on the backplane	The RAID/HBA adapter • Gen 3：C0 • Gen 4：C0
	SAS 1 connector on the backplane	The RAID/HBA adapter • Gen 3：C1 • Gen 4：C0
2 SAS signal cable	SAS 2 connector on the backplane	The RAID/HBA adapter • Gen 3：C2 • Gen 4：C1

Configuration 3: one 12 x 3.5" SAS/SATA front backplane, one rear drive cage (SAS/SATA)

Note: This configuration supports one rear 3.5-inch SAS/SATA drive cage (scenario 1) or rear 2.5-inch SAS/SATA drive cage (scenario 2). The following illustration shows the cable connections for scenario 1. The cable connections are the same for scenario 2.

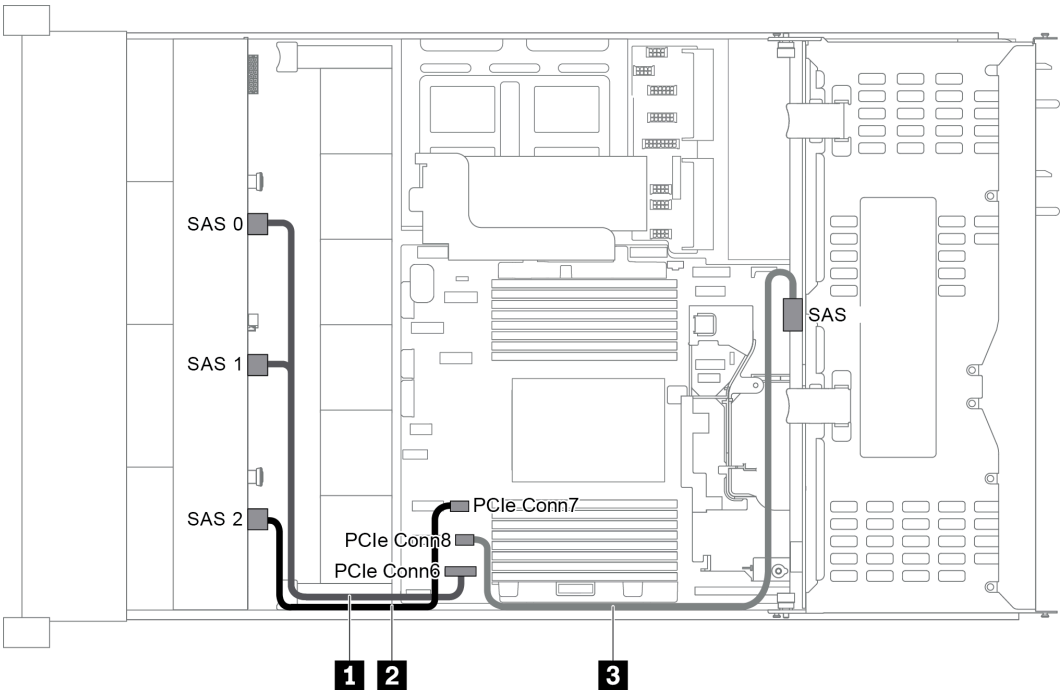

Figure 46. Cable routing for configuration with one 12 x 3.5" SAS/SATA front backplane and one rear drive cage (SAS/SATA)

Cable	From	To
1 SAS signal cable	SAS 0 and SAS 1 connectors on the front backplane	PCIe connector 6 on the system board
2 SAS signal cable	SAS 2 connector on the front backplane	PCIe connector 7 on the system board
3 SAS signal cable	SAS connector on the rear backplane	PCIe connector 8 on the system board

Note: When the SAS/SATA backplane is connected to PCIe connectors on the system board, only SATA drives are supported. No SAS drives are supported.

Configuration 4: one 12 x 3.5" SAS/SATA front backplane, one rear drive cage (SAS/SATA), one 16i RAID/HBA adapter

Note: This configuration supports one rear 3.5-inch SAS/SATA drive cage (scenario 1) or rear 2.5-inch SAS/SATA drive cage (scenario 2). The following illustration shows the cable connections for scenario 1. The cable connections are the same for scenario 2.

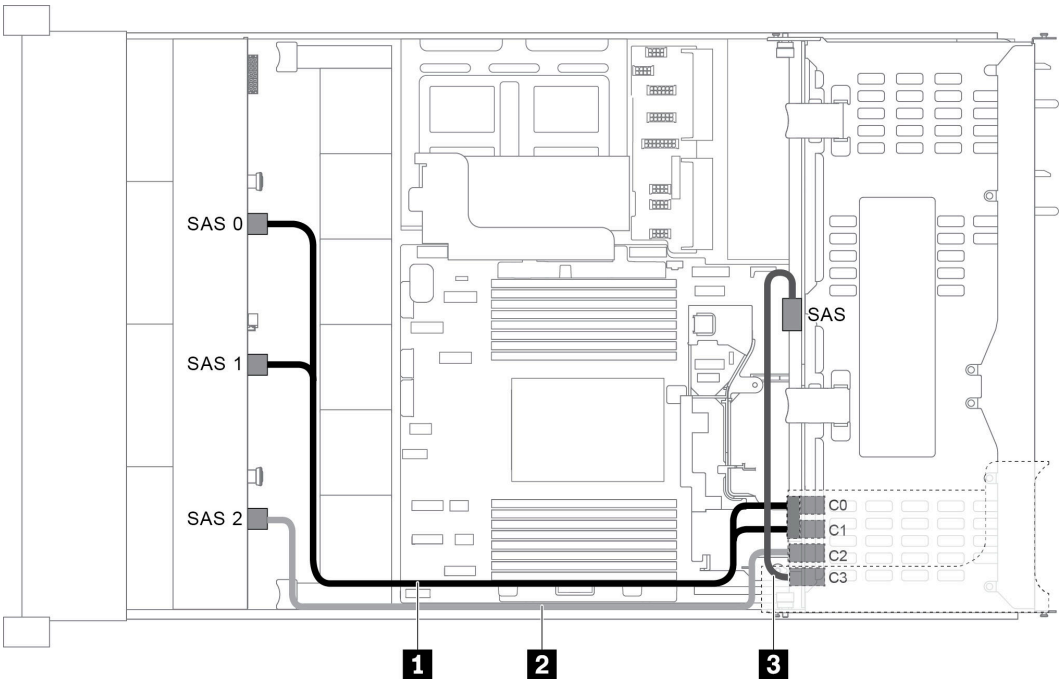

Figure 47. Cable routing for configuration with one 12 x 3.5" SAS/SATA front backplane, one rear drive cage, and one 16i RAID/HBA adapter

Note: When a Gen 4 RAID/HBA adapter is installed, ensure that you use the corresponding Gen 4 cable:

For cable 1: **ThinkSystem SR655 3.5" SAS/SATA 12-Bay X40 RAID Cable Kit**

For cable 2 and 3: **ThinkSystem SR655 2.5" & 3.5" SAS/SATA 4-Bay Rear Backplane X40 RAID Cable Kit**

Cable	From	To
1 SAS signal cable	SAS 0 connector on the front backplane	The RAID/HBA adapter • Gen 3：C0 • Gen 4：C0
	SAS 1 connector on the front backplane	The RAID/HBA adapter • Gen 3：C1 • Gen 4：C0
2 SAS signal cable	SAS 2 connector on the front backplane	The RAID/HBA adapter • Gen 3：C2 • Gen 4：C1
3 SAS signal cable	SAS connector on the rear backplane	The RAID/HBA adapter • Gen 3：C3 • Gen 4：C1

Configuration 5: one 12 x 3.5" SAS/SATA front backplane, one rear drive cage (SAS/SATA), two RAID/HBA adapters (8i+16i)

Note: This configuration supports one rear 3.5-inch SAS/SATA drive cage (scenario 1) or rear 2.5-inch SAS/SATA drive cage (scenario 2). The following illustration shows the cable connections for scenario 1. The cable connections are the same for scenario 2.

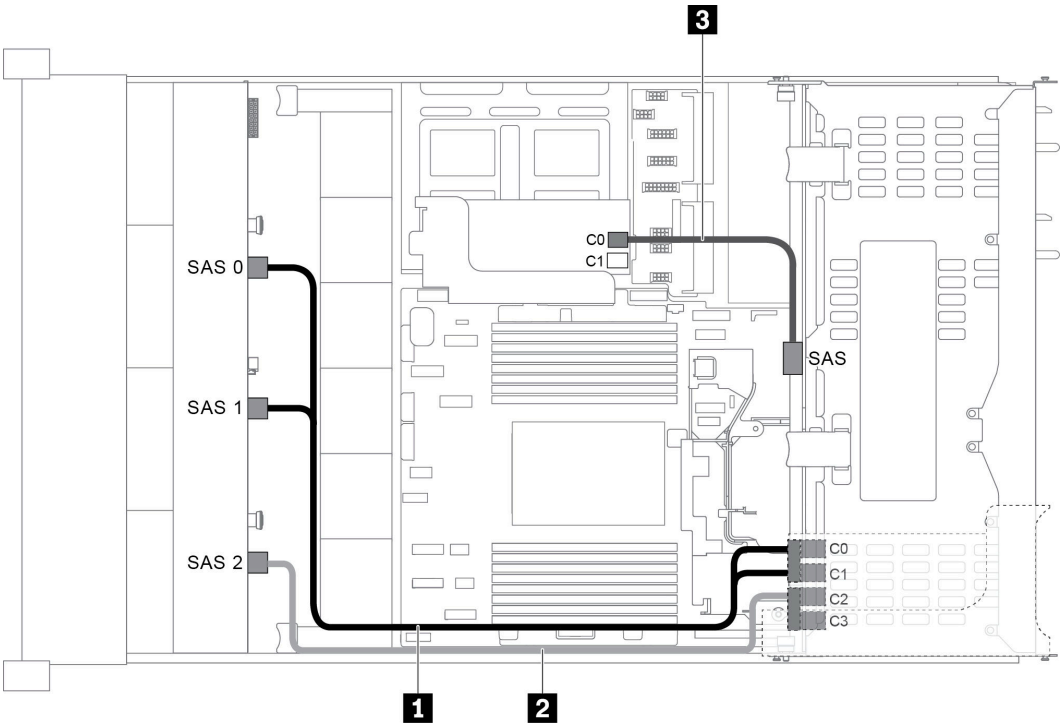

Figure 48. Cable routing for configuration with one 12 x 3.5" SAS/SATA front backplane, one drive cage, and two RAID/HBA adapters (8i+16i)

Note: When a Gen 4 RAID/HBA adapter is installed, ensure that you use the corresponding Gen 4 cable:

For cable 1 and 2: **ThinkSystem SR655 3.5" SAS/SATA 12-Bay X40 RAID Cable Kit**

For cable 3: **ThinkSystem SR655 2.5" & 3.5" SAS/SATA 4-Bay Rear Backplane X40 RAID Cable Kit**

Cable	From	To
1 SAS signal cable	SAS 0 connector on the front backplane	The 16i RAID/HBA adapter • Gen 3：C0 • Gen 4：C0
	SAS 1 connector on the front backplane	The 16i RAID/HBA adapter • Gen 3：C1 • Gen 4：C0
2 SAS signal cable	SAS 2 connector on the front backplane	The 16i RAID/HBA adapter • Gen 3：C2 • Gen 4：C1
3 SAS signal cable	SAS connector on the rear backplane	The 8i RAID/HBA adapter • Gen 3：C0 • Gen 4：C0

Configuration 6: one 12 x 3.5" SAS/SATA front backplane, one rear drive cage (SAS/SATA), one middle drive cage (SAS/SATA), one 24i RAID adapter

Note: This configuration supports one middle 3.5-inch SAS/SATA drive cage and one rear 3.5-inch SAS/SATA drive cage (scenario 1) or rear 2.5-inch SAS/SATA drive cage (scenario 2). The following illustration shows the cable connections for scenario 1. The cable connections are the same for scenario 2.

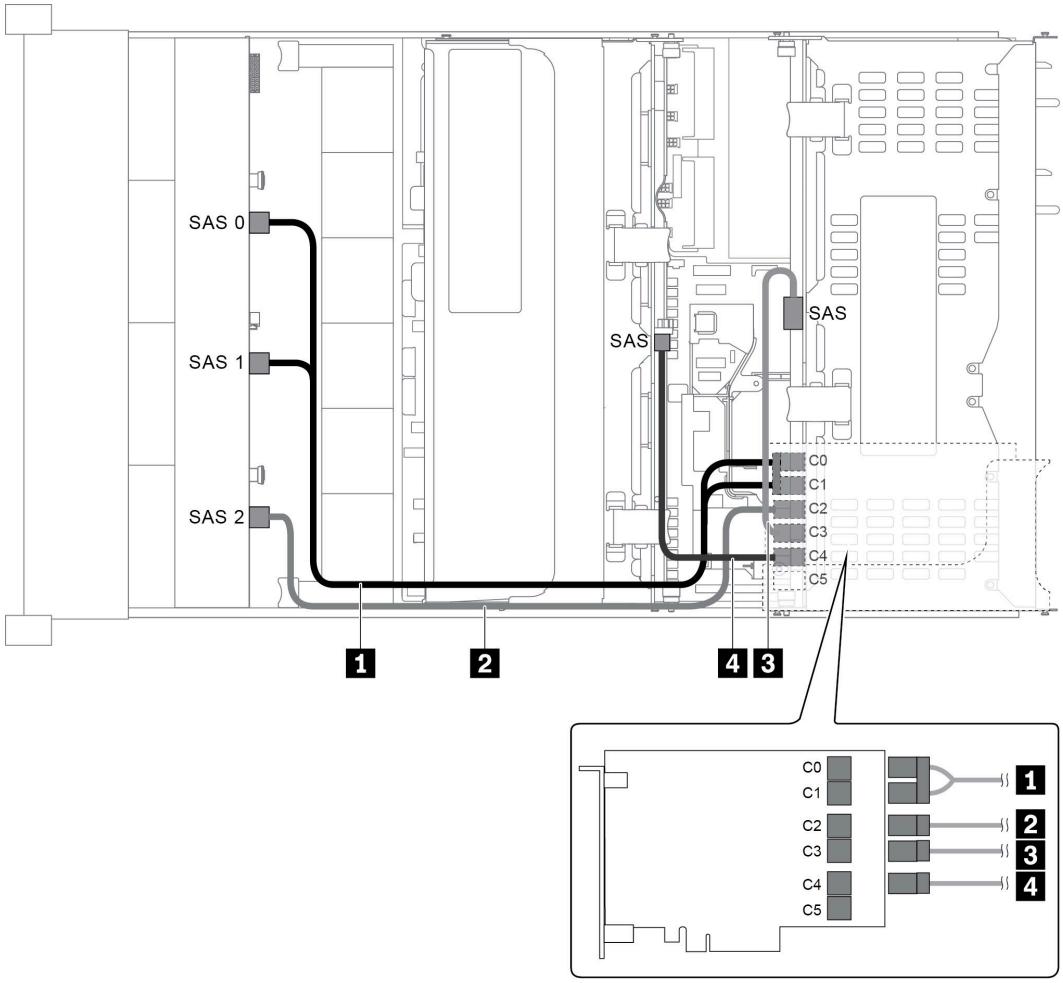

Figure 49. Cable routing for configuration with one 12 x 3.5" SAS/SATA front backplane, one rear drive cage, one middle drive cage, and one 24i RAID adapter

Cable	From	To
1 SAS signal cable	SAS 0 connector on the front backplane	Connector C0 on the 24i RAID adapter
	SAS 1 connector on the front backplane	Connector C1 on the 24i RAID adapter
2 SAS signal cable	SAS 2 connector on the front backplane	Connector C2 on the 24i RAID adapter
3 SAS signal cable	SAS connector on the rear backplane	Connector C3 on the 24i RAID adapter
4 SAS signal cable	SAS connector on the middle backplane	Connector C4 on the 24i RAID adapter

Configuration 7: one 12 x 3.5" SAS/SATA front backplane, one rear drive cage (SAS/SATA), one middle drive cage (SAS/SATA), two RAID/HBA adapters (8i+16i)

Note: This configuration supports one middle 3.5-inch SAS/SATA drive cage and one rear 3.5-inch SAS/SATA drive cage (scenario 1) or rear 2.5-inch SAS/SATA drive cage (scenario 2). The following illustration shows the cable connections for scenario 1. The cable connections are the same for scenario 2.

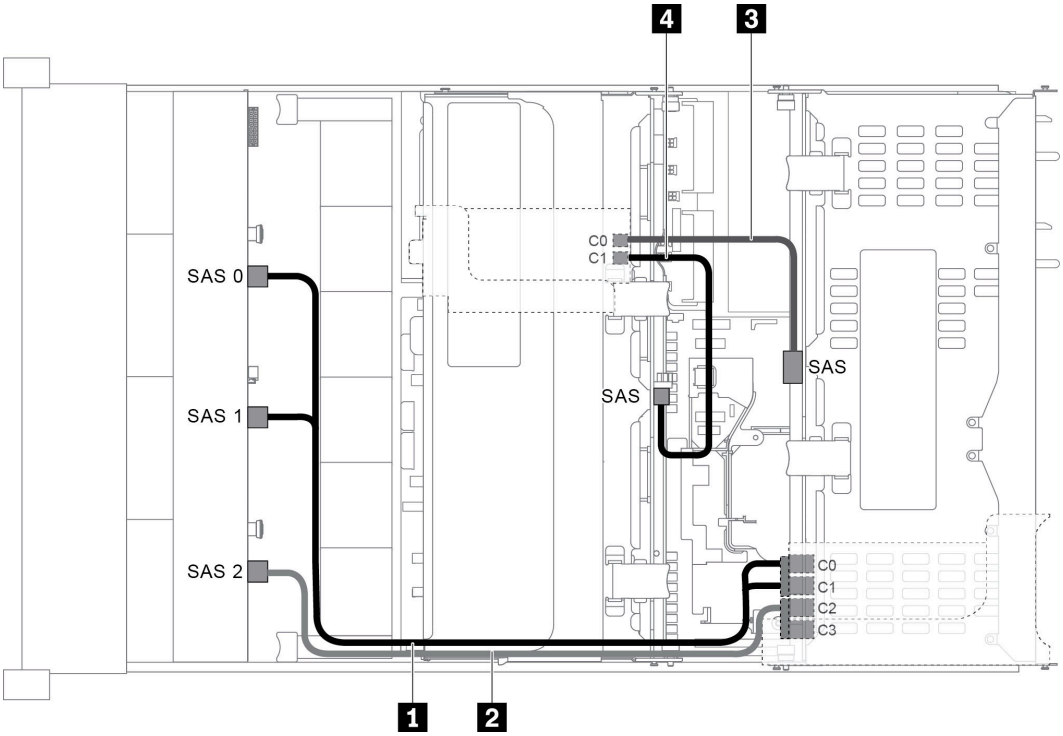

Figure 50. Cable routing for configuration with one 12 x 3.5" SAS/SATA front backplane, one rear drive cage, one middle drive cage, and two RAID/HBA adapters (8i+16i)

Note: When a Gen 4 RAID/HBA adapter is installed, ensure that you use the corresponding Gen 4 cable:

For cable 1 and 2: **ThinkSystem SR655 3.5" SAS/SATA 12-Bay X40 RAID Cable Kit**

For cable 3 and 4: **ThinkSystem SR655 2.5" & 3.5" SAS/SATA 4-Bay Rear Backplane X40 RAID Cable Kit**

Cable	From	To
1 SAS signal cable	SAS 0 connector on the front backplane	The 16i RAID/HBA adapter • Gen 3：C0 • Gen 4：C0
	SAS 1 connector on the front backplane	The 16i RAID/HBA adapter • Gen 3：C1 • Gen 4：C0
2 SAS signal cable	SAS 2 connector on the front backplane	The 16i RAID/HBA adapter • Gen 3：C2 • Gen 4：C1

Cable	From	To
3 SAS signal cable	SAS connector on the rear backplane	The 8i RAID/HBA adapter • Gen 3：C0 • Gen 4：C0
4 SAS signal cable	SAS connector on the middle backplane	The 8i RAID/HBA adapter • Gen 3：C1 • Gen 4：C0

Configuration 8: one 12 x 3.5" SAS/SATA front backplane, one rear drive cage (SAS/SATA), one middle drive cage (SAS/SATA), one 32i RAID adapter

Note: This configuration supports one middle 3.5-inch SAS/SATA drive cage and one rear 3.5-inch SAS/SATA drive cage (scenario 1) or rear 2.5-inch SAS/SATA drive cage (scenario 2). The following illustration shows the cable connections for scenario 1. The cable connections are the same for scenario 2.

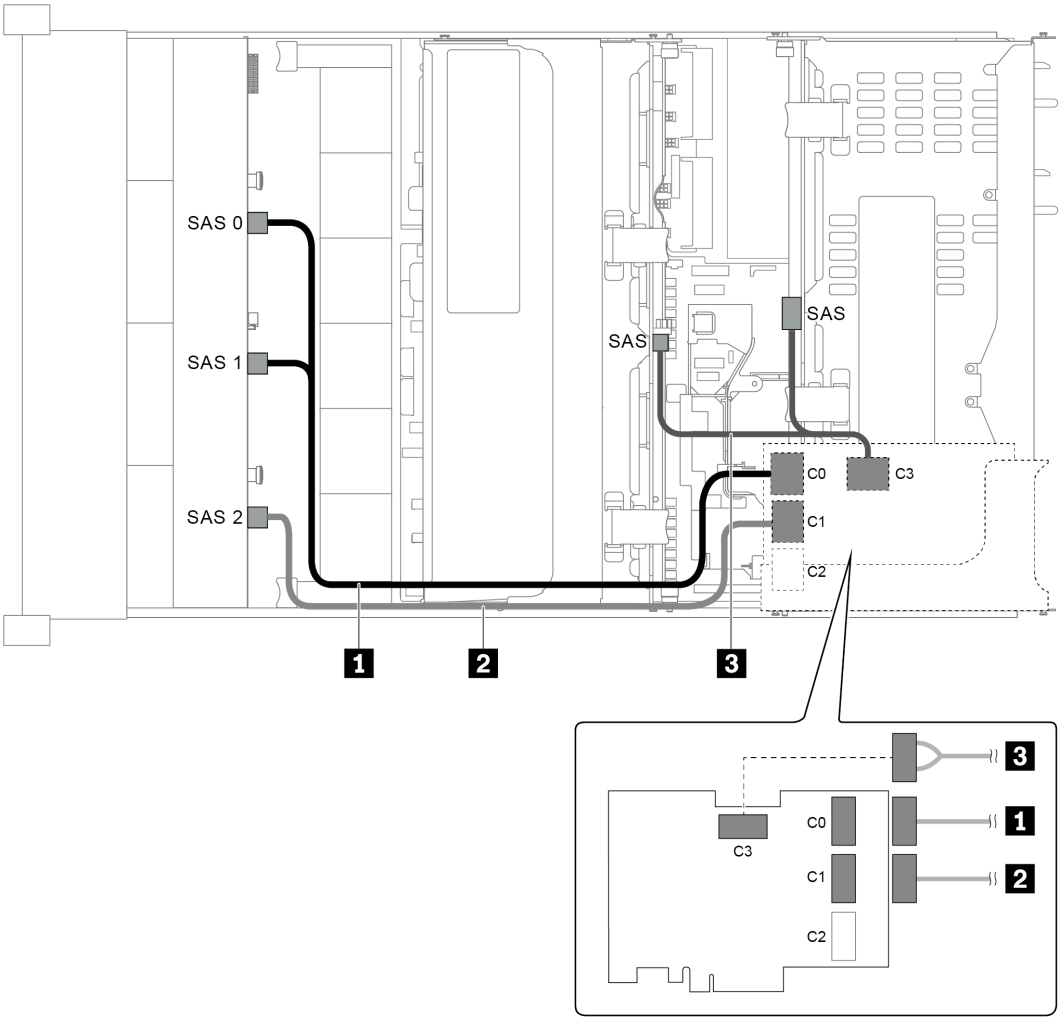

Figure 51. Cable routing for configuration with one 12 x 3.5" SAS/SATA front backplane, one rear drive cage, one middle drive cage, and one 32i RAID adapter

Note: The 32i RAID adapter belongs to Gen 4. Ensure that you use the corresponding Gen 4 cable:

For cable 1 and 2: **ThinkSystem SR655 3.5" SAS/SATA 12-Bay X40 RAID Cable Kit**

For cable 3: **ThinkSystem SR655 2.5" & 3.5" SAS/SATA 4-Bay Rear Backplane X40 RAID Cable Kit**

Cable	From	To
1 SAS signal cable	SAS 0 and SAS 1 connectors on the front backplane	Connector C0 on the 32i RAID adapter
2 SAS signal cable	SAS 2 connector on the front backplane	Connector C1 on the 32i RAID adapter
3 SAS signal cable	SAS connector on the rear backplane	Connector C3 on the 32i RAID adapter
	SAS connector on the middle backplane	

Server model with 12 x 3.5-inch front drive bays (8 SAS/SATA + 4 AnyBay)

This section provides cable routing information for the server model with one 12 x 3.5-inch AnyBay front backplane. The 12 x 3.5-inch AnyBay front backplane provides 8 SAS/SATA drive bays (bays 0–7) and 4 SAS/SATA/NVMe (called AnyBay) drive bays (bays 8–11).

Note: All the 2.5" /3.5'' or U.2 NVMe Drives (except Gen3 NVMe drives) can't support the 12X3.5'' anybay Gen3 Backplane.

- “Configuration 1: one 12 x 3.5" AnyBay front backplane, onboard connections” on page 67
- “Configuration 2: one 12 x 3.5" AnyBay front backplane, one 16i RAID/HBA adapter” on page 68
- “Configuration 3: one 12 x 3.5" AnyBay front backplane, one rear drive cage (SAS/SATA), one 16i RAID/HBA adapter” on page 69
- “Configuration 4: one 12 x 3.5" AnyBay front backplane, one rear drive cage (SAS/SATA), two RAID/HBA adapters (8i+16i)” on page 70
- “Configuration 5: one 12 x 3.5" AnyBay front backplane, one rear drive cage (SAS/SATA), one middle drive cage (SAS/SATA), one 24i RAID adapter” on page 71
- “Configuration 6: one 12 x 3.5" AnyBay front backplane, one rear drive cage (SAS/SATA), one middle drive cage (SAS/SATA), two RAID/HBA adapters (8i+16i)” on page 73
- “Configuration 7: one 12 x 3.5" AnyBay front backplane, one rear drive cage (SAS/SATA), one middle drive cage (SAS/SATA), one 32i RAID adapter” on page 74

Configuration 1: one 12 x 3.5" AnyBay front backplane, onboard connections

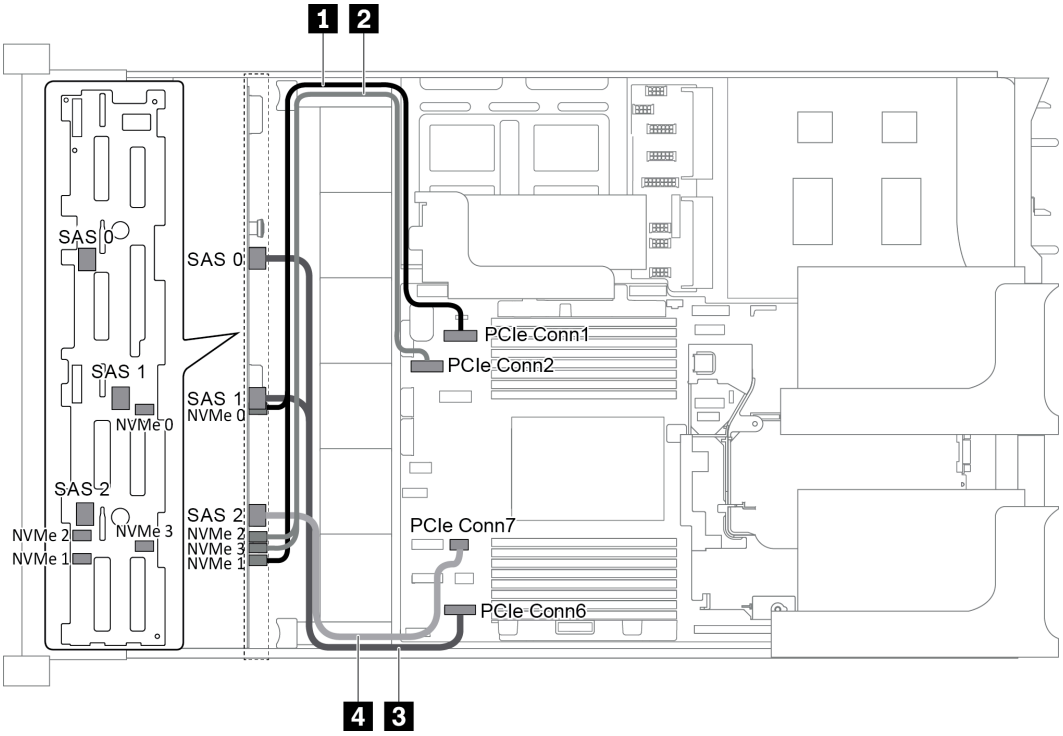

Figure 52. Cable routing for configuration with one 12 x 3.5" AnyBay front backplane

Cable	From	To
1 NVMe signal cable	NVMe 0 and NVMe 1 connectors on the backplane	PCIe connector 1 on the system board
2 NVMe signal cable	NVMe 2 and NVMe 3 connectors on the backplane	PCIe connector 2 on the system board
3 SAS signal cable	SAS 0 and SAS 1 connectors on the backplane	PCIe connector 6 on the system board
4 SAS signal cable	SAS 2 connector on the backplane	PCIe connector 7 on the system board

Note: When the 12 x 3.5-inch AnyBay backplane is connected to onboard PCIe connectors, drives 0-7 support only SATA drives, and drives 8-11 support only SATA or NVMe drives.

Configuration 2: one 12 x 3.5" AnyBay front backplane, one 16i RAID/HBA adapter

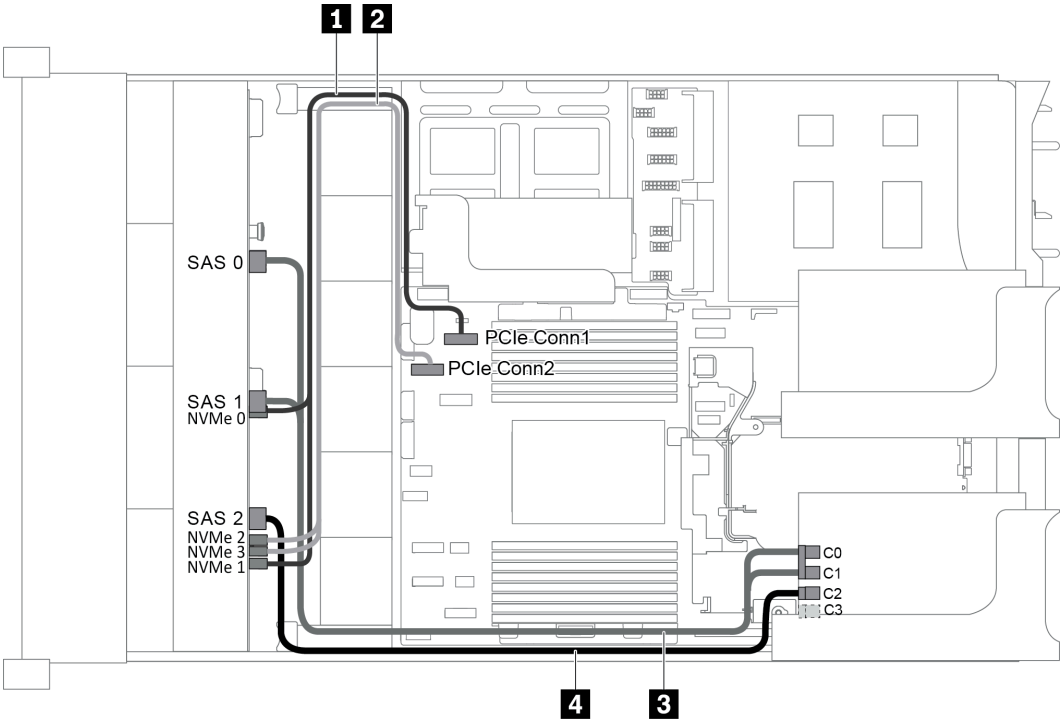

Figure 53. Cable routing for configuration with one 12 x 3.5" AnyBay front backplane and one 16i RAID/HBA adapter

Note: When a Gen 4 RAID/HBA adapter is installed, ensure that you use the corresponding Gen 4 cable:

ThinkSystem SR655 3.5" SAS/SATA 12-Bay X40 RAID Cable Kit

Cable	From	To
1 NVMe signal cable	NVMe 0 and NVMe 1 connectors on the backplane	PCIe connector 1 on the system board
2 NVMe signal cable	NVMe 2 and NVMe 3 connectors on the backplane	PCIe connector 2 on the system board
3 SAS signal cable	SAS 0 connector on the backplane	The RAID/HBA adapter • Gen 3：C0 • Gen 4：C0
	SAS 1 connector on the backplane	The RAID/HBA adapter • Gen 3：C1 • Gen 4：C0
4 SAS signal cable	SAS 2 connector on the backplane	The RAID/HBA adapter • Gen 3：C2 • Gen 4：C1

Note: With a RAID or HBA adapter connected to the 12 x 3.5-inch AnyBay backplane, drives 0-7 support SATA or SAS drives, and drives 8-11 support SATA, SAS, or NVMe drives.

Configuration 3: one 12 x 3.5" AnyBay front backplane, one rear drive cage (SAS/SATA), one 16i RAID/HBA adapter

Note: This configuration supports one rear 3.5-inch SAS/SATA drive cage (scenario 1) or rear 2.5-inch SAS/SATA drive cage (scenario 2). The following illustration shows the cable connections for scenario 1. The cable connections are the same for scenario 2.

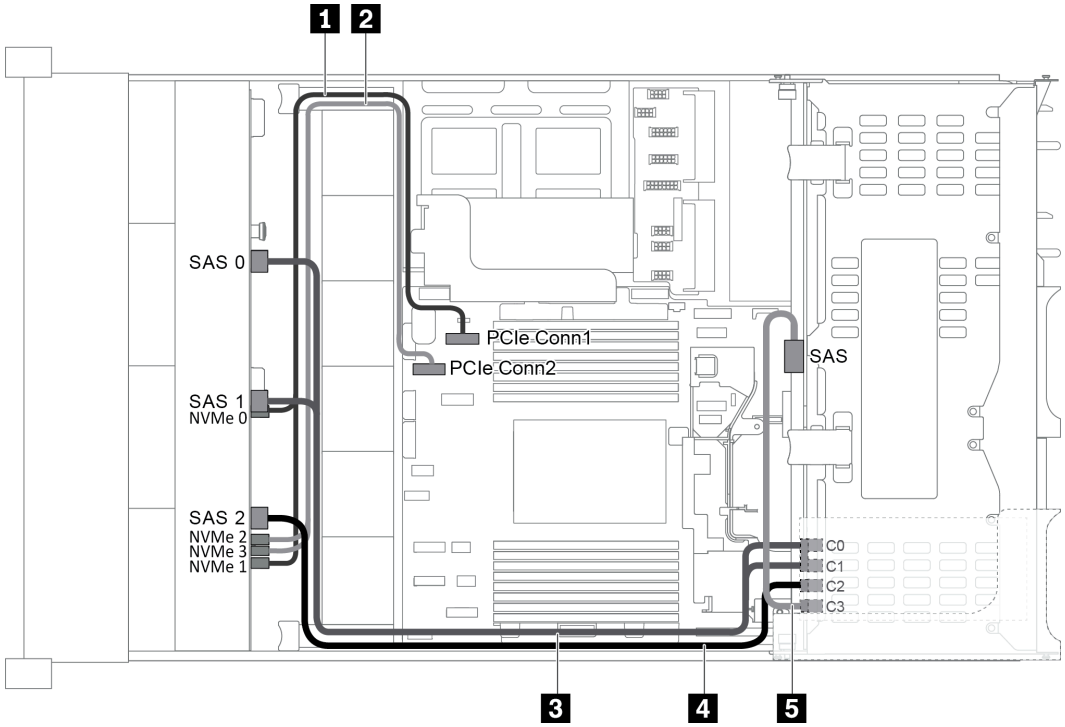

Figure 54. Cable routing for configuration with one 12 x 3.5" AnyBay front backplane, one rear drive cage, and one 16i RAID/HBA adapter

Note: When a Gen 4 RAID/HBA adapter is installed, ensure that you use the corresponding Gen 4 cable:

For cable 3: **ThinkSystem SR655 3.5" SAS/SATA 12-Bay X40 RAID Cable Kit**

For cable 4 and 5: **ThinkSystem SR655 2.5" & 3.5" SAS/SATA 4-Bay Rear Backplane X40 RAID Cable Kit**

Cable	From	To
1 NVMe signal cable	NVMe 0 and NVMe 1 connectors on the front backplane	PCIe connector 1 on the system board
2 NVMe signal cable	NVMe 2 and NVMe 3 connectors on the front backplane	PCIe connector 2 on the system board
3 SAS signal cable	SAS 0 connector on the front backplane	The RAID/HBA adapter • Gen 3：C0 • Gen 4：C0
	SAS 1 connector on the front backplane	The RAID/HBA adapter • Gen 3：C1 • Gen 4：C0

Cable	From	To
4 SAS signal cable	SAS 2 connector on the front backplane	The RAID/HBA adapter • Gen 3：C2 • Gen 4：C1
5 SAS signal cable	SAS connector on the rear backplane	The RAID/HBA adapter • Gen 3：C3 • Gen 4：C1

Note: With a RAID or HBA adapter connected to the 12 x 3.5-inch AnyBay backplane, drives 0-7 support SATA or SAS drives, and drives 8-11 support SATA, SAS, or NVMe drives.

Configuration 4: one 12 x 3.5" AnyBay front backplane, one rear drive cage (SAS/SATA), two RAID/HBA adapters (8i+16i)

Note: This configuration supports one rear 3.5-inch SAS/SATA drive cage (scenario 1) or rear 2.5-inch SAS/SATA drive cage (scenario 2). The following illustration shows the cable connections for scenario 1. The cable connections are the same for scenario 2.

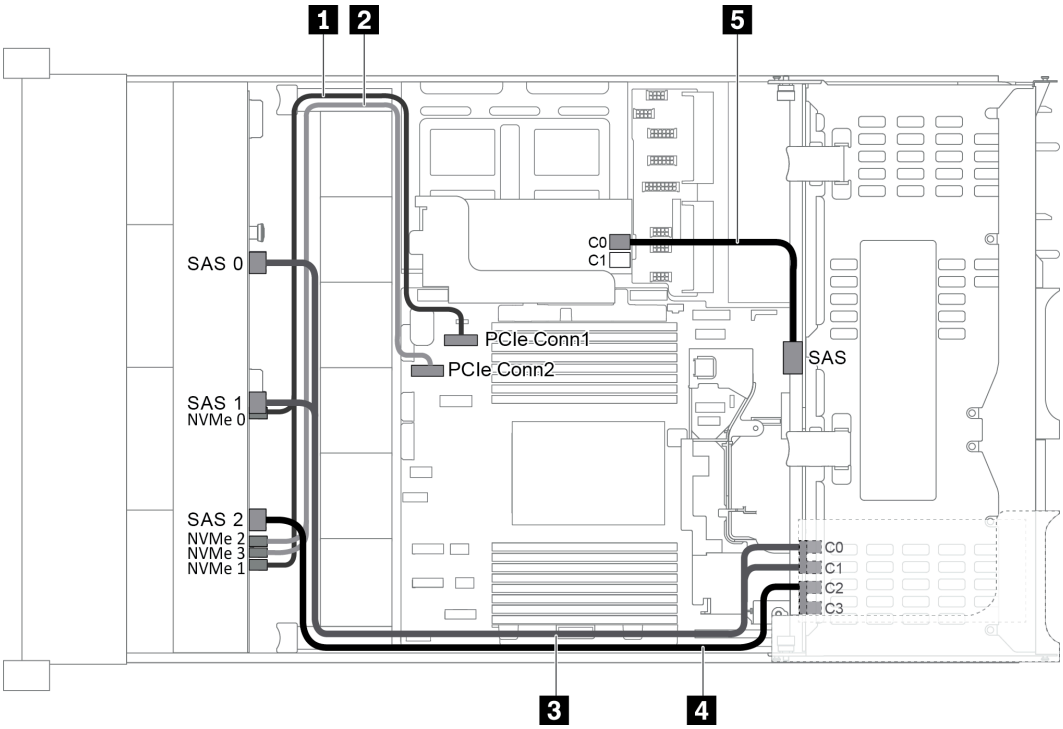

Figure 55. Cable routing for configuration with one 12 x 3.5" AnyBay front backplane, one rear drive cage, and two RAID/HBA adapters (8i+16i)

Note: When a Gen 4 RAID/HBA adapter is installed, ensure that you use the corresponding Gen 4 cable:

For cable 3 and 4: **ThinkSystem SR655 3.5" SAS/SATA 12-Bay X40 RAID Cable Kit**

For cable 5: **ThinkSystem SR655 2.5" & 3.5" SAS/SATA 4-Bay Rear Backplane X40 RAID Cable Kit**

Cable	From	To
1 NVMe signal cable	NVMe 0 and NVMe 1 connectors on the front backplane	PCIe connector 1 on the system board
2 NVMe signal cable	NVMe 2 and NVMe 3 connectors on the front backplane	PCIe connector 2 on the system board
3 SAS signal cable	SAS 0 connector on the front backplane	The 16i RAID/HBA adapter • Gen 3：C0 • Gen 4：C0
	SAS 1 connector on the front backplane	The 16i RAID/HBA adapter • Gen 3：C1 • Gen 4：C0
4 SAS signal cable	SAS 2 connector on the front backplane	The 16i RAID/HBA adapter • Gen 3：C2 • Gen 4：C1
5 SAS signal cable	SAS connector on the rear backplane	The 8i RAID/HBA adapter • Gen 3：C0 • Gen 4：C0

Note: With a RAID or HBA adapter connected to the 12 x 3.5-inch AnyBay backplane, drives 0-7 support SATA or SAS drives, and drives 8-11 support SATA, SAS, or NVMe drives.

Configuration 5: one 12 x 3.5" AnyBay front backplane, one rear drive cage (SAS/SATA), one middle drive cage (SAS/SATA), one 24i RAID adapter

Note: This configuration supports one middle 3.5-inch SAS/SATA drive cage and one rear 3.5-inch SAS/SATA drive cage (scenario 1) or rear 2.5-inch SAS/SATA drive cage (scenario 2). The following illustration shows the cable connections for scenario 1. The cable connections are the same for scenario 2.

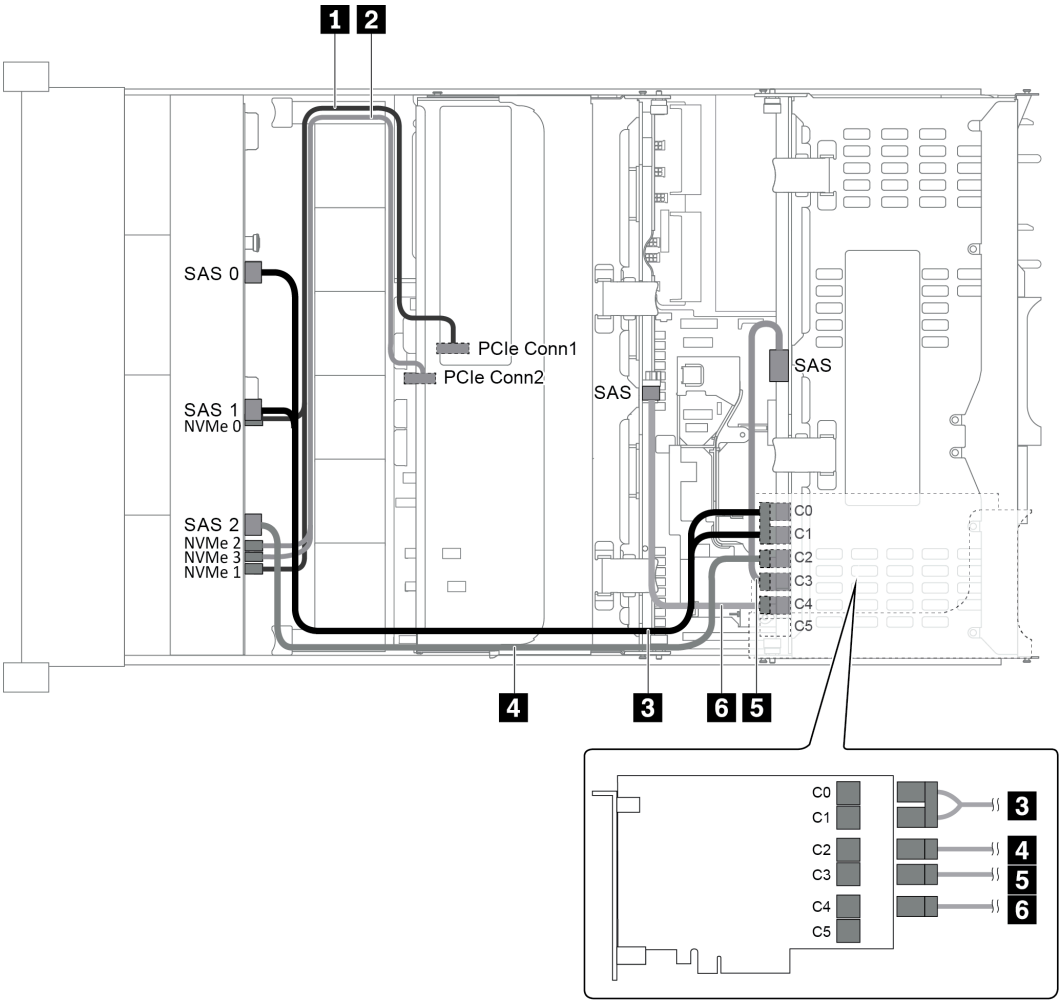

Figure 56. Cable routing for configuration with one 12 x 3.5" AnyBay front backplane, one rear drive cage, one middle drive cage, and one 24i RAID adapter

Cable	From	To
1 NVMe signal cable	NVMe 0 and NVMe 1 connectors on the front backplane	PCIe connector 1 on the system board
2 NVMe signal cable	NVMe 2 and NVMe 3 connectors on the front backplane	PCIe connector 2 on the system board
3 SAS signal cable	SAS 0 connector on the front backplane	Connector C0 on the 24i RAID adapter
	SAS 1 connector on the front backplane	Connector C1 on the 24i RAID adapter
4 SAS signal cable	SAS 2 connector on the front backplane	Connector C2 on the 24i RAID adapter
5 SAS signal cable	SAS connector on the rear backplane	Connector C3 on the 24i RAID adapter
6 SAS signal cable	SAS connector on the middle backplane	Connector C4 on the 24i RAID adapter

Note: With a RAID or HBA adapter connected to the 12 x 3.5-inch AnyBay backplane, drives 0-7 support SATA or SAS drives, and drives 8-11 support SATA, SAS, or NVMe drives.

Configuration 6: one 12 x 3.5" AnyBay front backplane, one rear drive cage (SAS/SATA), one middle drive cage (SAS/SATA), two RAID/HBA adapters (8i+16i)

Note: This configuration supports one middle 3.5-inch SAS/SATA drive cage and one rear 3.5-inch SAS/SATA drive cage (scenario 1) or rear 2.5-inch SAS/SATA drive cage (scenario 2). The following illustration shows the cable connections for scenario 1. The cable connections are the same for scenario 2.

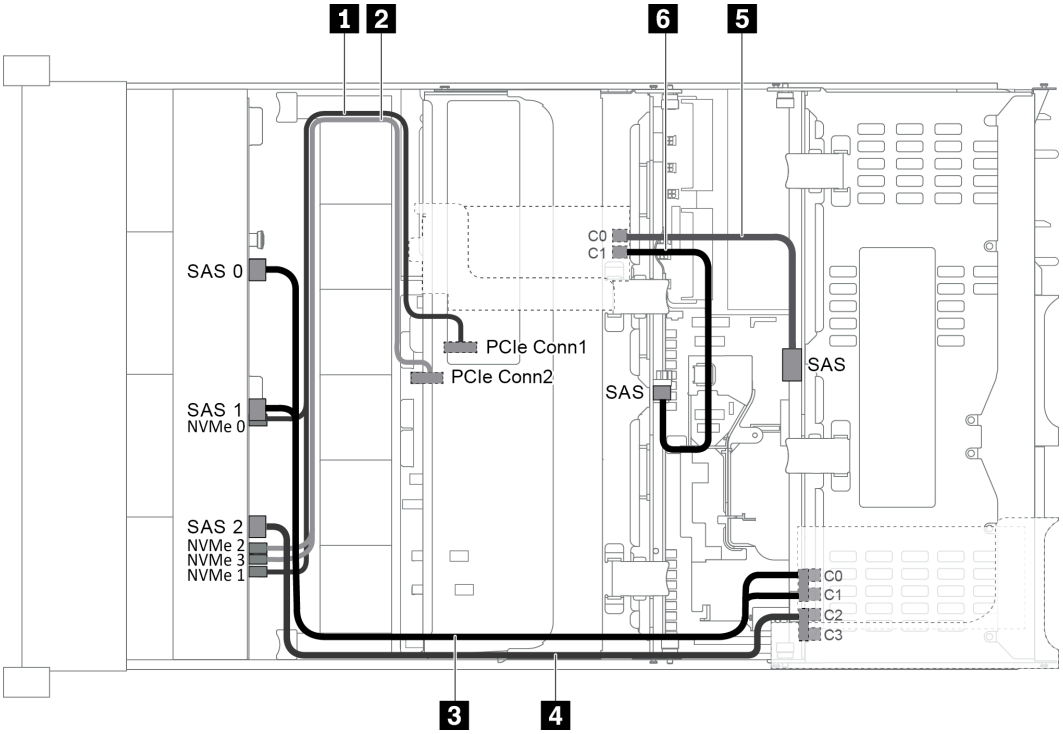

Figure 57. Cable routing for configuration with one 12 x 3.5" AnyBay front backplane, one rear drive cage, one middle drive cage, and two RAID/HBA adapters (8i+16i)

Note: When a Gen 4 RAID/HBA adapter is installed, ensure that you use the corresponding Gen 4 cable:

For cable 3 and 4: **ThinkSystem SR655 3.5" SAS/SATA 12-Bay X40 RAID Cable Kit**

For cable 5 and 6: **ThinkSystem SR655 2.5" & 3.5" SAS/SATA 4-Bay Rear Backplane X40 RAID Cable Kit**

Cable	From	To
1 NVMe signal cable	NVMe 0 and NVMe 1 connectors on the front backplane	PCIe connector 1 on the system board
2 NVMe signal cable	NVMe 2 and NVMe 3 connectors on the front backplane	PCIe connector 2 on the system board
3 SAS signal cable	SAS 0 connector on the front backplane	The 16i RAID/HBA adapter • Gen 3：C0 • Gen 4：C0
	SAS 1 connector on the front backplane	The 16i RAID/HBA adapter • Gen 3：C1 • Gen 4：C0

Cable	From	To
4 SAS signal cable	SAS 2 connector on the front backplane	The 16i RAID/HBA adapter • Gen 3：C2 • Gen 4：C1
5 SAS signal cable	SAS connector on the rear backplane	The 8i RAID/HBA adapter • Gen 3：C0 • Gen 4：C0
6 SAS signal cable	SAS connector on the middle backplane	The 8i RAID/HBA adapter • Gen 3：C1 • Gen 4：C0

Note: With a RAID or HBA adapter connected to the 12 x 3.5-inch AnyBay backplane, drives 0-7 support SATA or SAS drives, and drives 8-11 support SATA, SAS, or NVMe drives.

Configuration 7: one 12 x 3.5" AnyBay front backplane, one rear drive cage (SAS/SATA), one middle drive cage (SAS/SATA), one 32i RAID adapter

Note: This configuration supports one middle 3.5-inch SAS/SATA drive cage and one rear 3.5-inch SAS/SATA drive cage (scenario 1) or rear 2.5-inch SAS/SATA drive cage (scenario 2). The following illustration shows the cable connections for scenario 1. The cable connections are the same for scenario 2.

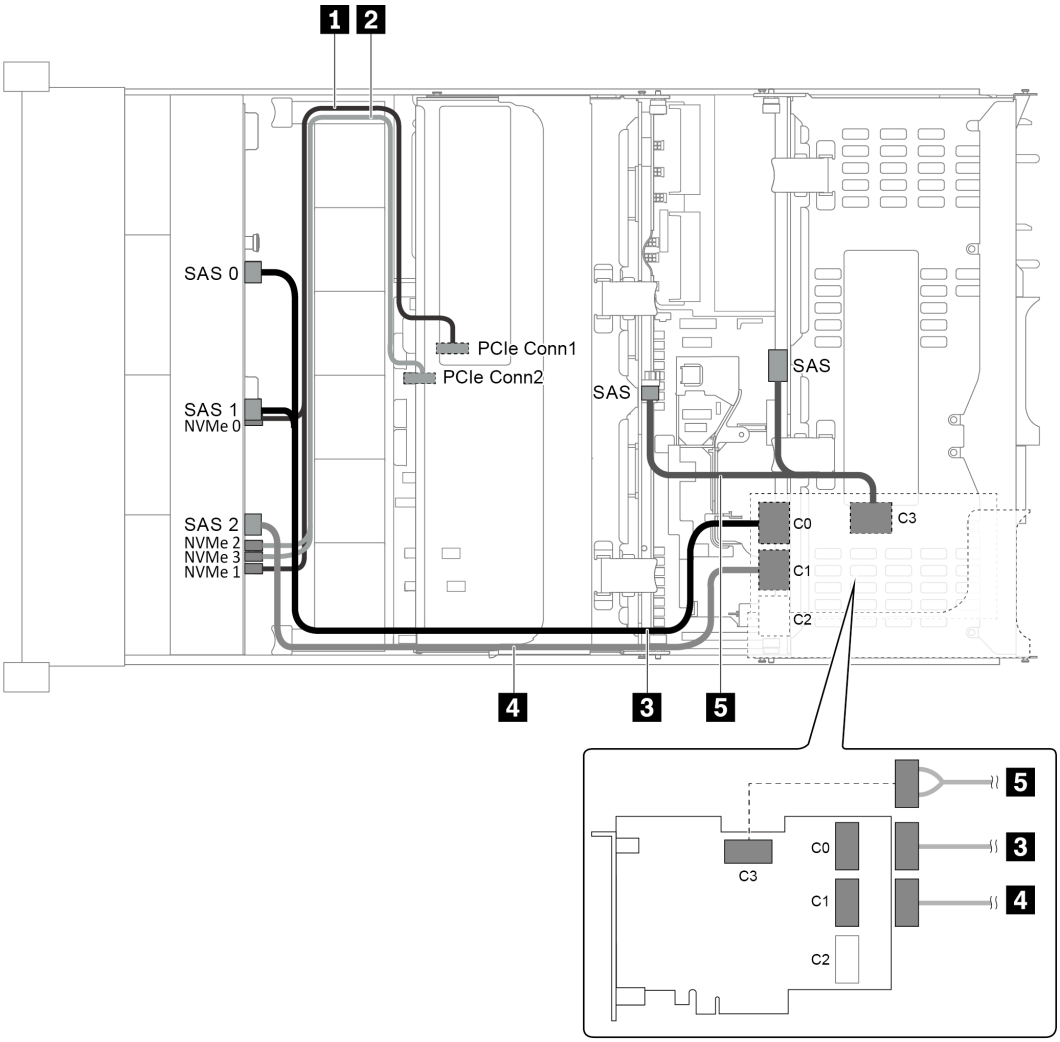

Figure 58. Cable routing for configuration with one 12 x 3.5" AnyBay front backplane, one rear drive cage, one middle drive cage, and one 32i RAID adapter

Note: The 32i RAID adapter belongs to Gen 4. Ensure that you use the corresponding Gen 4 cable:

For cable 3 and 4: **ThinkSystem SR655 3.5" SAS/SATA 12-Bay X40 RAID Cable Kit**

For cable 5: **ThinkSystem SR655 2.5" & 3.5" SAS/SATA 4-Bay Rear Backplane X40 RAID Cable Kit**

Cable	From	To
1 NVMe signal cable	NVMe 0 and NVMe 1 connectors on the front backplane	PCIe connector 1 on the system board
2 NVMe signal cable	NVMe 2 and NVMe 3 connectors on the front backplane	PCIe connector 2 on the system board
3 SAS signal cable	SAS 0 and SAS 1 connectors on the front backplane	Connector C0 on the 32i RAID adapter
4 SAS signal cable	SAS 2 connector on the front backplane	Connector C1 on the 32i RAID adapter
5 SAS signal cable	SAS connector on the rear backplane	Connector C3 on the 32i RAID adapter

Cable	From	To
	SAS connector on the middle backplane	

Note: With a RAID or HBA adapter connected to the 12 x 3.5-inch AnyBay backplane, drives 0-7 support SATA or SAS drives, and drives 8-11 support SATA, SAS, or NVMe drives.

Server model with 8 x 2.5-inch front drive bays (SAS/SATA or NVMe)

This section provides cable routing information for the server model with one 8 x 2.5-inch SAS/SATA front backplane or one 8 x 2.5-inch NVMe front backplane.

- "Configuration 1: one 8 x 2.5" SAS/SATA front backplane, one 8i RAID/HBA adapter" on page 76
- "Configuration 2: one 8 x 2.5" NVMe front backplane, onboard connections" on page 77

Configuration 1: one 8 x 2.5" SAS/SATA front backplane, one 8i RAID/HBA adapter

Note: The RAID/HBA adapter can be installed on the internal riser card (scenario 1) or riser card 1 (scenario 2). The following illustration shows the cable connections for scenario 1. The cable connections are the same for scenario 2.

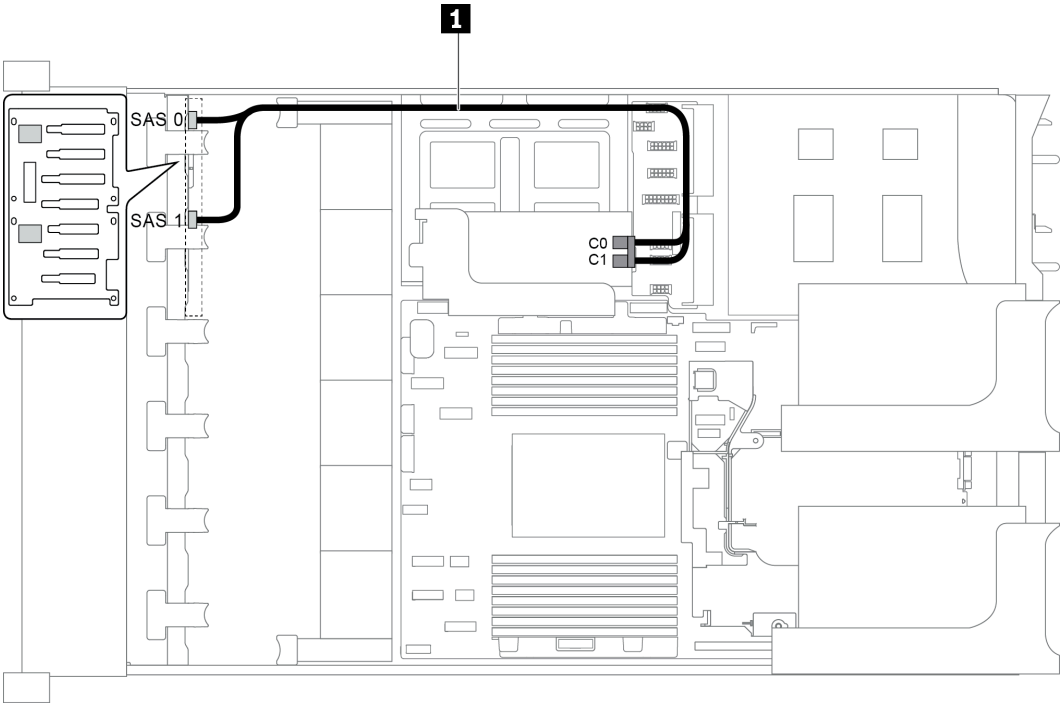

Figure 59. Cable routing for configuration with one 8 x 2.5" SAS/SATA front backplane, one 8i RAID/HBA adapter

Note: When a Gen 4 RAID/HBA adapter is installed, ensure that you use the corresponding Gen 4 cable:

ThinkSystem SR655 2.5" SAS/SATA 8-Bay X40 RAID

Cable	From	To
1 SAS signal cable	SAS 0 connector on the backplane	The RAID/HBA adapter • Gen 3 : C0 • Gen 4 : C0

Cable	From	To
	SAS 1 connector on the backplane	The RAID/HBA adapter • Gen 3 : C1 • Gen 4 : C0

Configuration 2: one 8 x 2.5" NVMe front backplane, onboard connections

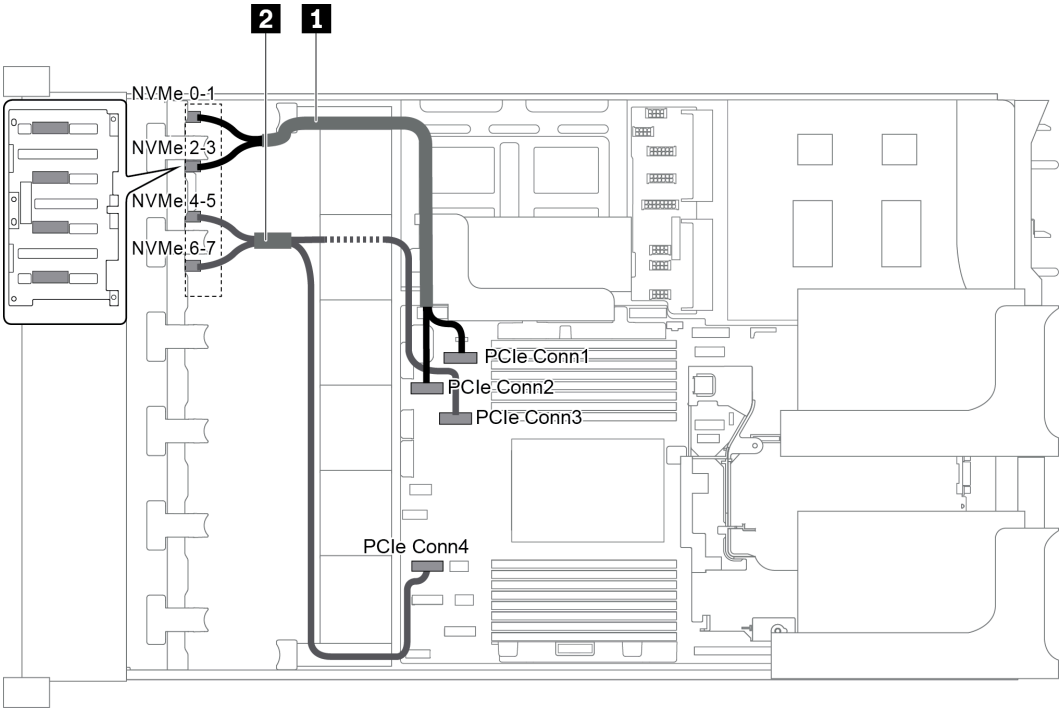

Figure 60. Cable routing for configuration with one 8 x 2.5 NVMe front backplane

Cable	From	To
1 NVMe signal cable	NVMe 0-1 connector on the backplane	PCIe connector 1 on the system board
	NVMe 2-3 connector on the backplane	PCIe connector 2 on the system board
2 NVMe signal cable	NVMe 4-5 connector on the backplane	PCIe connector 3 on the system board
	NVMe 6-7 connector on the backplane	PCIe connector 4 on the system board

Server model with 16 x 2.5-inch front drive bays (SAS/SATA)

This section provides cable routing information for the server model with two 8 x 2.5-inch SAS/SATA front drive backplanes.

- "Configuration 1: two 8 x 2.5" SAS/SATA front backplanes, onboard connections" on page 78
- "Configuration 2: two 8 x 2.5" SAS/SATA front backplanes, one 16i RAID/HBA adapter" on page 79
- "Configuration 3: two 8 x 2.5" SAS/SATA front backplanes, two 8i RAID/HBA adapters" on page 80
- "Configuration 4: two 8 x 2.5" SAS/SATA front backplanes, one rear drive cage (SAS/SATA), one 24i RAID adapter" on page 80
- "Configuration 5: two 8 x 2.5" SAS/SATA front backplanes, one rear drive cage (SAS/SATA), two RAID/HBA adapters (8i+16i)" on page 81

- “Configuration 6: two 8 x 2.5" SAS/SATA front backplanes, one rear drive cage (SAS/SATA), three 8i RAID/HBA adapters” on page 83
- “Configuration 7: two 8 x 2.5" SAS/SATA front backplanes, one rear drive cage (SAS/SATA), one 32i RAID adapter” on page 84

Configuration 1: two 8 x 2.5" SAS/SATA front backplanes, onboard connections

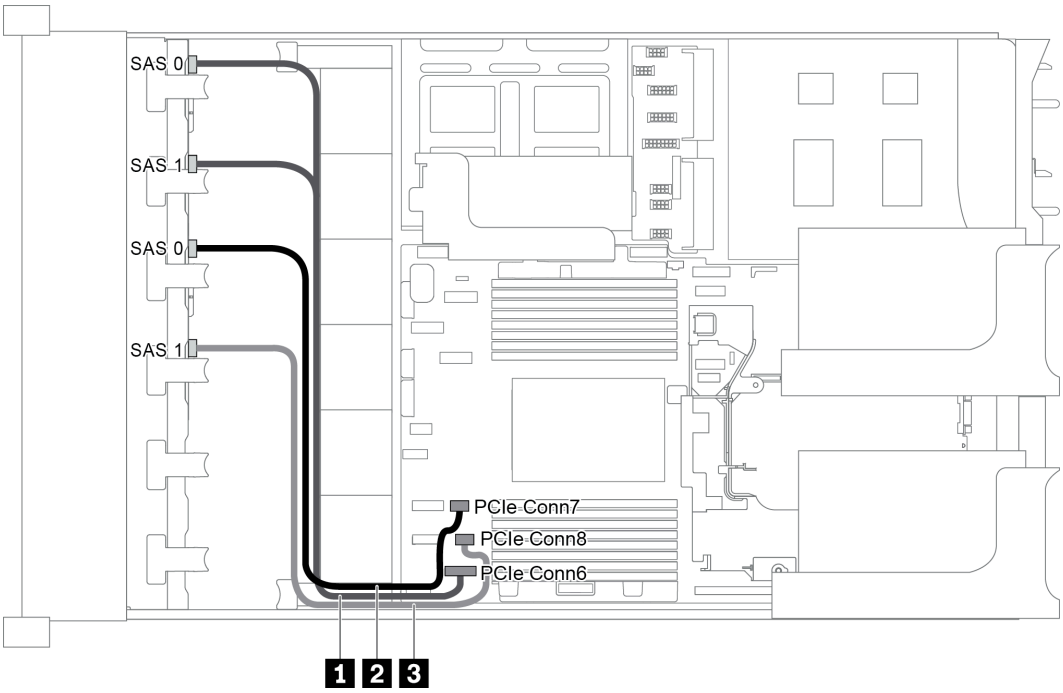

Figure 61. Cable routing for configuration with two 8 x 2.5" SAS/SATA front backplanes

Cable	From	To
1 SAS signal cable	SAS 0 and SAS 1 connectors on the backplane 1	PCIe connector 6 on the system board
2 SAS signal cable	SAS 0 connector on the backplane 2	PCIe connector 7 on the system board
3 SAS signal cable	SAS 1 connector on the backplane 2	PCIe connector 8 on the system board

Note: When the SAS/SATA backplanes are connected to PCIe connectors on the system board, only SATA drives are supported, SAS drives not supported.

Configuration 2: two 8 x 2.5" SAS/SATA front backplanes, one 16i RAID/HBA adapter

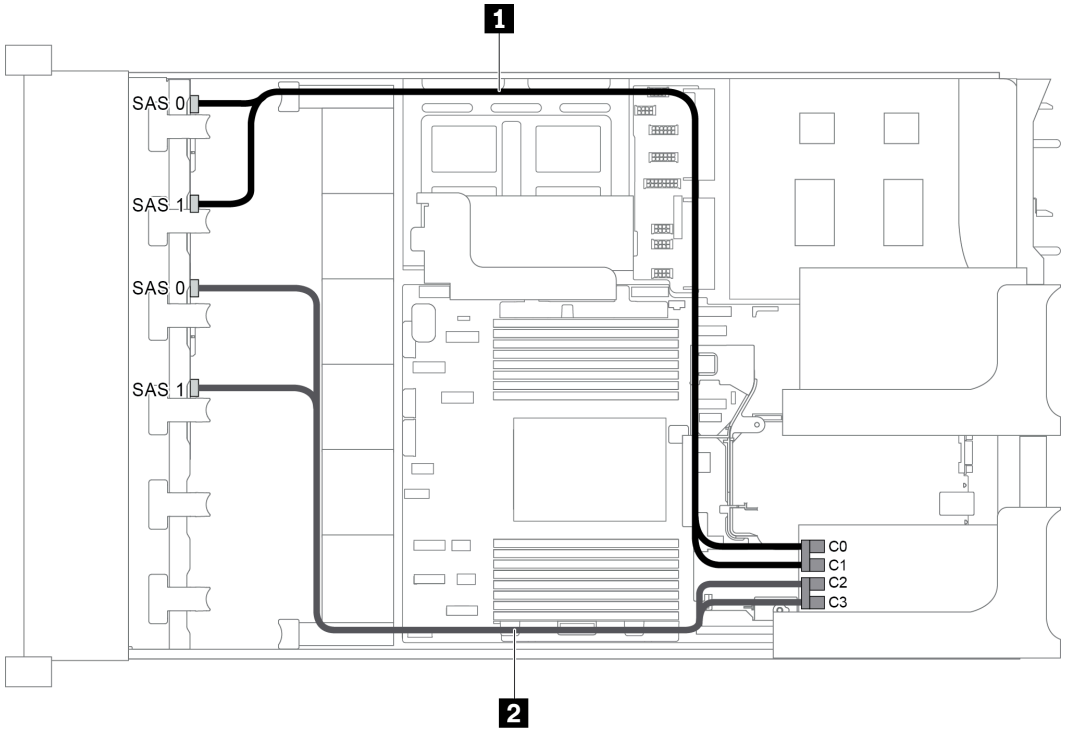

Figure 62. Cable routing for configuration with two 8 x 2.5" SAS/SATA front backplanes and one 16i RAID/HBA adapter

Note: When a Gen 4 RAID/HBA adapter is installed, ensure that you use the corresponding Gen 4 cable:

ThinkSystem SR655 2.5" SAS/SATA 8-Bay X40 RAID

Cable	From	To
1 SAS signal cable	SAS 0 connector on the backplane 1	The RAID/HBA adapter • Gen 3：C0 • Gen 4：C0
	SAS 1 connector on the backplane 1	The RAID/HBA adapter • Gen 3：C1 • Gen 4：C0
2 SAS signal cable	SAS 0 connector on the backplane 2	The RAID/HBA adapter • Gen 3：C2 • Gen 4：C1
	SAS 1 connector on the backplane 2	The RAID/HBA adapter • Gen 3：C3 • Gen 4：C1

Configuration 3: two 8 x 2.5" SAS/SATA front backplanes, two 8i RAID/HBA adapters

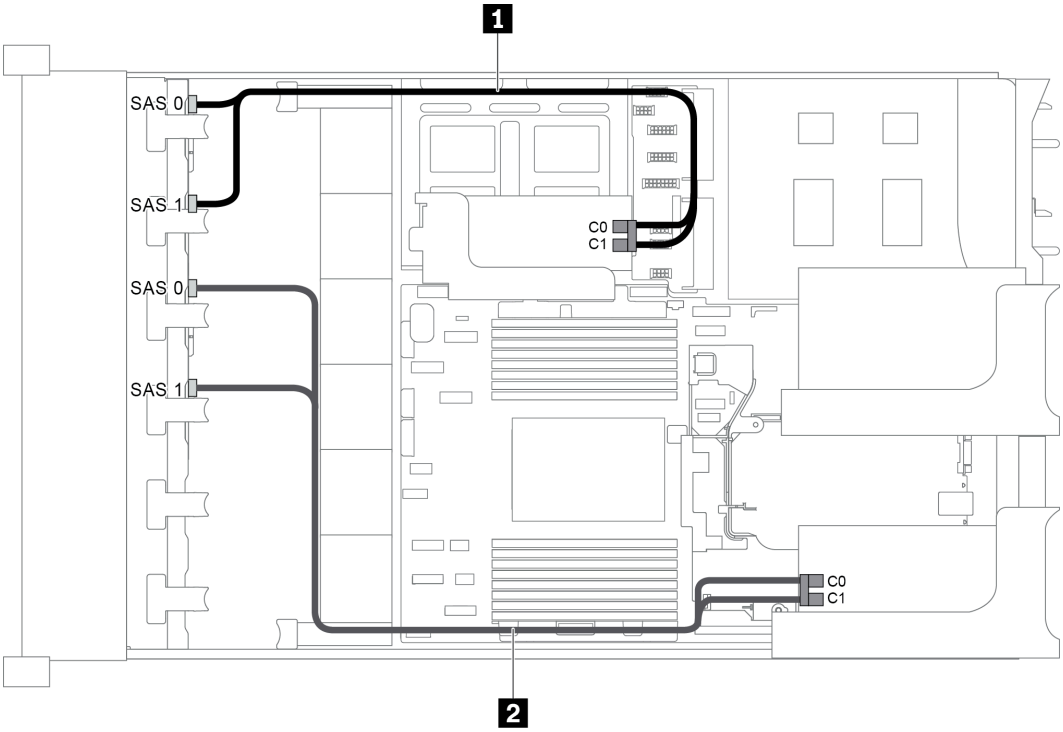

Figure 63. Cable routing for configuration with two 8 x 2.5" SAS/SATA front backplanes and two 8i RAID/HBA adapters

Note: When a Gen 4 RAID/HBA adapter is installed, ensure that you use the corresponding Gen 4 cable:

ThinkSystem SR655 2.5" SAS/SATA 8-Bay X40 RAID

Cable	From	To
1 SAS signal cable	SAS 0 connector on the backplane 1	The RAID/HBA adapter on the internal riser card • Gen 3：C0 • Gen 4：C0
	SAS 1 connector on the backplane 1	The RAID/HBA adapter on the internal riser card • Gen 3：C1 • Gen 4：C0
2 SAS signal cable	SAS 0 connector on the backplane 2	The RAID/HBA adapter on the internal riser card • Gen 3：C0 • Gen 4：C0
	SAS 1 connector on the backplane 2	The RAID/HBA adapter on the internal riser card • Gen 3：C1 • Gen 4：C0

Configuration 4: two 8 x 2.5" SAS/SATA front backplanes, one rear drive cage (SAS/SATA), one 24i RAID adapter

This configuration supports one rear 2.5-inch drive cage with a 4 x 2.5-inch SAS/SATA drive backplane.

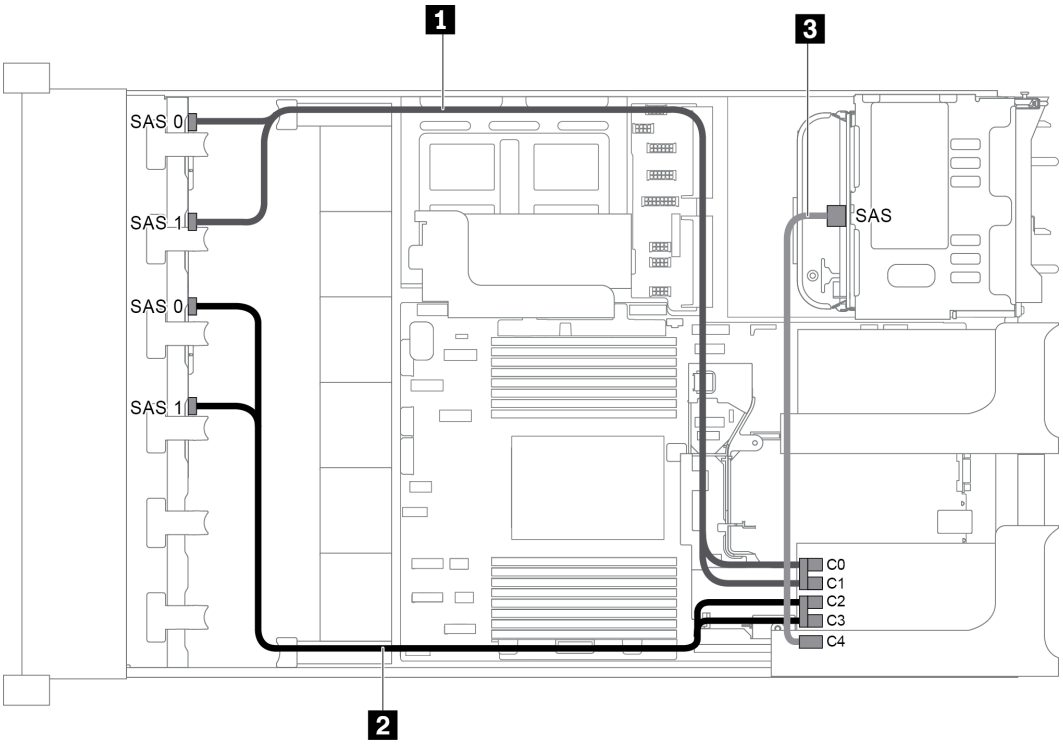

Figure 64. Cable routing for configuration with two 8 x 2.5" SAS/SATA front backplanes, one rear drive cage, and one 24i RAID adapter

Cable	From	To
1 SAS signal cable	SAS 0 connector on the front backplane 1	Connector C0 on the 24i RAID adapter
	SAS 1 connector on the front backplane 1	Connector C1 on the 24i RAID adapter
2 SAS signal cable	SAS 0 connector on the front backplane 2	Connector C2 on the 24i RAID adapter
	SAS 1 connector on the front backplane 2	Connector C3 on the 24i RAID adapter
3 SAS signal cable	SAS connector on the rear backplane	Connector C4 on the 24i RAID adapter

Configuration 5: two 8 x 2.5" SAS/SATA front backplanes, one rear drive cage (SAS/SATA), two RAID/HBA adapters (8i+16i)

This configuration supports one rear 2.5-inch drive cage with a 4 x 2.5-inch SAS/SATA drive backplane.

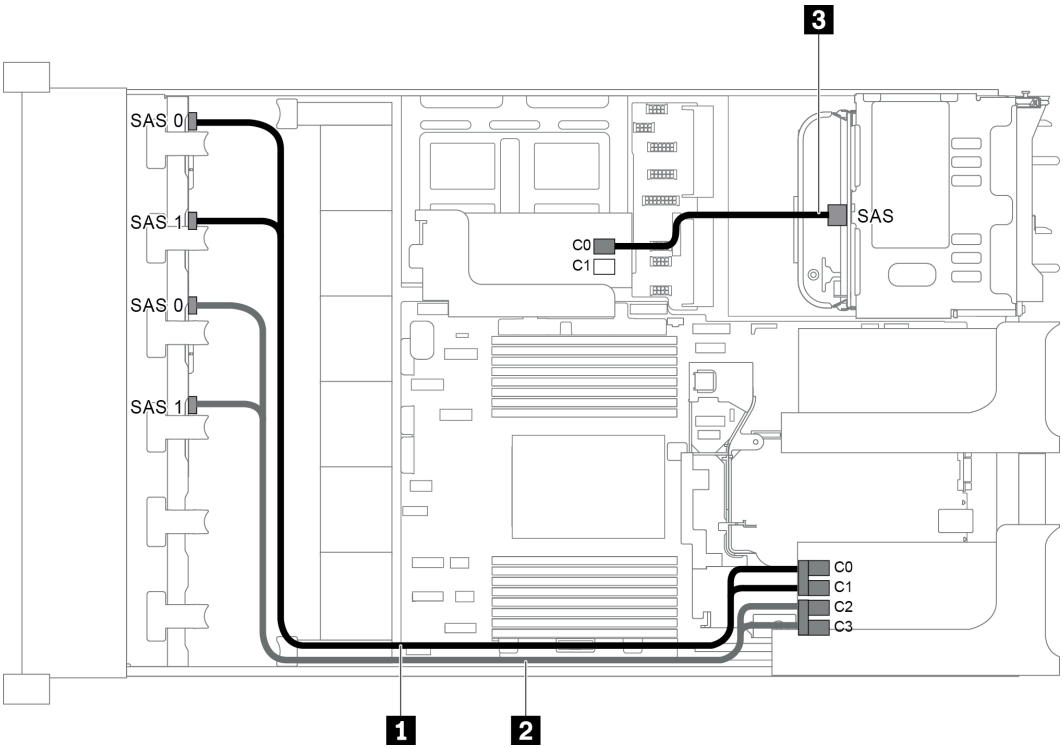

Figure 65. Cable routing for configuration with two 8 x 2.5" SAS/SATA front backplanes, one rear drive cage, and two RAID/HBA adapters (8i+16i)

Note: When a Gen 4 RAID/HBA adapter is installed, ensure that you use the corresponding Gen 4 cable:

For cable 1 and 2: **ThinkSystem SR655 2.5" SAS/SATA 8-Bay X40 RAID**

For cable 3: **ThinkSystem SR655 2.5" & 3.5" SAS/SATA 4-Bay Rear Backplane X40 RAID Cable Kit**

Cable	From	To
1 SAS signal cable	SAS 0 connector on the front backplane 1	The 16i RAID/HBA adapter • Gen 3 : C0 • Gen 4 : C0
	SAS 1 connector on the front backplane 1	The 16i RAID/HBA adapter • Gen 3 : C1 • Gen 4 : C0
2 SAS signal cable	SAS 0 connector on the front backplane 2	The 16i RAID/HBA adapter • Gen 3 : C2 • Gen 4 : C1
	SAS 1 connector on the front backplane 2	The 16i RAID/HBA adapter • Gen 3 : C3 • Gen 4 : C1
3 SAS signal cable	SAS connector on the rear backplane	The 8i RAID/HBA adapter • Gen 3 : C0 • Gen 4 : C0

Configuration 6: two 8 x 2.5" SAS/SATA front backplanes, one rear drive cage (SAS/SATA), three 8i RAID/HBA adapters

This configuration supports one rear 2.5-inch drive cage with a 4 x 2.5-inch SAS/SATA drive backplane.

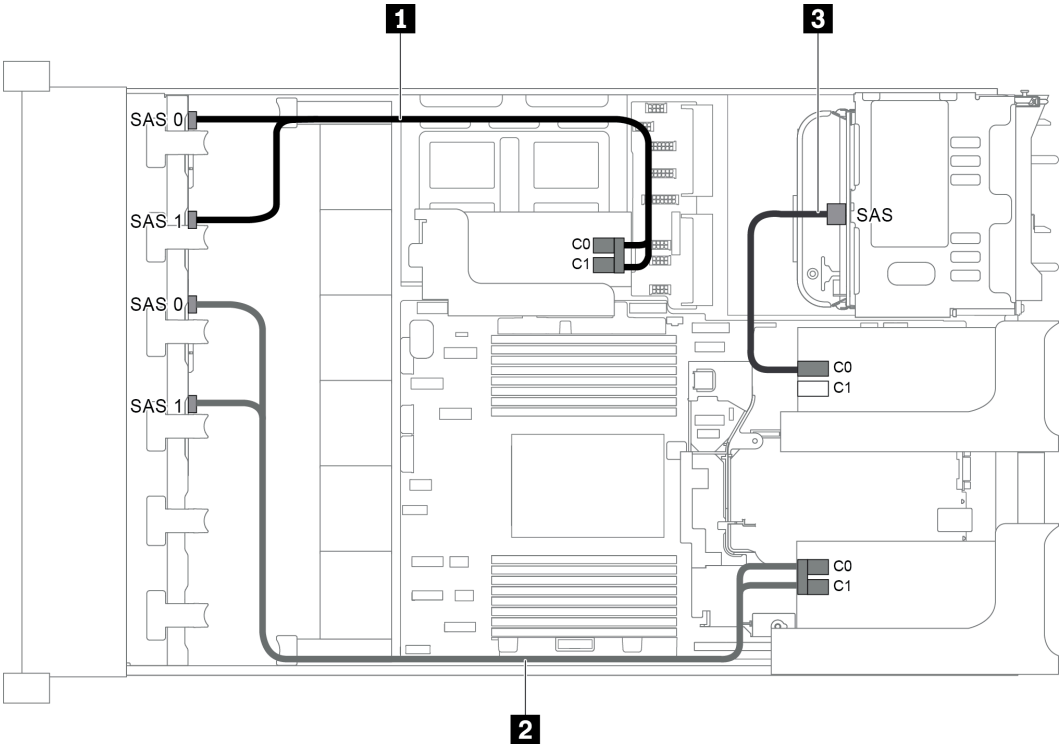

Figure 66. Cable routing for configuration with two 8 x 2.5" SAS/SATA front backplanes, one rear drive cage, and three 8i RAID/HBA adapters

Note: When a Gen 4 RAID/HBA adapter is installed, ensure that you use the corresponding Gen 4 cable:

For cable 1 and 2: **ThinkSystem SR655 2.5" SAS/SATA 8-Bay X40 RAID**

For cable 3: **ThinkSystem SR655 2.5" & 3.5" SAS/SATA 4-Bay Rear Backplane X40 RAID Cable Kit**

Cable	From	To
1 SAS signal cable	SAS 0 connector on the front backplane 1	The 8i RAID/HBA adapter on the internal riser card • Gen 3：C0 • Gen 4：C0
	SAS 1 connector on the front backplane 1	The 8i RAID/HBA adapter on the internal riser card • Gen 3：C1 • Gen 4：C0
2 SAS signal cable	SAS 0 connector on the front backplane 2	The 8i RAID/HBA adapter on riser card 1 • Gen 3：C0 • Gen 4：C0

Cable	From	To
	SAS 1 connector on the front backplane 2	The 8i RAID/HBA adapter on riser card 1 • Gen 3：C1 • Gen 4：C0
3 SAS signal cable	SAS connector on the rear backplane	The 8i RAID/HBA adapter on riser card 2 • Gen 3：C0 • Gen 4：C0

Configuration 7: two 8 x 2.5" SAS/SATA front backplanes, one rear drive cage (SAS/SATA), one 32i RAID adapter

This configuration supports one rear 2.5-inch drive cage with a 4 x 2.5-inch SAS/SATA drive backplane.

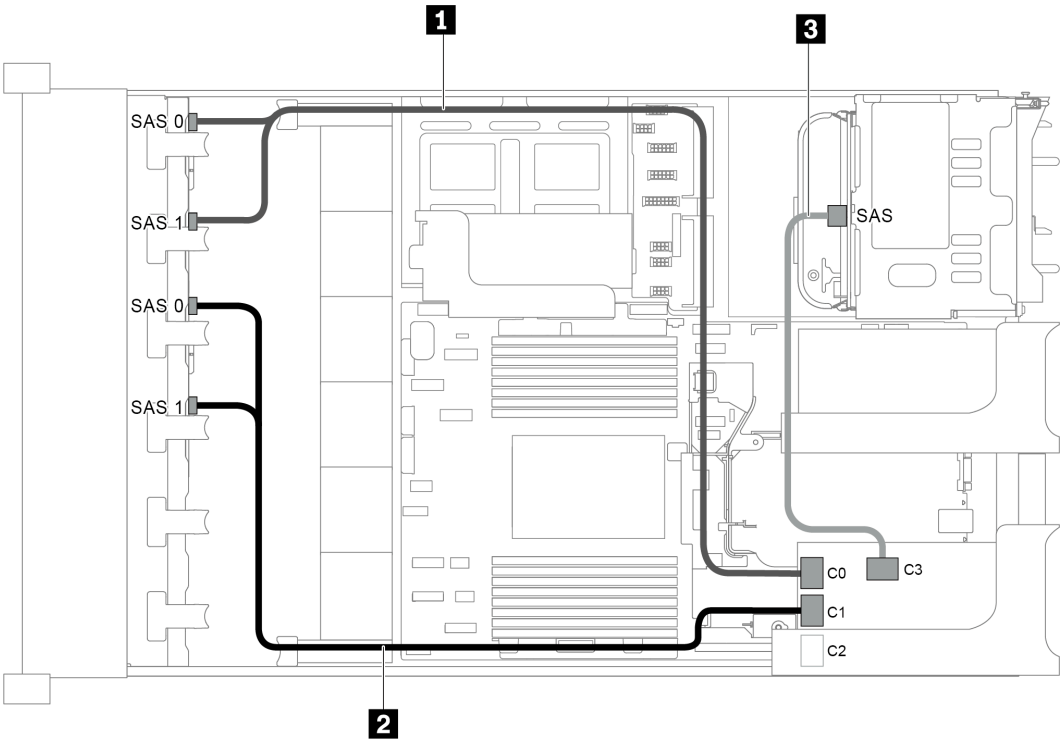

Figure 67. Cable routing for configuration with two 8 x 2.5" SAS/SATA front backplanes, one rear drive cage, and one 32i RAID adapter

Notes: The 32i RAID adapter belongs to Gen 4. Ensure that you use the corresponding Gen 4 cable:

- For cable 1 and 2: **ThinkSystem SR655 2.5" SAS/SATA 8-Bay X40 RAID**
- For cable 3: **ThinkSystem SR655 2.5" & 3.5" SAS/SATA 4-Bay Rear Backplane X40 RAID Cable Kit**

Cable	From	To
1 SAS signal cable	SAS 0 and SAS 1 connectors on the front backplane 1	Connector C0 on the 32i RAID adapter
2 SAS signal cable	SAS 0 and SAS 1 connectors on the front backplane 2	Connector C1 on the 32i RAID adapter
3 SAS signal cable	SAS connector on the rear backplane	Connector C3 on the 32i RAID adapter

Server model with 16 x 2.5-inch front drive bays (8 SAS/SATA + 8 NVMe)

This section provides cable routing information for the server model with one 8 x 2.5-inch SAS/SATA front backplane and one 8 x 2.5-inch NVMe front backplane. The NVMe backplane provides eight NVMe drive bays (bays 0–7).

- "Configuration 1: two front backplanes (8 NVMe + 8 SAS/SATA), onboard connections" on page 85
- "Configuration 2: two front backplanes (8 NVMe + 8 SAS/SATA), one 8i RAID/HBA adapter" on page 86
- "Configuration 3: two front backplanes (8 NVMe + 8 SAS/SATA), one rear drive cage (SAS/SATA), one 16i RAID/HBA adapter" on page 87
- "Configuration 4: two front backplanes (8 NVMe + 8 SAS/SATA), one rear drive cage (SAS/SATA), two 8i RAID/HBA adapters" on page 88

Configuration 1: two front backplanes (8 NVMe + 8 SAS/SATA), onboard connections

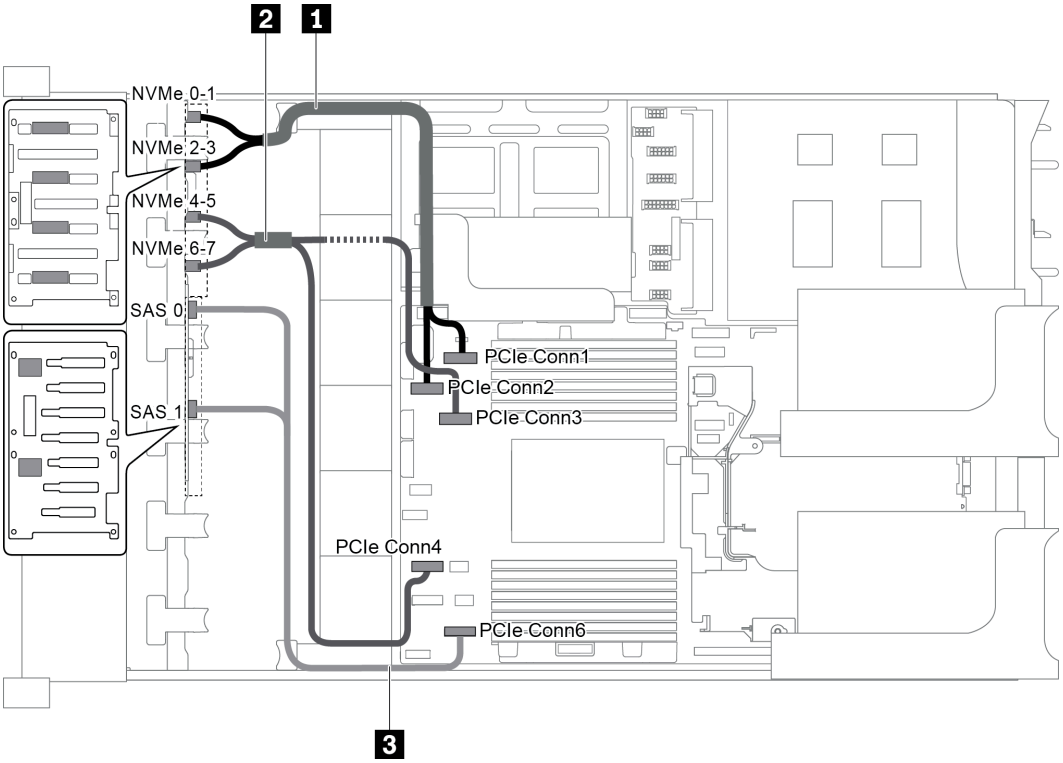

Figure 68. Cable routing for configuration with two front backplanes (8 NVMe + 8 SAS/SATA)

Cable	From	To
1 NVMe signal cable	NVMe 0-1 connector on the NVMe backplane	PCIe connector 1 on the system board
	NVMe 2-3 connector on the NVMe backplane	PCIe connector 2 on the system board
2 NVMe signal cable	NVMe 4-5 connector on the NVMe backplane	PCIe connector 3 on the system board
	NVMe 6-7 connector on the NVMe backplane	PCIe connector 4 on the system board
3 SAS signal cable	SAS 0 and SAS 1 connectors on the SAS/SATA backplane	PCIe connector 6 on the system board

Note: When the SAS/SATA backplane is connected to PCIe connectors on the system board, only SATA drives are supported. No SAS drives are supported.

Configuration 2: two front backplanes (8 NVMe + 8 SAS/SATA), one 8i RAID/HBA adapter

Note: The 8i RAID/HBA adapter can be installed on riser card 1 (scenario 1) or internal riser card (scenario 2). The following illustration shows the cable connections for scenario 1. The cable connections are the same for scenario 2.

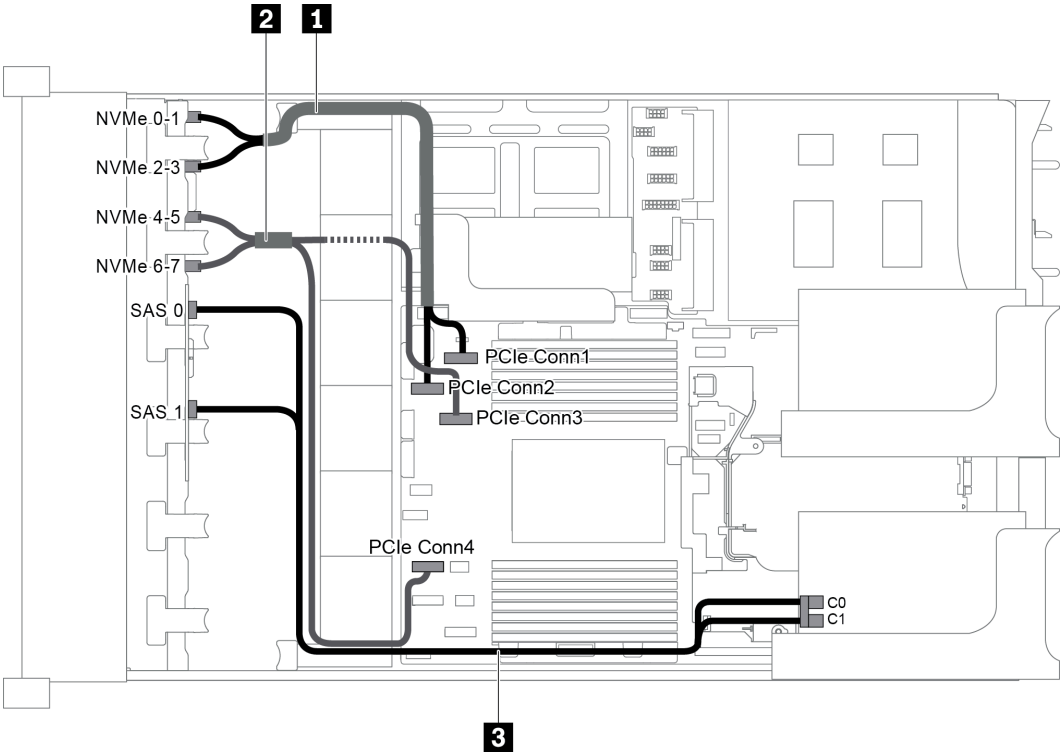

Figure 69. Cable routing for configuration with two front backplanes (8 NVMe + 8 SAS/SATA) and one 8i RAID/HBA adapter

Note: When a Gen 4 RAID/HBA adapter is installed, ensure that you use the corresponding Gen 4 cable:

ThinkSystem SR655 2.5" SAS/SATA 8-Bay X40 RAID Cable Kit

Cable	From	To
1 NVMe signal cable	NVMe 0-1 connector on the NVMe backplane	PCIe connector 1 on the system board
	NVMe 2-3 connector on the NVMe backplane	PCIe connector 2 on the system board
2 NVMe signal cable	NVMe 4-5 connector on the NVMe backplane	PCIe connector 3 on the system board
	NVMe 6-7 connector on the NVMe backplane	PCIe connector 4 on the system board
3 SAS signal cable	SAS 0 connector on the SAS/SATA backplane	The RAID/HBA adapter • Gen 3 : C0 • Gen 4 : C0
	SAS 1 connector on the SAS/SATA backplane	The RAID/HBA adapter • Gen 3 : C1 • Gen 4 : C0

Configuration 3: two front backplanes (8 NVMe + 8 SAS/SATA), one rear drive cage (SAS/SATA), one 16i RAID/HBA adapter

This configuration supports one rear 2.5-inch drive cage with a 4 x 2.5-inch SAS/SATA drive backplane.

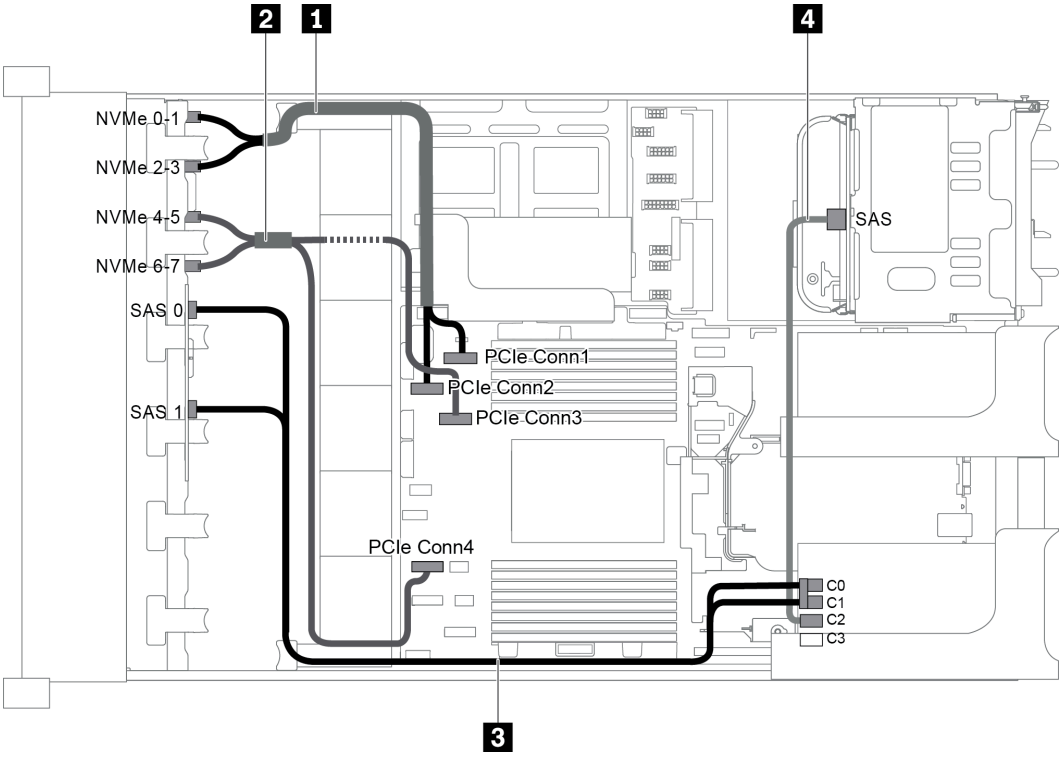

Figure 70. Cable routing for configuration with two front backplanes (8 NVMe + 8 SAS/SATA), one rear drive cage, and one 16i RAID/HBA adapter

Note: When a Gen 4 RAID/HBA adapter is installed, ensure that you use the corresponding Gen 4 cable:

For cable 3: **ThinkSystem SR655 2.5" SAS/SATA 8-Bay X40 RAID Cable Kit**

For cable 4: **ThinkSystem SR655 2.5" & 3.5" SAS/SATA 4-Bay Rear Backplane X40 RAID Cable Kit**

Cable	From	To
1 NVMe signal cable	NVMe 0-1 connector on the NVMe backplane	PCIe connector 1 on the system board
	NVMe 2-3 connector on the NVMe backplane	PCIe connector 2 on the system board
2 NVMe signal cable	NVMe 4-5 connector on the NVMe backplane	PCIe connector 3 on the system board
	NVMe 6-7 connector on the NVMe backplane	PCIe connector 4 on the system board

Cable	From	To
3 SAS signal cable	SAS 0 connector on the SAS/SATA backplane	The RAID/HBA adapter • Gen 3：C0 • Gen 4：C0
	SAS 1 connector on the SAS/SATA backplane	The RAID/HBA adapter • Gen 3：C1 • Gen 4：C0
4 SAS signal cable	SAS connector on the rear backplane	The RAID/HBA adapter • Gen 3：C2 • Gen 4：C1

Configuration 4: two front backplanes (8 NVMe + 8 SAS/SATA), one rear drive cage (SAS/SATA), two 8i RAID/HBA adapters

This configuration supports one rear 2.5-inch drive cage with a 4 x 2.5-inch SAS/SATA drive backplane.

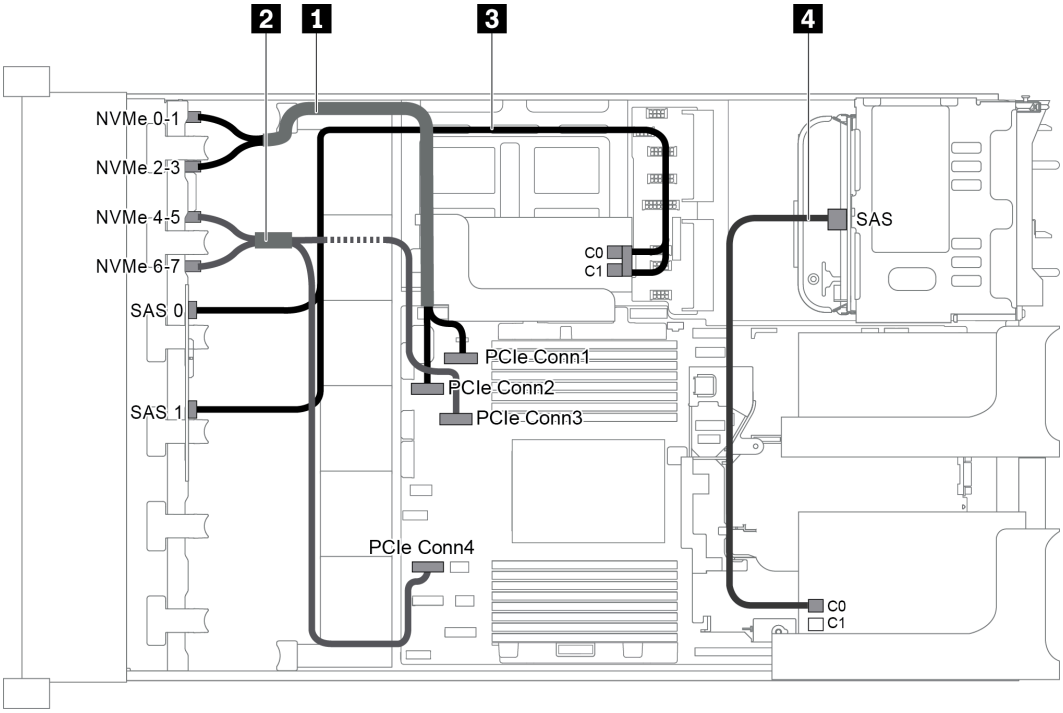

Figure 71. Cable routing for configuration with two front backplanes (8 NVMe + 8 SAS/SATA), one rear drive cage (SAS/SATA), and two 8i RAID/HBA adapters

Note: When a Gen 4 RAID/HBA adapter is installed, ensure that you use the corresponding Gen 4 cable:

For cable 3: **ThinkSystem SR655 2.5" SAS/SATA 8-Bay X40 RAID Cable Kit**

For cable 4: **ThinkSystem SR655 2.5" & 3.5" SAS/SATA 4-Bay Rear Backplane X40 RAID Cable Kit**

Cable	From	To
1 NVMe signal cable	NVMe 0-1 connector on the NVMe backplane	PCIe connector 1 on the system board

Cable	From	To
	NVMe 2-3 connector on the NVMe backplane	PCIe connector 2 on the system board
2 NVMe signal cable	NVMe 4-5 connector on the NVMe backplane	PCIe connector 3 on the system board
	NVMe 6-7 connector on the NVMe backplane	PCIe connector 4 on the system board
3 SAS signal cable	SAS 0 connector on the SAS/SATA backplane	The RAID/HBA adapter on the internal riser card • Gen 3：C0 • Gen 4：C0
	SAS 1 connector on the SAS/SATA backplane	The RAID/HBA adapter on the internal riser card • Gen 3：C1 • Gen 4：C0
4 SAS signal cable	SAS connector on the rear backplane	The RAID/HBA adapter on riser card 1 • Gen 3：C0 • Gen 4：C0

Server model with 16 x 2.5-inch front drive bays (NVMe)

This section provides cable routing information for the server model with two 8 x 2.5-inch NVMe front backplanes.

- “Configuration 1: two 8 x 2.5" NVMe front backplanes, onboard connections” on page 90
- “Configuration 2: two 8 x 2.5" NVMe front backplanes, one rear drive cage (SAS/SATA), one 8i RAID/HBA adapter” on page 90
- “Configuration 3: two 8 x 2.5" NVMe front backplanes, one rear drive cage (NVMe), one 810-4P or 1610–4P NVMe switch card” on page 91

Configuration 1: two 8 x 2.5" NVMe front backplanes, onboard connections

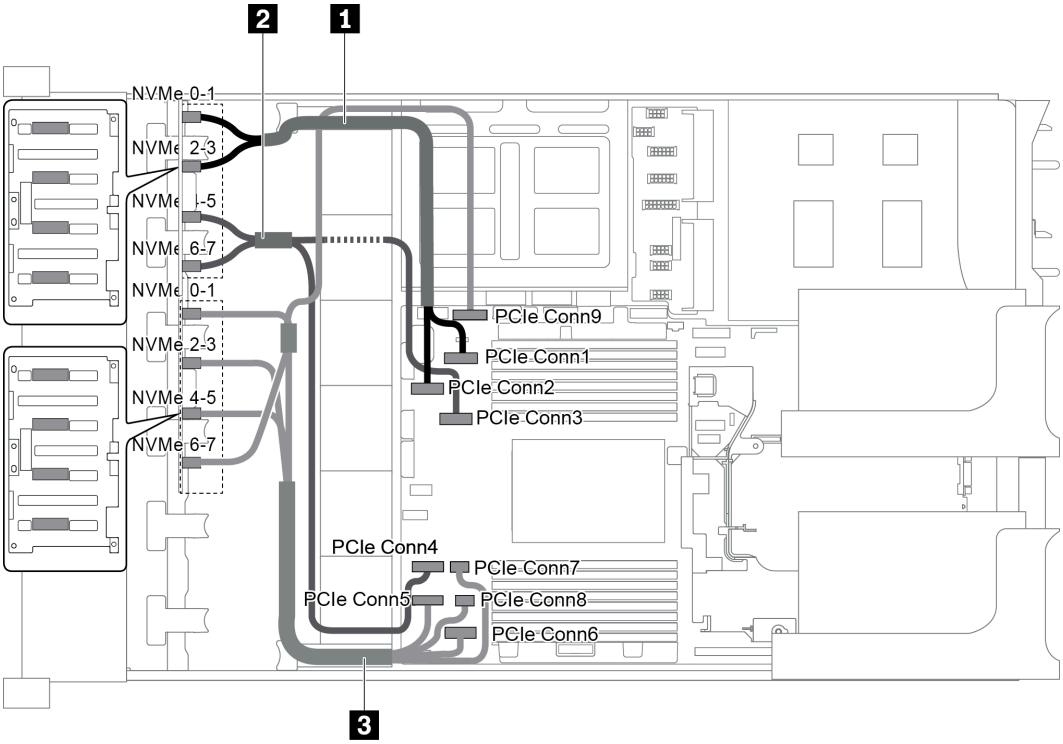

Figure 72. Cable routing for configuration with two 8 x 2.5" NVMe front backplanes

Cable	From	To
1 NVMe signal cable	NVMe 0-1 connector on backplane 1	PCIe connector 1 on the system board
	NVMe 2-3 connector on backplane 1	PCIe connector 2 on the system board
2 NVMe signal cable	NVMe 4-5 connector on backplane 1	PCIe connector 3 on the system board
	NVMe 6-7 connector on backplane 1	PCIe connector 4 on the system board
3 NVMe signal cable	NVMe 0-1 connector on backplane 2	PCIe connector 5 on the system board
	NVMe 2-3 connector on backplane 2	PCIe connector 6 on the system board
	NVMe 4-5 connector on backplane 2	PCIe connectors 7 and 8 on the system board
	NVMe 6-7 connector on backplane 2	PCIe connector 9 on the system board

Configuration 2: two 8 x 2.5" NVMe front backplanes, one rear drive cage (SAS/SATA), one 8i RAID/HBA adapter

This configuration supports one rear drive cage with the 4 x 2.5-inch SAS/SATA drive backplane.

Note: The RAID/HBA adapter can be installed on riser card 1 (scenario 1) or riser card 2 (scenario 2). The following illustration shows the cable connections for scenario 1. The cable connections are the same for scenario 2.

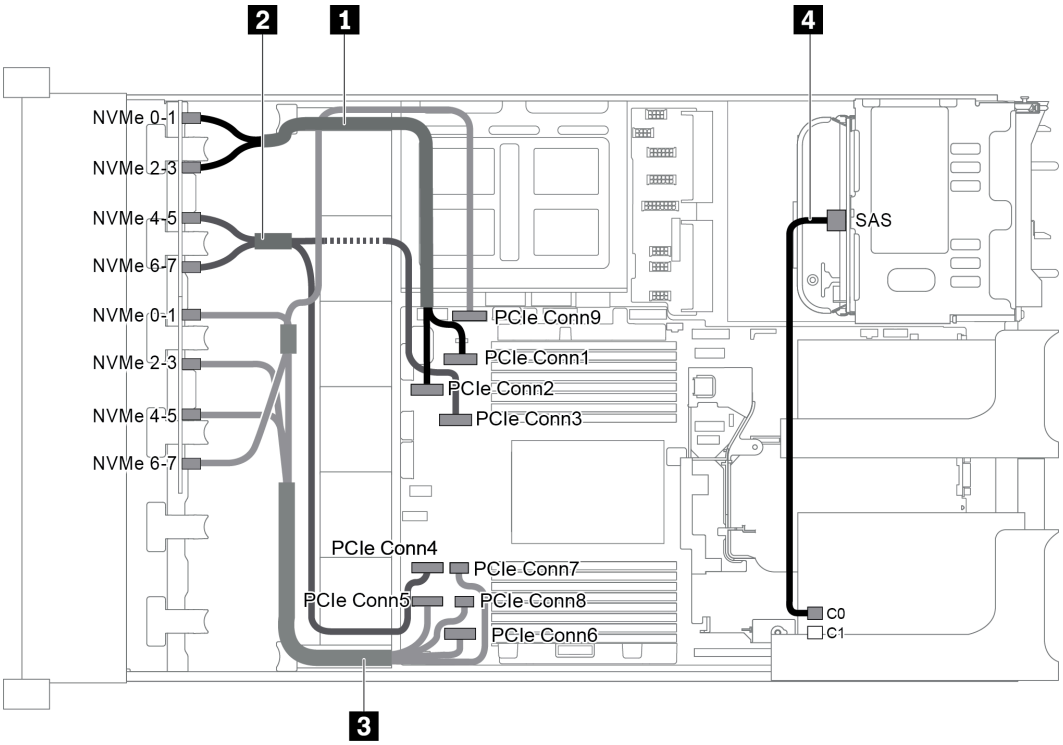

Figure 73. Cable routing for configuration with two 8 x 2.5" NVMe front backplanes, one rear drive cage (SAS/SATA), one 8i RAID/HBA adapter

Cable	From	To
1 NVMe signal cable	NVMe 0-1 connector on backplane 1	PCIe connector 1 on the system board
	NVMe 2-3 connector on backplane 1	PCIe connector 2 on the system board
2 NVMe signal cable	NVMe 4-5 connector on backplane 1	PCIe connector 3 on the system board
	NVMe 6-7 connector on backplane 1	PCIe connector 4 on the system board
3 NVMe signal cable	NVMe 0-1 connector on backplane 2	PCIe connector 5 on the system board
	NVMe 2-3 connector on backplane 2	PCIe connector 6 on the system board
	NVMe 4-5 connector on backplane 2	PCIe connectors 7 and 8 on the system board
	NVMe 6-7 connector on backplane 2	PCIe connector 9 on the system board
4 SAS signal cable	SAS connector on the rear backplane	Connector C0 on the RAID/HBA adapter

Configuration 3: two 8 x 2.5" NVMe front backplanes, one rear drive cage (NVMe), one 810-4P or 1610–4P NVMe switch card

This configuration supports one rear drive cage with the 4 x 2.5-inch NVMe drive backplane.

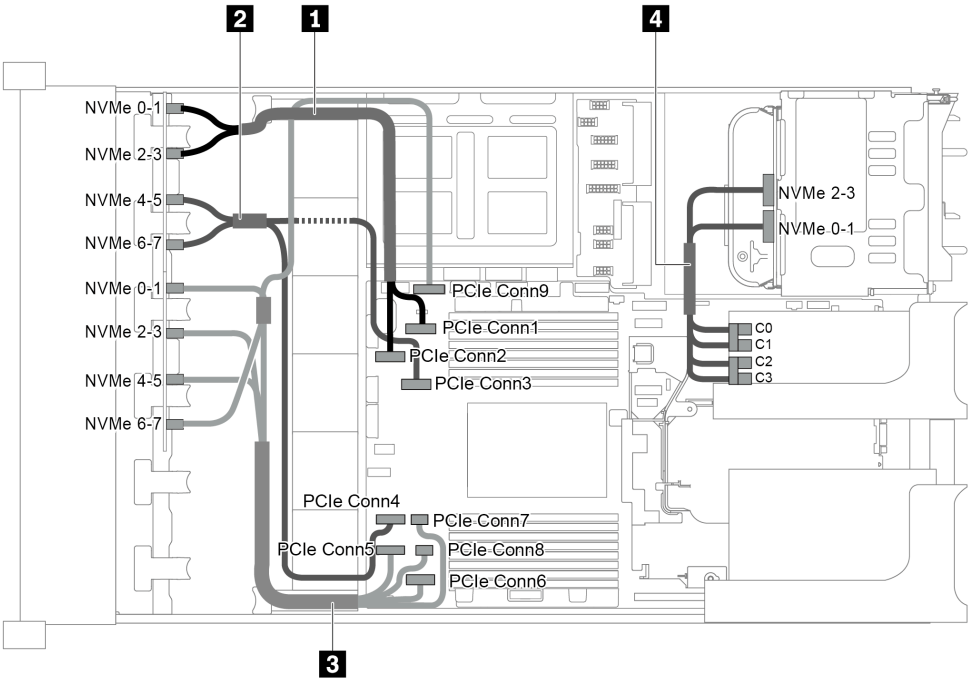

Figure 74. Cable routing for configuration with two 8 x 2.5" NVMe front backplanes, one rear drive cage (NVMe), and one 810-4P or 1610-4P NVMe switch card

Cable	From	To
1 NVMe signal cable	NVMe 0-1 connector on backplane 1	PCIe connector 1 on the system board
	NVMe 2-3 connector on backplane 1	PCIe connector 2 on the system board
2 NVMe signal cable	NVMe 4-5 connector on backplane 1	PCIe connector 3 on the system board
	NVMe 6-7 connector on backplane 1	PCIe connector 4 on the system board
3 NVMe signal cable	NVMe 0-1 connector on backplane 2	PCIe connector 5 on the system board
	NVMe 2-3 connector on backplane 2	PCIe connector 6 on the system board
	NVMe 4-5 connector on backplane 2	PCIe connectors 7 and 8 on the system board
	NVMe 6-7 connector on backplane 2	PCIe connector 9 on the system board
4 NVMe signal cable	NVMe 0-1 connector on the rear backplane	Connectors C0 and C1 on the switch card
	NVMe 2-3 connector on the rear backplane	Connectors C2 and C3 on the switch card

Server model with 24 x 2.5-inch front drive bays (SAS/SATA)

This section provides cable routing information for the server model with three 8 x 2.5-inch SAS/SATA front drive backplanes.

- "Configuration 1: three 8 x 2.5" SAS/SATA front backplanes, one 24i RAID adapter" on page 93
- "Configuration 2: three 8 x 2.5" SAS/SATA front backplanes, two RAID/HBA adapters (8i+16i)" on page 94
- "Configuration 3: three 8 x 2.5" SAS/SATA front backplanes, three 8i RAID/HBA adapters" on page 95
- "Configuration 4: three 8 x 2.5" SAS/SATA front backplanes, one rear drive cage (SAS/SATA), two RAID/HBA adapters (8i+24i)" on page 96

- “Configuration 5: three 8 x 2.5" SAS/SATA front backplanes, one rear drive cage (SAS/SATA), four 8i RAID/HBA adapters” on page 97
- “Configuration 6: three 8 x 2.5" SAS/SATA front backplanes, one middle drive cage (SAS/SATA), two RAID/HBA adapters (8i+24i)” on page 98
- “Configuration 7: three 8 x 2.5" SAS/SATA front backplanes, one middle drive cage (SAS/SATA), four 8i RAID/HBA adapters” on page 100
- “Configuration 8: three 8 x 2.5" SAS/SATA front backplanes, one 32i RAID adapter” on page 102
- “Configuration 9: three 8 x 2.5" SAS/SATA front backplanes, one rear drive cage (SAS/SATA), two RAID/HBA adapters (8i+32i)” on page 102
- “Configuration 10: three 8 x 2.5" SAS/SATA front backplanes, one middle drive cage (SAS/SATA), two RAID/HBA adapters (8i+32i)” on page 103

Configuration 1: three 8 x 2.5" SAS/SATA front backplanes, one 24i RAID adapter

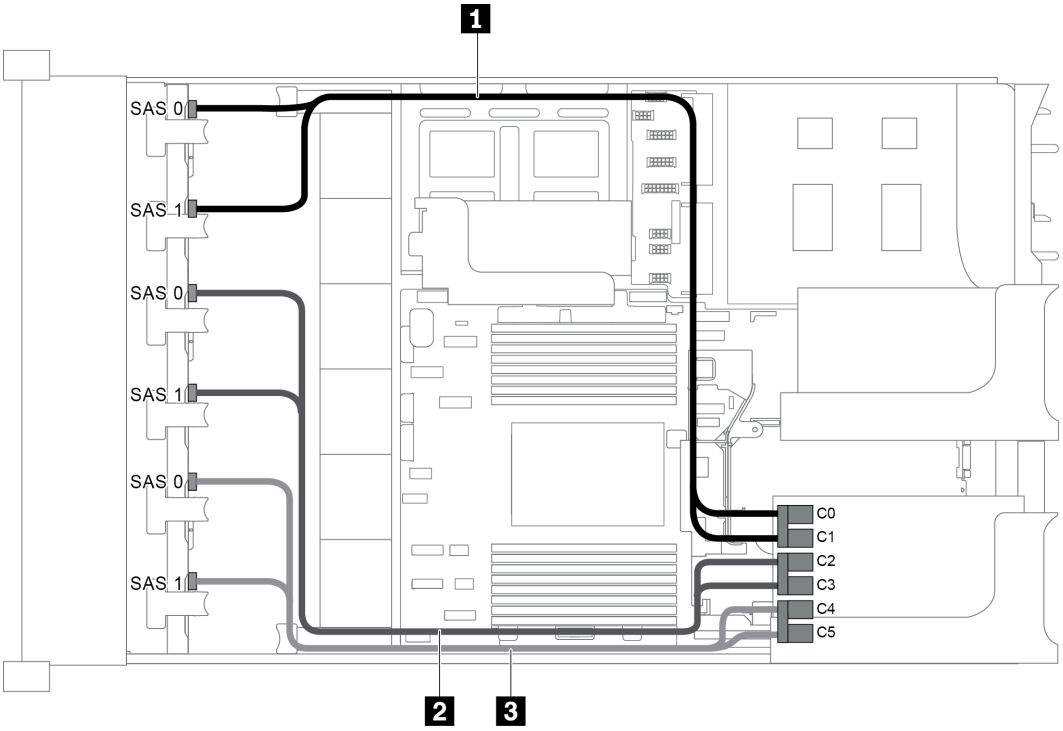

Figure 75. Cable routing for configuration with three 8 x 2.5" SAS/SATA front backplanes and one 24i RAID adapter

Cable	From	To
1 SAS signal cable	SAS 0 connector on the backplane 1	Connector C0 on the 24i RAID adapter
	SAS 1 connector on the backplane 1	Connector C1 on the 24i RAID adapter
2 SAS signal cable	SAS 0 connector on the backplane 2	Connector C2 on the 24i RAID adapter
	SAS 1 connector on the backplane 2	Connector C3 on the 24i RAID adapter
3 SAS signal cable	SAS 0 connector on the backplane 3	Connector C4 on the 24i RAID adapter
	SAS 1 connector on the backplane 3	Connector C5 on the 24i RAID adapter

Configuration 2: three 8 x 2.5" SAS/SATA front backplanes, two RAID/HBA adapters (8i+16i)

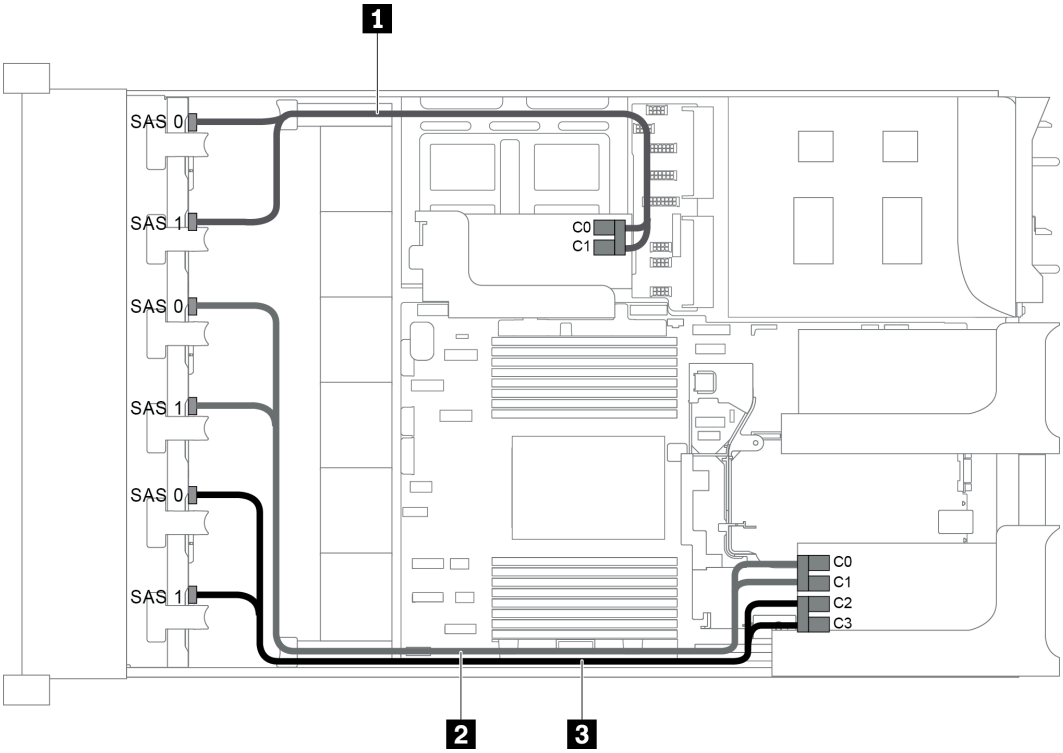

Figure 76. Cable routing for configuration with three 8 x 2.5" SAS/SATA front backplanes and two RAID/HBA adapters (8i +16i)

Note: When a Gen 4 RAID/HBA adapter is installed, ensure that you use the corresponding Gen 4 cable:

ThinkSystem SR655 2.5" SAS/SATA 8-Bay X40 RAID Cable Kit

Cable	From	To
1 SAS signal cable	SAS 0 connector on the backplane 1	The 8i RAID/HBA adapter • Gen 3：C0 • Gen 4：C0
	SAS 1 connector on the backplane 1	The 8i RAID/HBA adapter • Gen 3：C1 • Gen 4：C0
2 SAS signal cable	SAS 0 connector on the backplane 2	The 16i RAID/HBA adapter • Gen 3：C0 • Gen 4：C0
	SAS 1 connector on the backplane 2	The 16i RAID/HBA adapter • Gen 3：C1 • Gen 4：C0
3 SAS signal cable	SAS 0 connector on the backplane 3	The 8i RAID/HBA adapter • Gen 3：C2 • Gen 4：C1

Cable	From	To
	SAS 1 connector on the backplane 3	The 16i RAID/HBA adapter • Gen 3：C3 • Gen 4：C1

Configuration 3: three 8 x 2.5" SAS/SATA front backplanes, three 8i RAID/HBA adapters

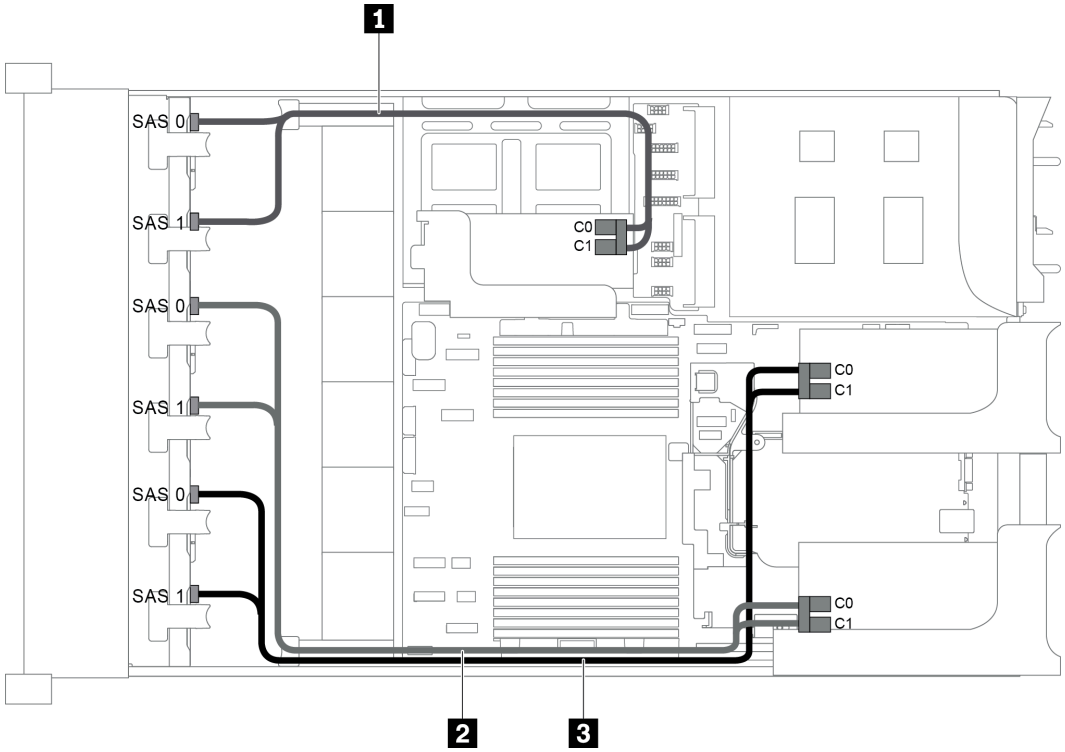

Figure 77. Cable routing for configuration with three 8 x 2.5" SAS/SATA front backplanes and three 8i RAID/HBA adapters

Note: When a Gen 4 RAID/HBA adapter is installed, ensure that you use the corresponding Gen 4 cable:

ThinkSystem SR655 2.5" SAS/SATA 8-Bay X40 RAID Cable Kit

Cable	From	To
1 SAS signal cable	SAS 0 connector on the backplane 1	The 8i RAID/HBA adapter on the internal riser card • Gen 3：C0 • Gen 4：C0
	SAS 1 connector on the backplane 1	The 8i RAID/HBA adapter on the internal riser card • Gen 3：C1 • Gen 4：C0
2 SAS signal cable	SAS 0 connector on the backplane 2	The 8i RAID/HBA adapter on riser card 1 • Gen 3：C0 • Gen 4：C0

Cable	From	To
	SAS 1 connector on the backplane 2	The 8i RAID/HBA adapter on riser card 1 • Gen 3：C1 • Gen 4：C0
3 SAS signal cable	SAS 0 connector on the backplane 3	The 8i RAID/HBA adapter on riser card 2 • Gen 3：C0 • Gen 4：C0
	SAS 1 connector on the backplane 3	The 8i RAID/HBA adapter on riser card 2 • Gen 3：C1 • Gen 4：C0

Configuration 4: three 8 x 2.5" SAS/SATA front backplanes, one rear drive cage (SAS/SATA), two RAID/HBA adapters (8i+24i)

This configuration supports one rear 2.5-inch drive cage with a 4 x 2.5-inch SAS/SATA drive backplane.

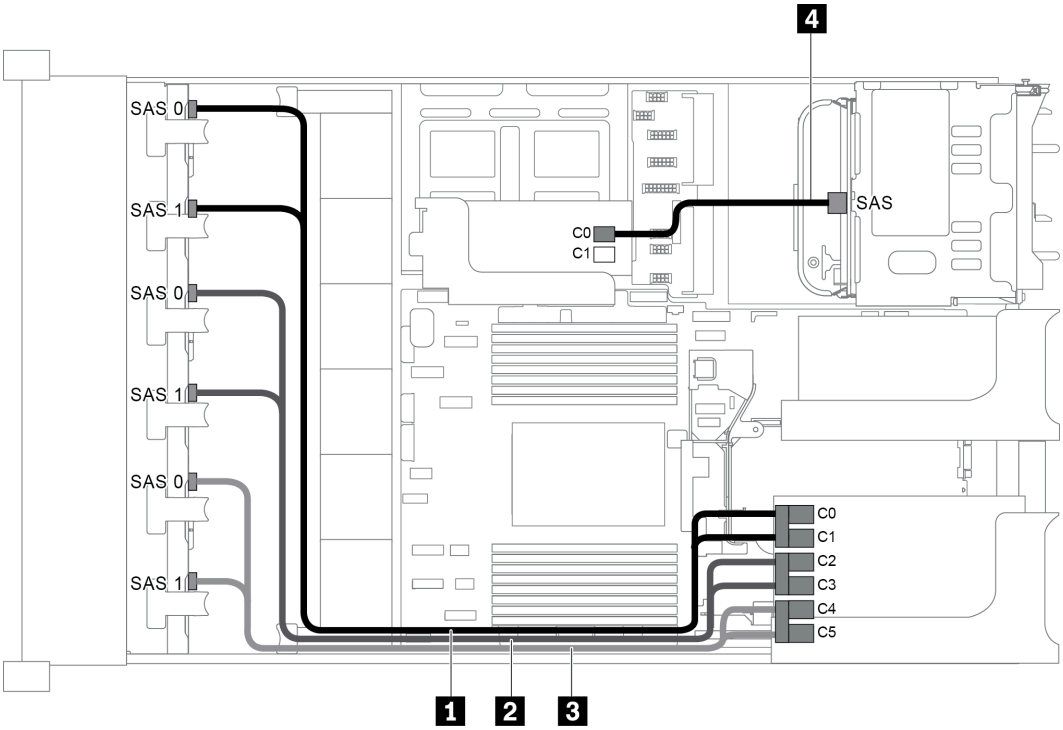

Figure 78. Cable routing for configuration with three 8 x 2.5" SAS/SATA front backplanes, one rear drive cage, and two RAID/HBA adapters (8i+24i)

Cable	From	To
1 SAS signal cable	SAS 0 connector on the backplane 1	Connector C0 on the 24i RAID adapter
	SAS 1 connector on the backplane 1	Connector C1 on the 24i RAID adapter
2 SAS signal cable	SAS 0 connector on the backplane 2	Connector C2 on the 24i RAID adapter
	SAS 1 connector on the backplane 2	Connector C3 on the 24i RAID adapter
3 SAS signal cable	SAS 0 connector on the backplane 3	Connector C4 on the 24i RAID adapter

Cable	From	To
	SAS 1 connector on the backplane 3	Connector C5 on the 24i RAID adapter
4 SAS signal cable	SAS connector on the rear backplane	Connector C0 on the 8i RAID/HBA adapter

Configuration 5: three 8 x 2.5" SAS/SATA front backplanes, one rear drive cage (SAS/SATA), four 8i RAID/HBA adapters

This configuration supports one rear 2.5-inch drive cage with a 4 x 2.5-inch SAS/SATA drive backplane.

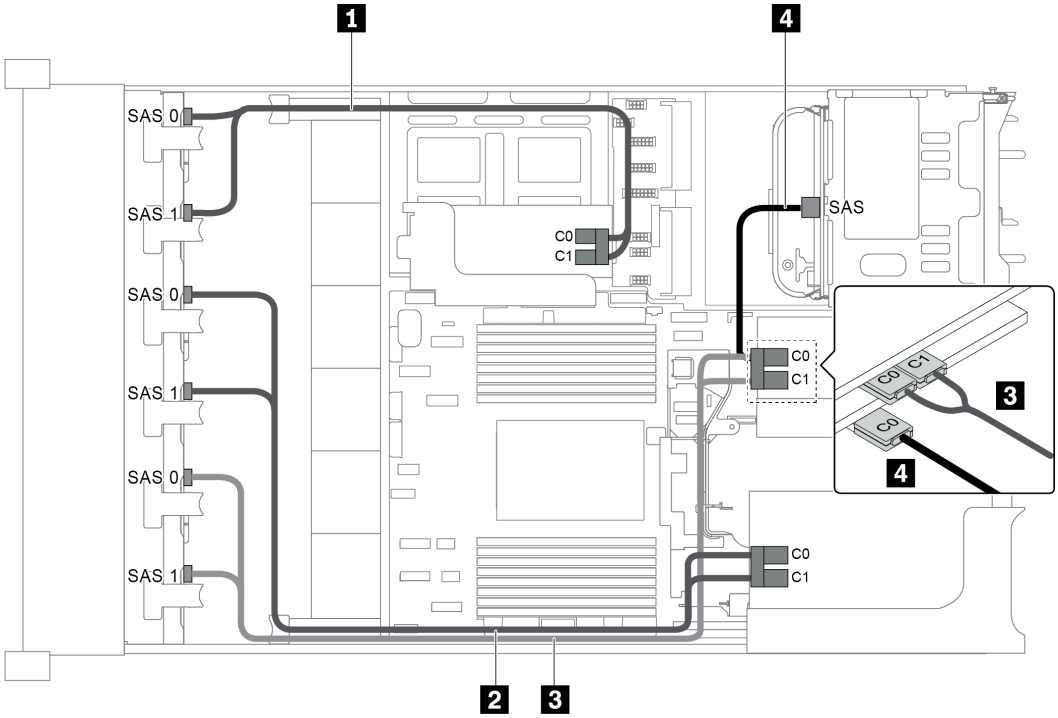

Figure 79. Cable routing for configuration with three 8 x 2.5" SAS/SATA front backplanes, one rear drive cage, and four 8i RAID/HBA adapters

Note: When a Gen 4 RAID/HBA adapter is installed, ensure that you use the corresponding Gen 4 cable:

For cable 1, 2, and 3: **ThinkSystem SR655 2.5" SAS/SATA 8-Bay X40 RAID Cable Kit**

For cable 4: **ThinkSystem SR655 2.5" & 3.5" SAS/SATA 4-Bay Rear Backplane X40 RAID Cable Kit**

Cable	From	To
1 SAS signal cable	SAS 0 connector on the backplane 1	The 8i RAID/HBA adapter on the internal riser card • Gen 3：C0 • Gen 4：C0
	SAS 1 connector on the backplane 1	The 8i RAID/HBA adapter on the internal riser card • Gen 3：C1 • Gen 4：C0

Cable	From	To
2 SAS signal cable	SAS 0 connector on the backplane 2	The 8i RAID/HBA adapter on riser card 1 • Gen 3：C0 • Gen 4：C0
	SAS 1 connector on the backplane 2	The 8i RAID/HBA adapter on riser card 1 • Gen 3：C1 • Gen 4：C0
3 SAS signal cable	SAS 0 connector on the backplane 3	The 8i RAID/HBA adapter in slot 4 on riser card 2 • Gen 3：C0 • Gen 4：C0
	SAS 1 connector on the backplane 3	The 8i RAID/HBA adapter in slot 4 on riser card 2 • Gen 3：C1 • Gen 4：C0
4 SAS signal cable	SAS connector on the rear backplane	The 8i RAID/HBA adapter in slot 5 on riser card 2 • Gen 3：C0 • Gen 4：C0

Configuration 6: three 8 x 2.5" SAS/SATA front backplanes, one middle drive cage (SAS/SATA), two RAID/HBA adapters (8i+24i)

This configuration supports one middle 2.5-inch drive cage with two 4 x 2.5-inch SAS/SATA drive backplanes.

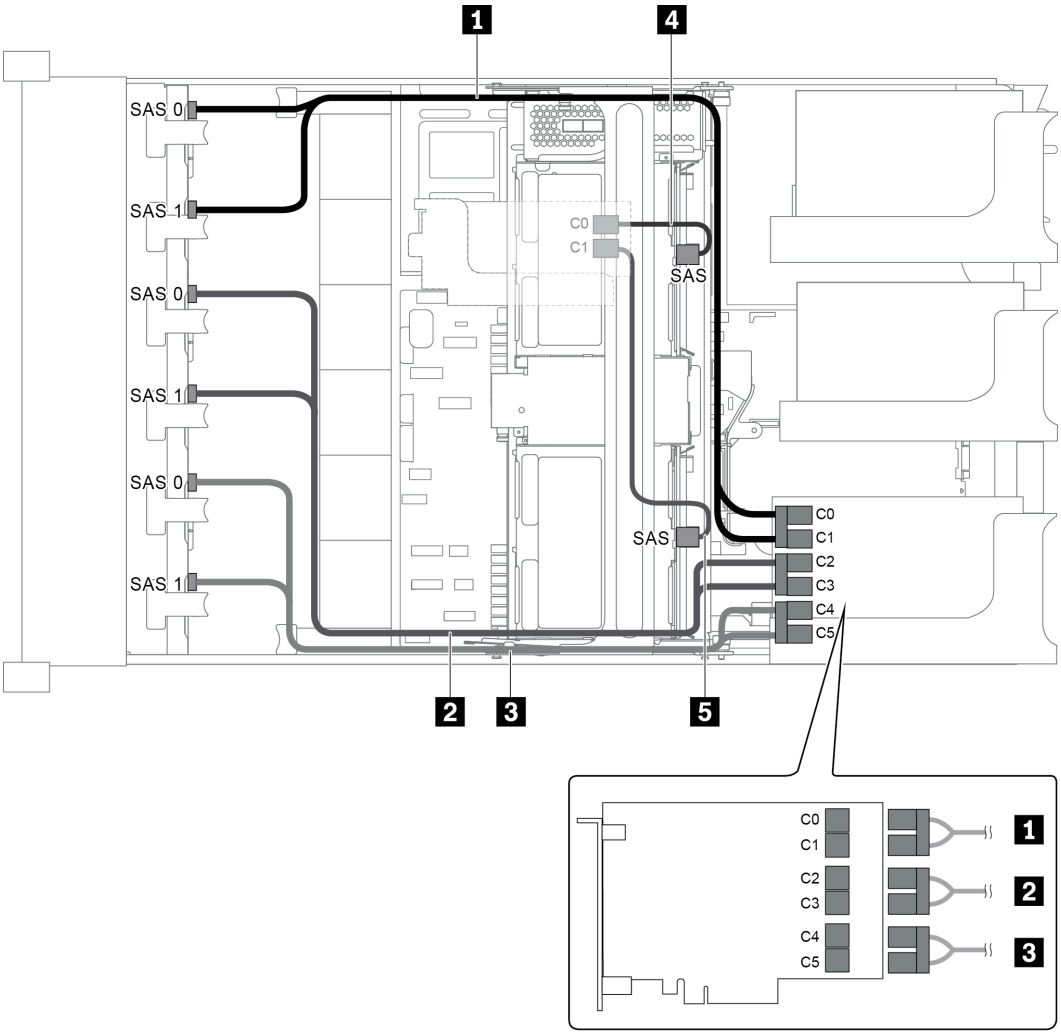

Figure 80. Cable routing for configuration with three 8 x 2.5" SAS/SATA front backplanes, one middle drive cage, and two RAID/HBA adapters (8i+24i)

Note: When a Gen 4 RAID/HBA adapter is installed, ensure that you use the corresponding Gen 4 cable:

For cable 4 and 5: **ThinkSystem SR655 2.5" & 3.5" SAS/SATA 4-Bay Rear Backplane X40 RAID Cable Kit**

Cable	From	To
1 SAS signal cable	SAS 0 connector on the backplane 1	Connector C0 on the 24i RAID adapter
	SAS 1 connector on the backplane 1	Connector C1 on the 24i RAID adapter
2 SAS signal cable	SAS 0 connector on the backplane 2	Connector C2 on the 24i RAID adapter
	SAS 1 connector on the backplane 2	Connector C3 on the 24i RAID adapter
3 SAS signal cable	SAS 0 connector on the backplane 3	Connector C4 on the 24i RAID adapter
	SAS 1 connector on the backplane 3	Connector C5 on the 24i RAID adapter

Cable	From	To
4 SAS signal cable	SAS connector on the middle backplane 1	The 8i RAID/HBA adapter • Gen 3：C0 • Gen 4：C0
5 SAS signal cable	SAS connector on the middle backplane 2	The 8i RAID/HBA adapter • Gen 3：C1 • Gen 4：C0

Configuration 7: three 8 x 2.5" SAS/SATA front backplanes, one middle drive cage (SAS/SATA), four 8i RAID/HBA adapters

This configuration supports one middle 2.5-inch drive cage with two 4 x 2.5-inch SAS/SATA drive backplanes.

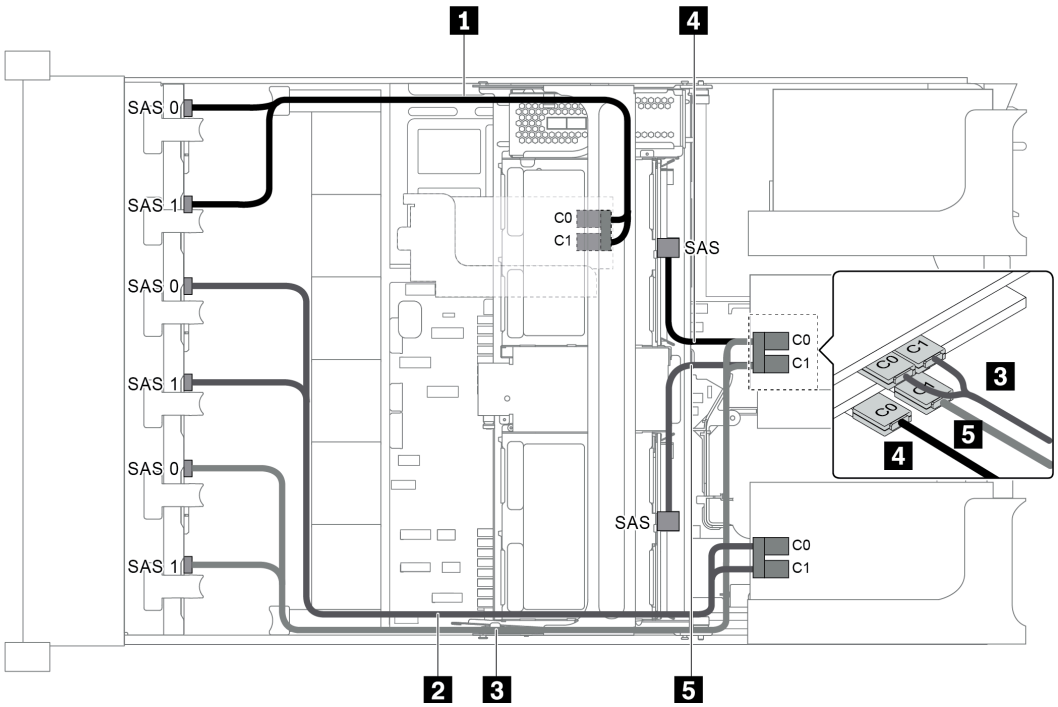

Figure 81. Cable routing for configuration with three 8 x 2.5" SAS/SATA front backplanes, one middle drive cage, and four 8i RAID/HBA adapters

Note: When a Gen 4 RAID/HBA adapter is installed, ensure that you use the corresponding Gen 4 cable:

For cable 1, 2, and 3: **ThinkSystem SR655 2.5" SAS/SATA 8-Bay X40 RAID Cable Kit**

For cable 4 and 5: **ThinkSystem SR655 2.5" & 3.5" SAS/SATA 4/8-Bay Middle Backplane X40 RAID Cable Kit**

Cable	From	To
1 SAS signal cable	SAS 0 connector on the backplane 1	The 8i RAID/HBA adapter on the internal riser card • Gen 3：C0 • Gen 4：C0

Cable	From	To
	SAS 1 connector on the backplane 1	The 8i RAID/HBA adapter on the internal riser card • Gen 3：C1 • Gen 4：C0
2 SAS signal cable	SAS 0 connector on the backplane 2	The 8i RAID/HBA adapter on riser card 1 • Gen 3：C0 • Gen 4：C0
	SAS 1 connector on the backplane 2	The 8i RAID/HBA adapter on riser card 1 • Gen 3：C1 • Gen 4：C0
3 SAS signal cable	SAS 0 connector on the backplane 3	The 8i RAID/HBA adapter in slot 4 on riser card 2 • Gen 3：C0 • Gen 4：C0
	SAS 1 connector on the backplane 3	The 8i RAID/HBA adapter in slot 4 on riser card 2 • Gen 3：C1 • Gen 4：C0
4 SAS signal cable	SAS connector on the middle backplane 1	The 8i RAID/HBA adapter in slot 5 on riser card 2 • Gen 3：C0 • Gen 4：C0
5 SAS signal cable	SAS connector on the middle backplane 2	The 8i RAID/HBA adapter in slot 5 on riser card 2 • Gen 3：C1 • Gen 4：C0

Configuration 8: three 8 x 2.5" SAS/SATA front backplanes, one 32i RAID adapter

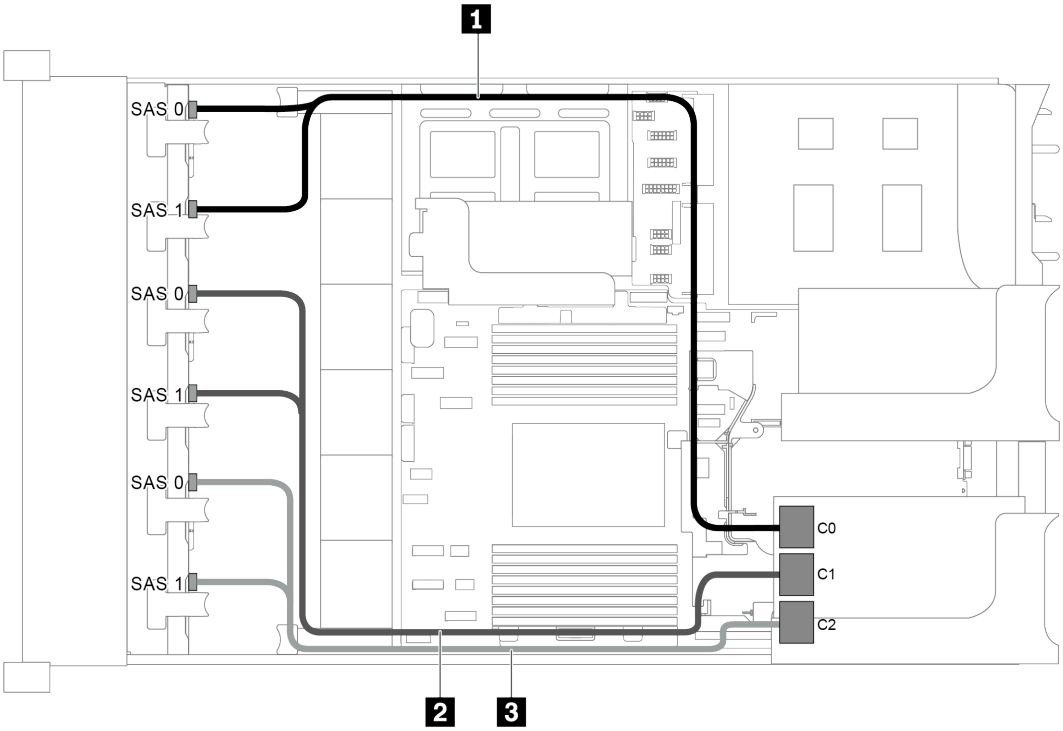

Figure 82. Cable routing for configuration with three 8 x 2.5" SAS/SATA front backplanes and one 32i RAID adapter

Note: The 32i RAID adapter belongs to Gen 4. Ensure that you use the corresponding Gen 4 cable:

ThinkSystem SR655 2.5" SAS/SATA 8-Bay X40 RAID Cable Kit

Cable	From	To
1 SAS signal cable	SAS 0 and SAS 1 connectors on the backplane 1	Connector C0 on the 32i RAID adapter
2 SAS signal cable	SAS 0 and SAS 1 connectors on the backplane 2	Connector C1 on the 32i RAID adapter
3 SAS signal cable	SAS 0 and SAS 1 connectors on the backplane 3	Connector C2 on the 32i RAID adapter

Configuration 9: three 8 x 2.5" SAS/SATA front backplanes, one rear drive cage (SAS/SATA), two RAID/HBA adapters (8i+32i)

This configuration supports one rear 2.5-inch drive cage with a 4 x 2.5-inch SAS/SATA drive backplane.

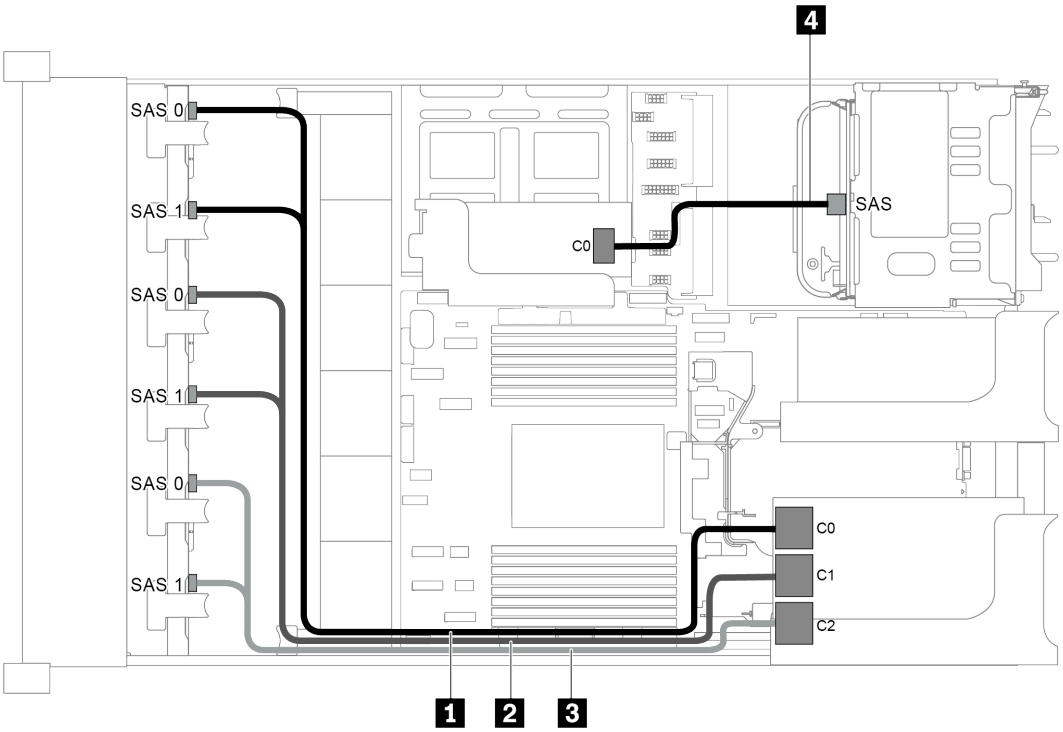

Figure 83. Cable routing for configuration with three 8 x 2.5" SAS/SATA front backplanes, one rear drive cage, and two RAID/HBA adapters (8i+32i)

Note: The 32i RAID adapter belongs to Gen 4. Ensure that you use the corresponding Gen 4 cable:

For cable 1, 2, and 3: **ThinkSystem SR655 2.5" SAS/SATA 8-Bay X40 RAID Cable Kit**

For cable 4: **ThinkSystem SR655 2.5" & 3.5" SAS/SATA 4-Bay Rear Backplane X40 RAID Cable Kit**

Cable	From	To
1 SAS signal cable	SAS 0 and SAS 1 connectors on the backplane 1	Connector C0 on the 32i RAID adapter
2 SAS signal cable	SAS 0 and SAS 1 connectors on the backplane 2	Connector C1 on the 32i RAID adapter
3 SAS signal cable	SAS 0 and SAS 1 connectors on the backplane 3	Connector C2 on the 32i RAID adapter
4 SAS signal cable	SAS connector on the rear backplane	Connector C0 on the 8i RAID/HBA adapter

Configuration 10: three 8 x 2.5" SAS/SATA front backplanes, one middle drive cage (SAS/SATA), two RAID/HBA adapters (8i+32i)

This configuration supports one middle 2.5-inch drive cage with two 4 x 2.5-inch SAS/SATA drive backplanes.

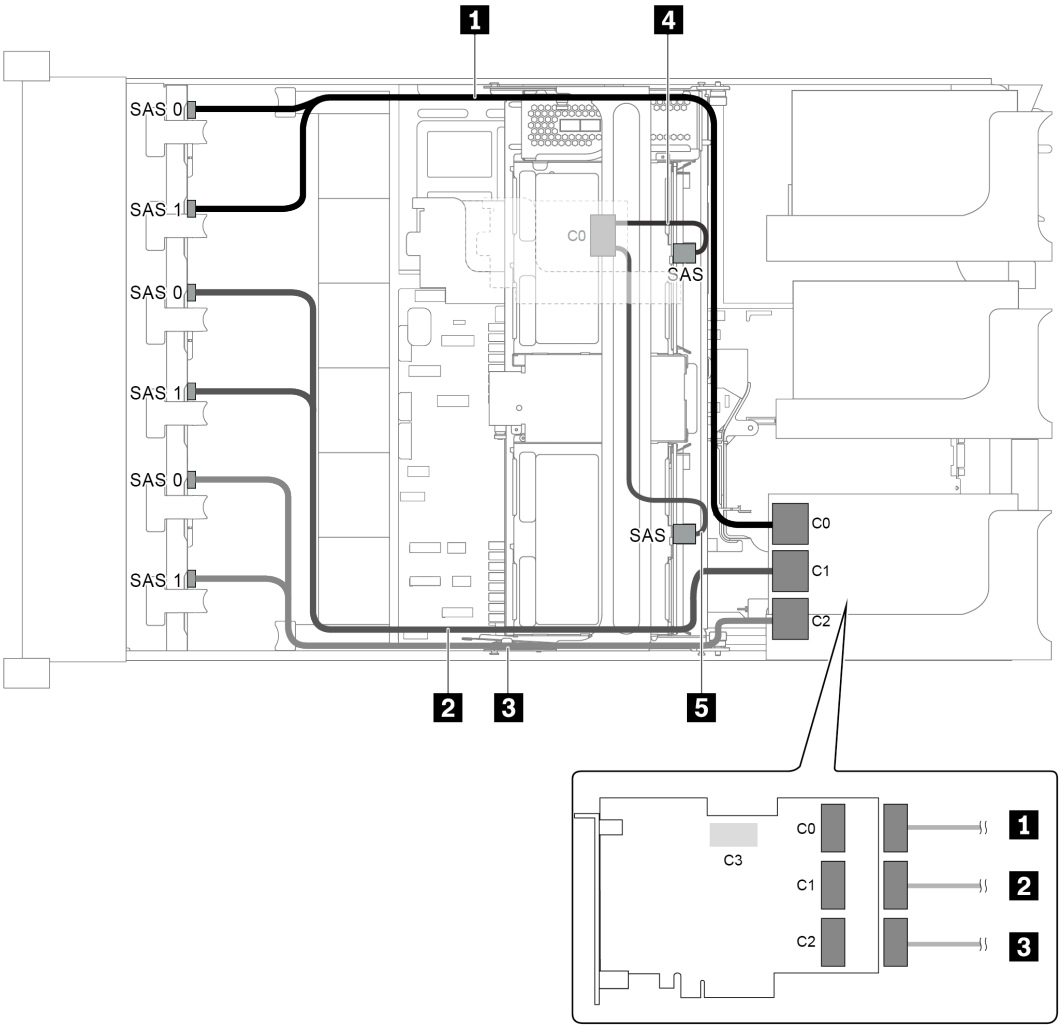

Figure 84. Cable routing for configuration with three 8 x 2.5" SAS/SATA front backplanes, one middle drive cage, and two RAID/HBA adapters (8i+32i)

Note: The 32i RAID adapter belongs to Gen 4. Ensure that you use the corresponding Gen 4 cable:

For cable 1, 2, and 3: **ThinkSystem SR655 2.5" SAS/SATA 8-Bay X40 RAID Cable Kit**

For cable 4: **ThinkSystem SR655 2.5" & 3.5" SAS/SATA 4/8-Bay Middle Backplane X40 RAID Cable Kit**

Cable	From	To
1 SAS signal cable	SAS 0 and SAS 1 connectors on the backplane 1	Connector C0 on the 32i RAID adapter
2 SAS signal cable	SAS 0 and SAS 1 connectors on the backplane 2	Connector C1 on the 32i RAID adapter
3 SAS signal cable	SAS 0 and SAS 1 connectors on the backplane 3	Connector C2 on the 32i RAID adapter
4 SAS signal cable	SAS connector on the middle backplane 1	Connector C0 on the 8i RAID/HBA adapter
	SAS connector on the middle backplane 2	

Server model with 24 x 2.5-inch front drive bays (16 SAS/SATA + 8 NVMe)

This section provides cable routing information for the server model with two 8 x 2.5-inch SAS/SATA front backplanes and one 8 x 2.5-inch NVMe front backplane. The NVMe backplane provides eight NVMe drive bays (bays 0–7).

Configuration 1: three front backplanes (8 NVMe + 2 x 8 SAS/SATA), onboard connections

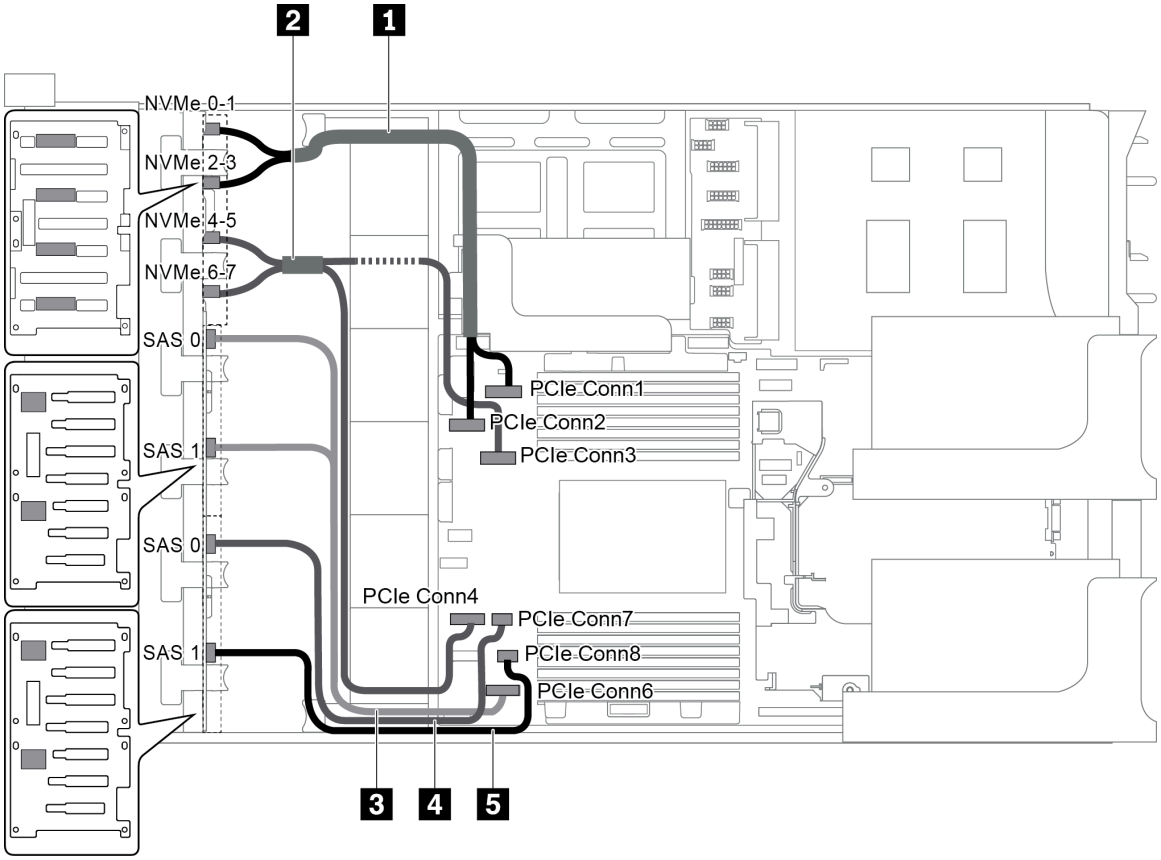

Figure 85. Cable routing for configuration with three front backplanes (8 NVMe + 2 x 8 SAS/SATA)

Cable	From	To
1 NVMe signal cable	NVMe 0-1 connector on the NVMe backplane	PCIe connector 1 on the system board
	NVMe 2-3 connector on the NVMe backplane	PCIe connector 2 on the system board
2 NVMe signal cable	NVMe 4-5 connector on the NVMe backplane	PCIe connector 3 on the system board
	NVMe 6-7 connector on the NVMe backplane	PCIe connector 4 on the system board
3 SAS signal cable	SAS 0 and SAS 1 connectors on the SAS/SATA backplane 1	PCIe connector 6 on the system board
4 SAS signal cable	SAS 0 connector on the SAS/SATA backplane 2	PCIe connector 7 on the system board
5 SAS signal cable	SAS 1 connector on the SAS/SATA backplane 2	PCIe connector 8 on the system board

Note: When the SAS/SATA backplanes are connected to PCIe connectors on the system board, only SATA drives are supported, SAS drives not supported.

Configuration 2: three front backplanes (8 NVMe + 2 x 8 SAS/SATA), one 16i RAID/HBA adapter

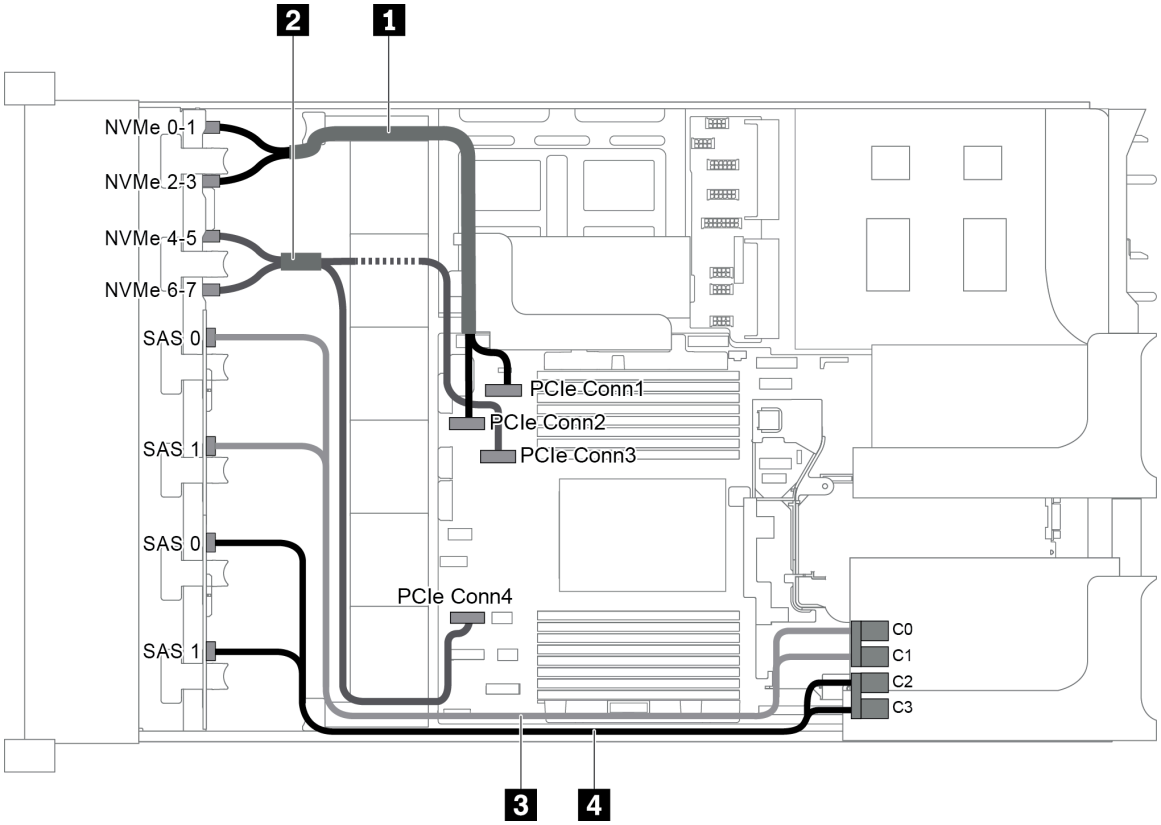

Figure 86. Cable routing for configuration with three front backplanes (8 NVMe + 2 x 8 SAS/SATA) and one 16i RAID/HBA adapter

Note: When a Gen 4 RAID/HBA adapter is installed, ensure that you use the corresponding Gen 4 cable:

ThinkSystem SR655 2.5" SAS/SATA 8-Bay X40 RAID Cable Kit

Cable	From	To
1 NVMe signal cable	NVMe 0-1 connector on the NVMe backplane	PCIe connector 1 on the system board
	NVMe 2-3 connector on the NVMe backplane	PCIe connector 2 on the system board
3 NVMe signal cable	NVMe 4-5 connector on the NVMe backplane	PCIe connector 3 on the system board
	NVMe 6-7 connector on the NVMe backplane	PCIe connector 4 on the system board
4 SAS signal cable	SAS 0 connector on the SAS/SATA backplane 1	The RAID/HBA adapter • Gen 3：C0 • Gen 4：C0
	SAS 1 connector on the SAS/SATA backplane 1	The RAID/HBA adapter • Gen 3：C1 • Gen 4：C0
5 SAS signal cable	SAS 0 connector on the SAS/SATA backplane 2	The RAID/HBA adapter • Gen 3：C2 • Gen 4：C1

Cable	From	To
	SAS 1 connector on the SAS/SATA backplane 2	The RAID/HBA adapter • Gen 3：C3 • Gen 4：C1

Configuration 3: three front backplanes (8 NVMe + 2 x 8 SAS/SATA), two 8i RAID/HBA adapters

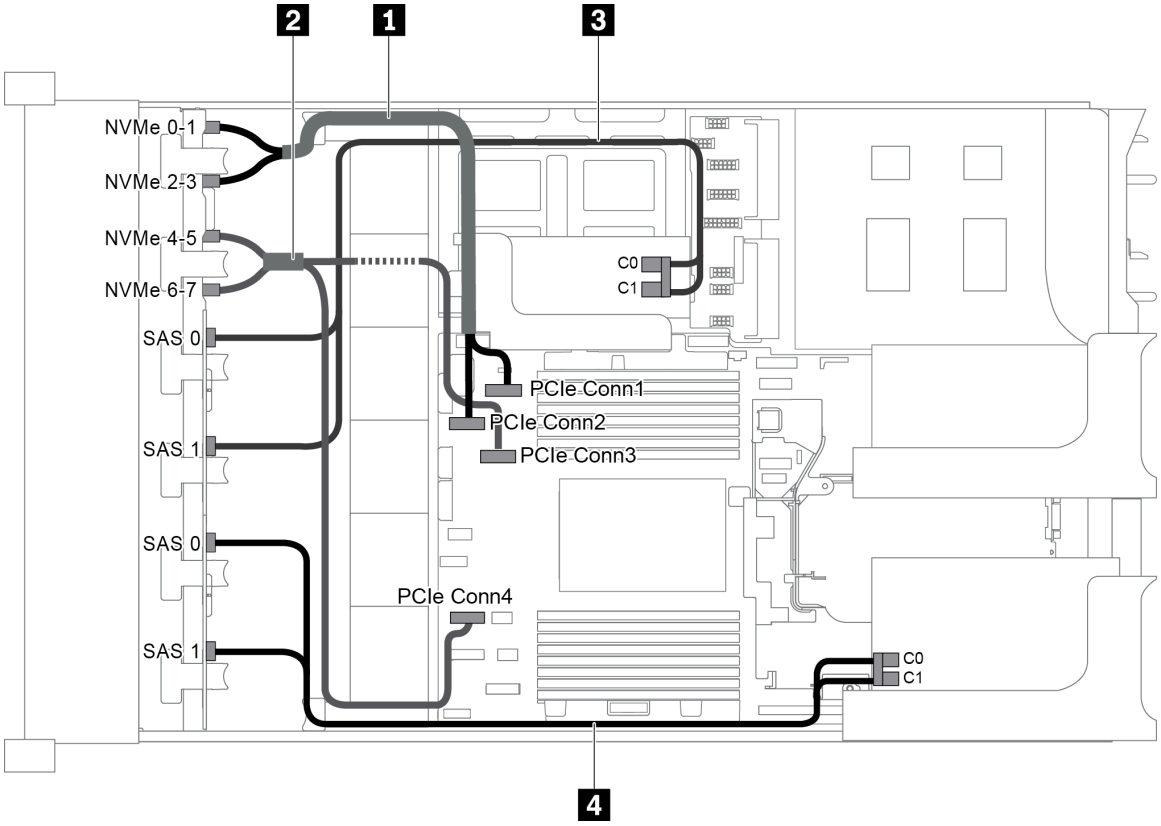

Figure 87. Cable routing for configuration with three front backplanes (8 NVMe + 2 x 8 SAS/SATA) and two 8i RAID/HBA adapters

Note: When a Gen 4 RAID/HBA adapter is installed, ensure that you use the corresponding Gen 4 cable:

ThinkSystem SR655 2.5" SAS/SATA 8-Bay X40 RAID Cable Kit

Cable	From	To
1 NVMe signal cable	NVMe 0-1 connector on the NVMe backplane	PCIe connector 1 on the system board
	NVMe 2-3 connector on the NVMe backplane	PCIe connector 2 on the system board
2 NVMe signal cable	NVMe 4-5 connector on the NVMe backplane	PCIe connector 3 on the system board
	NVMe 6-7 connector on the NVMe backplane	PCIe connector 4 on the system board
3 SAS signal cable	SAS 0 connector on the SAS/SATA backplane 1	The RAID/HBA adapter on the internal riser card • Gen 3：C0 • Gen 4：C0

Cable	From	To
	SAS 1 connector on the SAS/SATA backplane 1	The RAID/HBA adapter on the internal riser card • Gen 3：C1 • Gen 4：C0
4 SAS signal cable	SAS 0 connector on the SAS/SATA backplane 2	The RAID/HBA adapter on riser card 1 • Gen 3：C0 • Gen 4：C0
	SAS 1 connector on the SAS/SATA backplane 2	The RAID/HBA adapter on riser card 1 • Gen 3：C1 • Gen 4：C0

Configuration 4: three front backplanes (8 NVMe + 2 x 8 SAS/SATA), one rear drive cage (SAS/SATA), one 24i RAID adapter

This configuration supports one rear 2.5-inch drive cage with a 4 x 2.5-inch SAS/SATA drive backplane.

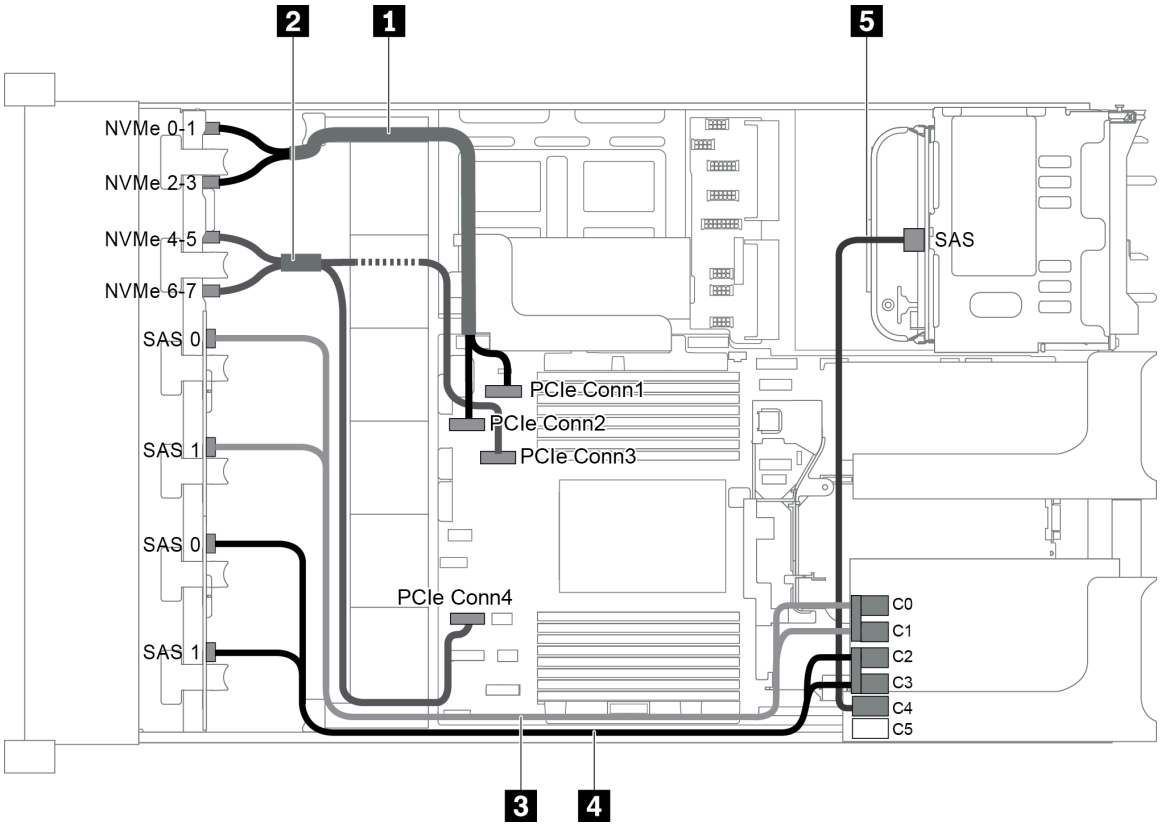

Figure 88. Cable routing for configuration with three front backplanes (8 NVMe + 2 x 8 SAS/SATA), one rear drive cage, and one 24i RAID adapter

Cable	From	To
1 NVMe signal cable	NVMe 0-1 connector on the NVMe backplane	PCIe connector 1 on the system board
	NVMe 2-3 connector on the NVMe backplane	PCIe connector 2 on the system board

Cable	From	To
2 NVMe signal cable	NVMe 4-5 connector on the NVMe backplane	PCIe connector 3 on the system board
	NVMe 6-7 connector on the NVMe backplane	PCIe connector 4 on the system board
3 SAS signal cable	SAS 0 connector on the SAS/SATA backplane 1	Connector C0 on the RAID adapter
	SAS 1 connector on the SAS/SATA backplane 1	Connector C1 on the RAID adapter
4 SAS signal cable	SAS 0 connector on the SAS/SATA backplane 2	Connector C2 on the RAID adapter
	SAS 1 connector on the SAS/SATA backplane 2	Connector C3 on the RAID adapter
5 SAS signal cable	SAS connector on the rear backplane	Connector C4 on the RAID adapter

Configuration 5: three front backplanes (8 NVMe + 2 x 8 SAS/SATA), one rear drive cage (SAS/SATA), two RAID/HBA adapters (8i+16i)

This configuration supports one rear 2.5-inch drive cage with a 4 x 2.5-inch SAS/SATA drive backplane.

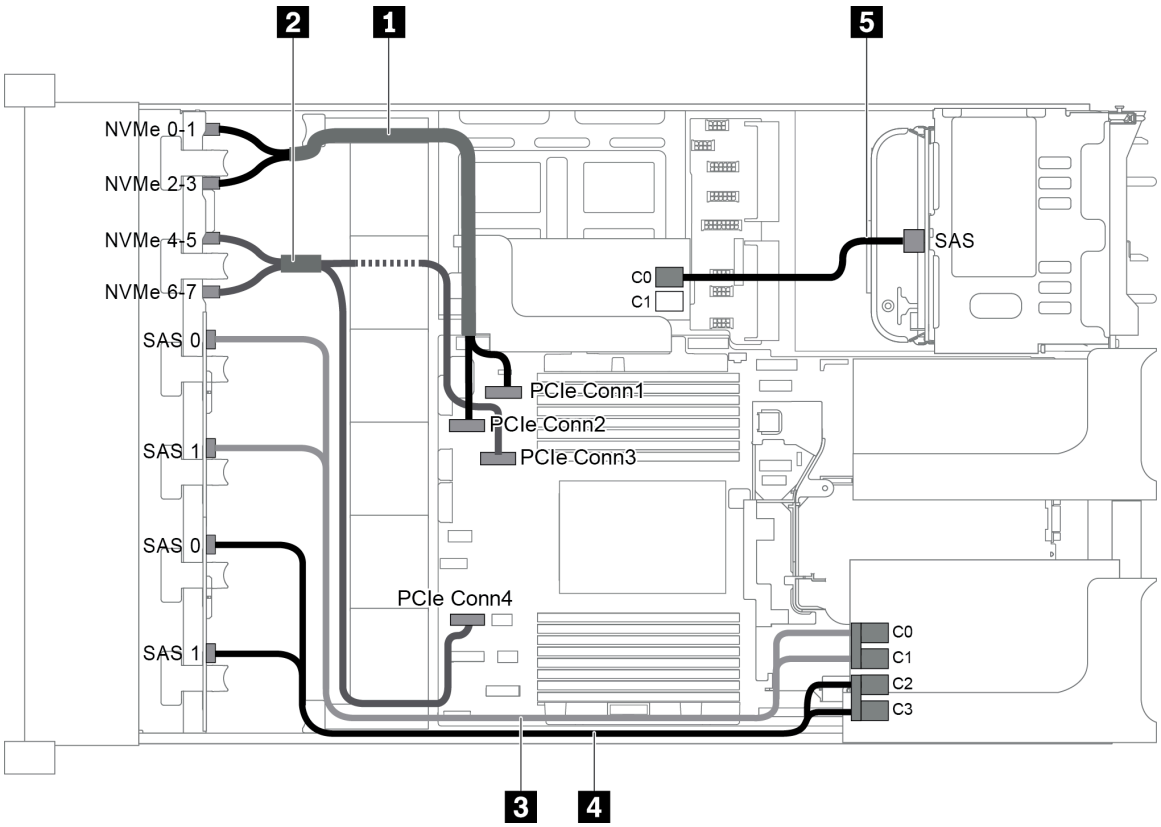

Figure 89. Cable routing for configuration with three front backplanes (8 NVMe + 2 x 8 SAS/SATA), one rear drive cage, and two RAID/HBA adapters (8i+16i)

Note: When a Gen 4 RAID/HBA adapter is installed, ensure that you use the corresponding Gen 4 cable:

For cable 3 and 4: **ThinkSystem SR655 2.5" SAS/SATA 8-Bay X40 RAID Cable Kit**

For cable 5: **ThinkSystem SR655 2.5" & 3.5" SAS/SATA 4-Bay Rear Backplane X40 RAID Cable Kit**

Cable	From	To
1 NVMe signal cable	NVMe 0-1 connector on the NVMe backplane	PCIe connector 1 on the system board
	NVMe 2-3 connector on the NVMe backplane	PCIe connector 2 on the system board
2 NVMe signal cable	NVMe 4-5 connector on the NVMe backplane	PCIe connector 3 on the system board
	NVMe 6-7 connector on the NVMe backplane	PCIe connector 4 on the system board
3 SAS signal cable	SAS 0 connector on the SAS/SATA backplane 1	The 16i RAID/HBA adapter • Gen 3：C0 • Gen 4：C0
	SAS 1 connector on the SAS/SATA backplane 1	The 16i RAID/HBA adapter • Gen 3：C1 • Gen 4：C0
4 SAS signal cable	SAS 0 connector on the SAS/SATA backplane 2	The 16i RAID/HBA adapter • Gen 3：C2 • Gen 4：C1
	SAS 1 connector on the SAS/SATA backplane 2	The 16i RAID/HBA adapter • Gen 3：C3 • Gen 4：C1
5 SAS signal cable	SAS connector on the rear backplane	The 8i RAID/HBA adapter • Gen 3：C0 • Gen 4：C0

Configuration 6: three front backplanes (8 NVMe + 2 x 8 SAS/SATA), one rear drive cage (SAS/SATA), three 8i RAID/HBA adapters

This configuration supports one rear 2.5-inch drive cage with a 4 x 2.5-inch SAS/SATA drive backplane.

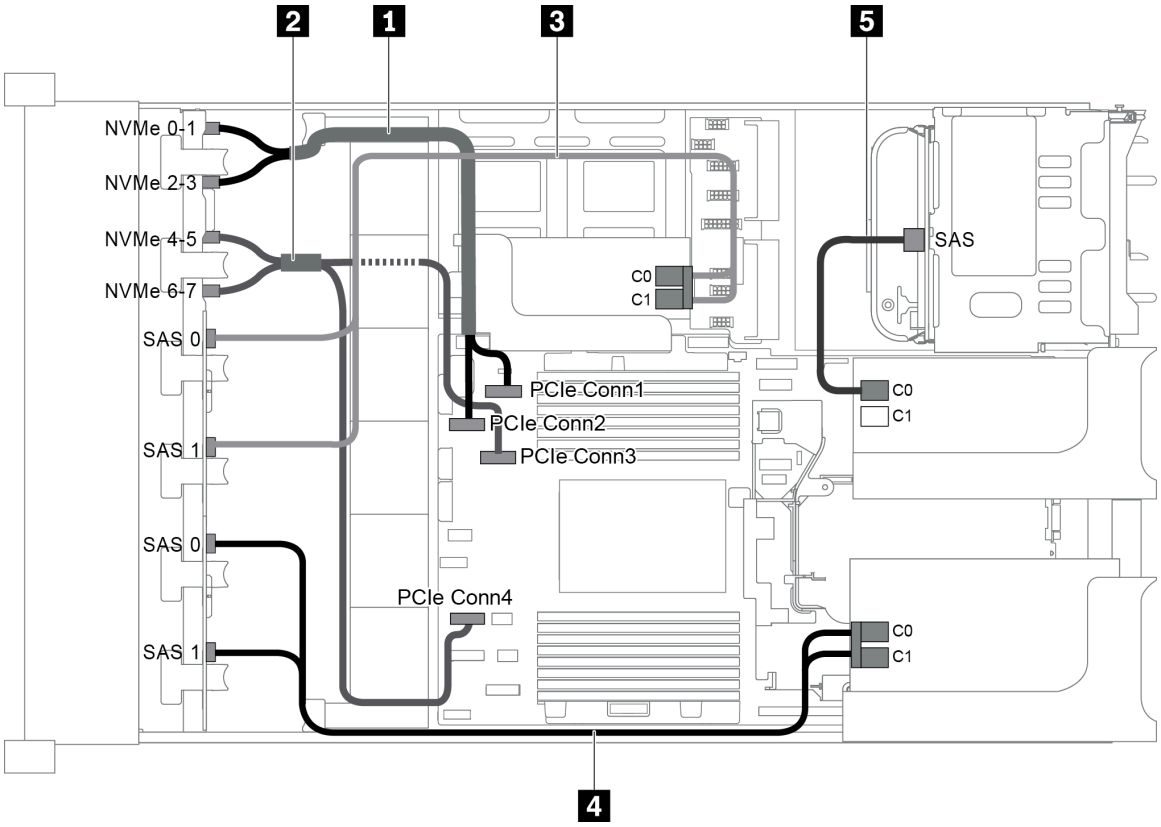

Figure 90. Cable routing for configuration with three front backplanes (8 NVMe + 2 x 8 SAS/SATA), one rear drive cage, and three 8i RAID/HBA adapters

Note: When a Gen 4 RAID/HBA adapter is installed, ensure that you use the corresponding Gen 4 cable:

For cable 3 and 4: **ThinkSystem SR655 2.5" SAS/SATA 8-Bay X40 RAID Cable Kit**

For cable 5: **ThinkSystem SR655 2.5" & 3.5" SAS/SATA 4-Bay Rear Backplane X40 RAID Cable Kit**

Cable	From	To
1 NVMe signal cable	NVMe 0-1 connector on the NVMe backplane	PCIe connector 1 on the system board
	NVMe 2-3 connector on the NVMe backplane	PCIe connector 2 on the system board
2 NVMe signal cable	NVMe 4-5 connector on the NVMe backplane	PCIe connector 3 on the system board
	NVMe 6-7 connector on the NVMe backplane	PCIe connector 4 on the system board
3 SAS signal cable	SAS 0 connector on the SAS/SATA backplane 1	The 8i RAID/HBA adapter on the internal riser card • Gen 3：C0 • Gen 4：C0
	SAS 1 connector on the SAS/SATA backplane 1	The 8i RAID/HBA adapter on the internal riser card • Gen 3：C1 • Gen 4：C0

Cable	From	To
4 SAS signal cable	SAS 0 connector on the SAS/SATA backplane 2	The 8i RAID/HBA adapter on riser card 1 • Gen 3：C0 • Gen 4：C0
	SAS 1 connector on the SAS/SATA backplane 2	The 8i RAID/HBA adapter on riser card 1 • Gen 3：C1 • Gen 4：C0
5 SAS signal cable	SAS connector on the rear backplane	The 8i RAID/HBA adapter on riser card 2 • Gen 3：C0 • Gen 4：C0

Configuration 7: three front backplanes (8 NVMe + 2 x 8 SAS/SATA), one middle drive cage (SAS/SATA), one 24i RAID adapter

This configuration supports one middle 2.5-inch drive cage with two 4 x 2.5-inch SAS/SATA drive backplanes.

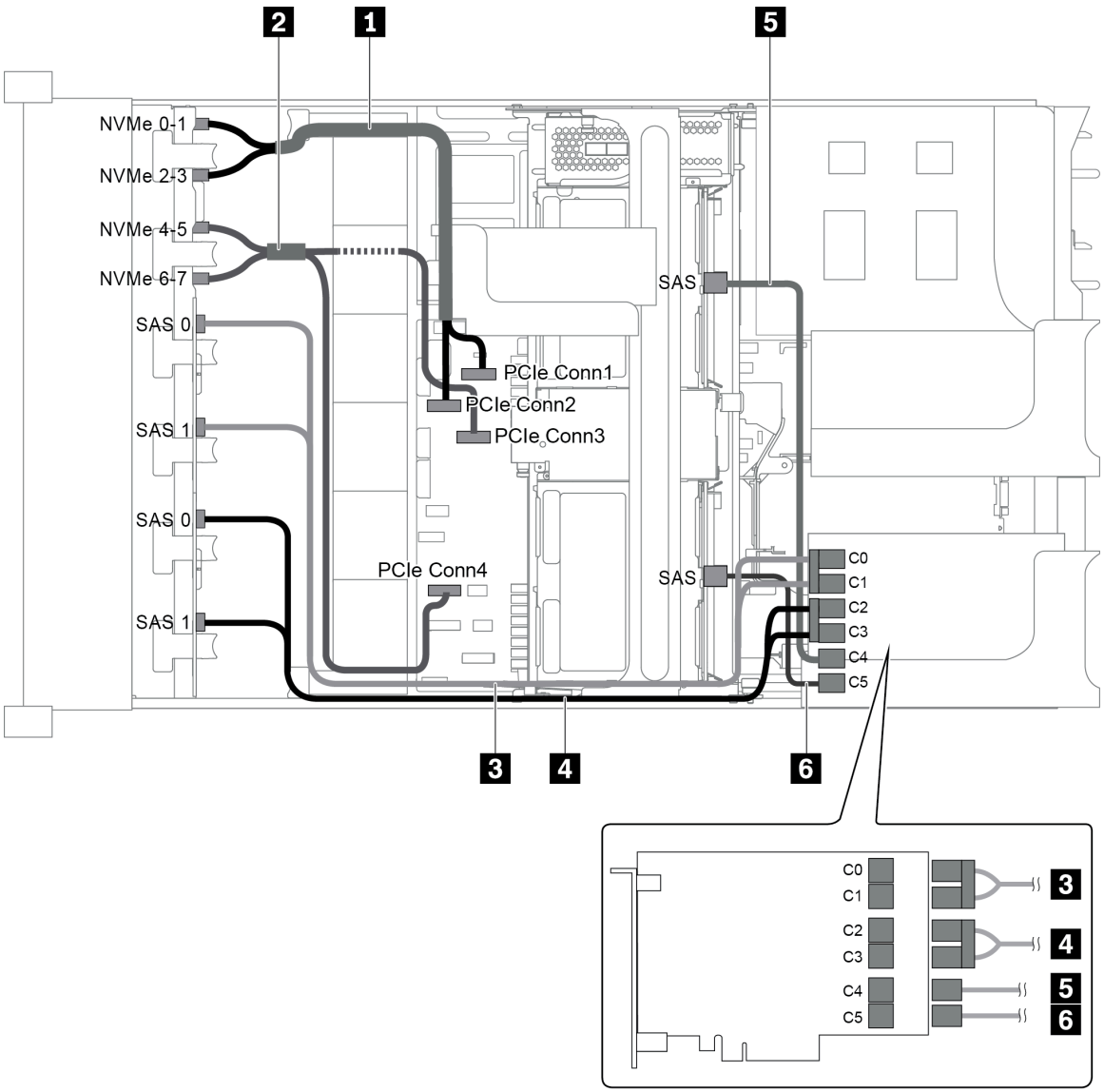

Figure 91. Cable routing for configuration with three front backplanes (8 NVMe + 2 x 8 SAS/SATA), one middle drive cage, and one 24i RAID adapter

Cable	From	To
1 NVMe signal cable	NVMe 0-1 connector on the NVMe backplane	PCIe connector 1 on the system board
	NVMe 2-3 connector on the NVMe backplane	PCIe connector 2 on the system board
2 NVMe signal cable	NVMe 4-5 connector on the NVMe backplane	PCIe connector 3 on the system board
	NVMe 6-7 connector on the NVMe backplane	PCIe connector 4 on the system board
3 SAS signal cable	SAS 0 connector on the SAS/SATA backplane 1	Connector C0 on the RAID adapter
	SAS 1 connector on the SAS/SATA backplane 1	Connector C1 on the RAID adapter
4 SAS signal cable	SAS 0 connector on the SAS/SATA backplane 2	Connector C2 on the RAID adapter

Cable	From	To
	SAS 1 connector on the SAS/SATA backplane 2	Connector C3 on the RAID adapter
5 SAS signal cable	SAS connector on the middle backplane 1	Connector C4 on the RAID adapter
6 SAS signal cable	SAS connector on the middle backplane 2	Connector C5 on the RAID adapter

Configuration 8: three front backplanes (8 NVMe + 2 x 8 SAS/SATA), one middle drive cage (SAS/SATA), two RAID/HBA adapters (8i+16i)

This configuration supports one middle 2.5-inch drive cage with two 4 x 2.5-inch SAS/SATA drive backplanes.

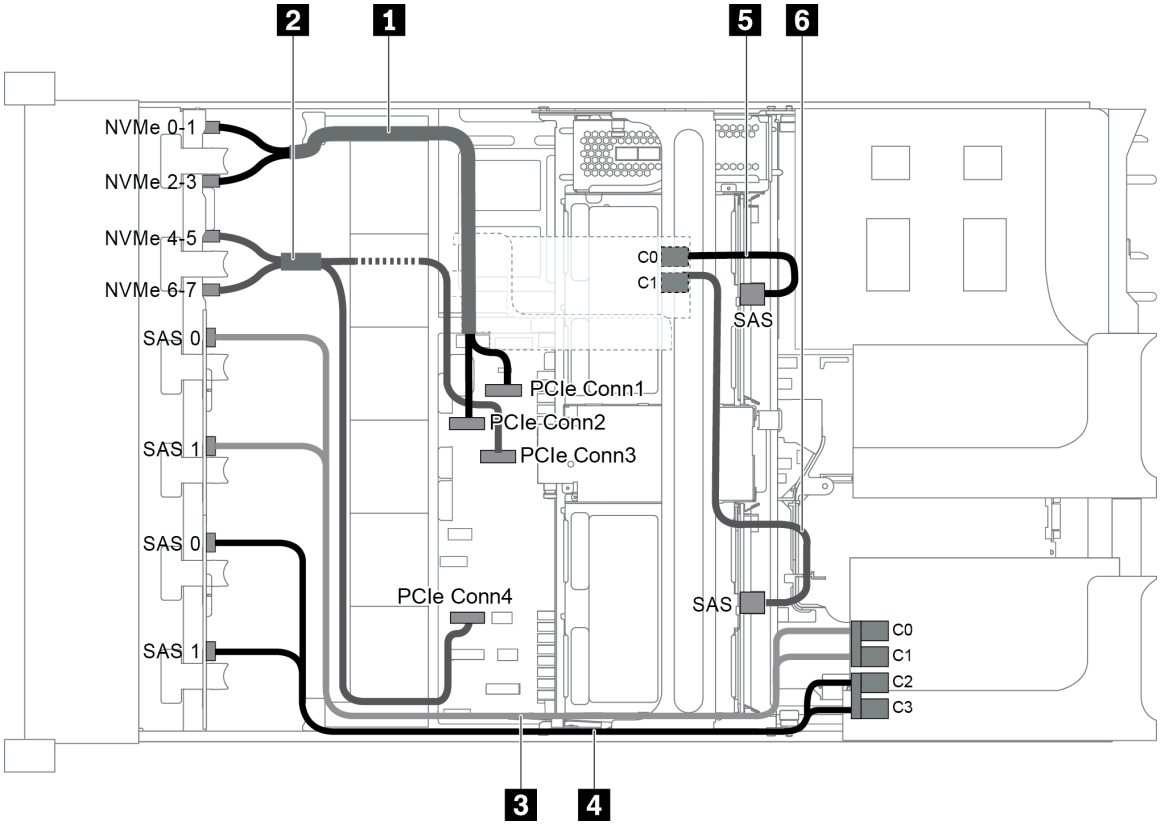

Figure 92. Cable routing for configuration with three front backplanes (8 NVMe + 2 x 8 SAS/SATA), one middle drive cage, and two RAID/HBA adapters (8i+16i)

Note: When a Gen 4 RAID/HBA adapter is installed, ensure that you use the corresponding Gen 4 cable:

For cable 3 and 4: **ThinkSystem SR655 2.5" SAS/SATA 8-Bay X40 RAID Cable Kit**

For cable 5 and 6: **ThinkSystem SR655 2.5" & 3.5" SAS/SATA 4/8-Bay Middle Backplane X40 RAID Cable Kit**

Cable	From	To
1 NVMe signal cable	NVMe 0-1 connector on the NVMe backplane	PCIe connector 1 on the system board
	NVMe 2-3 connector on the NVMe backplane	PCIe connector 2 on the system board

Cable	From	To
2 NVMe signal cable	NVMe 4-5 connector on the NVMe backplane	PCIe connector 3 on the system board
	NVMe 6-7 connector on the NVMe backplane	PCIe connector 4 on the system board
3 SAS signal cable	SAS 0 connector on the SAS/SATA backplane 1	The 16i RAID/HBA adapter • Gen 3：C0 • Gen 4：C0
	SAS 1 connector on the SAS/SATA backplane 1	The 16i RAID/HBA adapter • Gen 3：C1 • Gen 4：C0
4 SAS signal cable	SAS 0 connector on the SAS/SATA backplane 2	The 16i RAID/HBA adapter • Gen 3：C2 • Gen 4：C1
	SAS 1 connector on the SAS/SATA backplane 2	The 16i RAID/HBA adapter • Gen 3：C3 • Gen 4：C1
5 SAS signal cable	SAS connector on the middle backplane 1	The 8i RAID/HBA adapter • Gen 3：C0 • Gen 4：C0
6 SAS signal cable	SAS connector on the middle backplane 2	The 8i RAID/HBA adapter • Gen 3：C1 • Gen 4：C0

Configuration 9: three front backplanes (8 NVMe + 2 x 8 SAS/SATA), one middle drive cage (SAS/SATA), three 8i RAID/HBA adapters

This configuration supports one middle 2.5-inch drive cage with two 4 x 2.5-inch SAS/SATA drive backplanes.

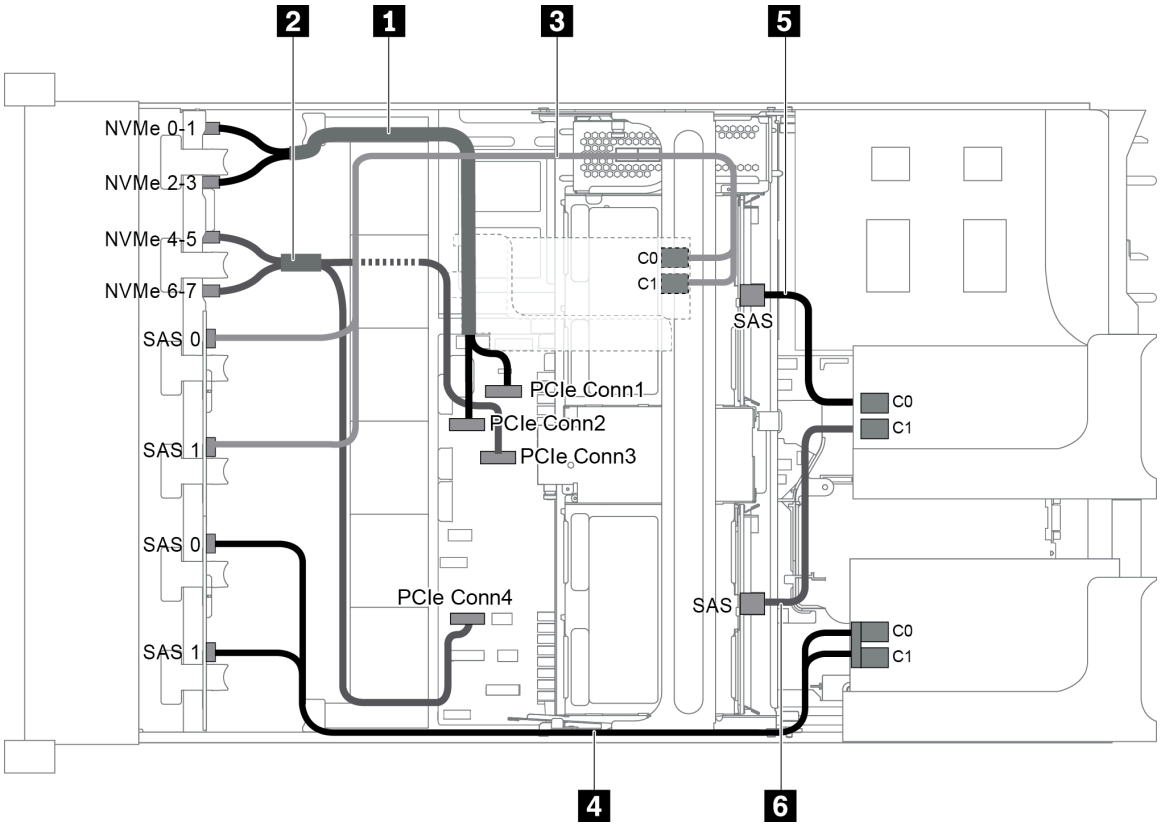

Figure 93. Cable routing for configuration with three front backplanes (8 NVMe + 2 x 8 SAS/SATA), one middle drive cage, and three 8i RAID/HBA adapters

Note: When a Gen 4 RAID/HBA adapter is installed, ensure that you use the corresponding Gen 4 cable:

For cable 3 and 4: **ThinkSystem SR655 2.5" SAS/SATA 8-Bay X40 RAID Cable Kit**

For cable 5 and 6: **ThinkSystem SR655 2.5" & 3.5" SAS/SATA 4/8-Bay Middle Backplane X40 RAID Cable Kit**

Cable	From	To
1 NVMe signal cable	NVMe 0-1 connector on the NVMe backplane	PCIe connector 1 on the system board
	NVMe 2-3 connector on the NVMe backplane	PCIe connector 2 on the system board
2 NVMe signal cable	NVMe 4-5 connector on the NVMe backplane	PCIe connector 3 on the system board
	NVMe 6-7 connector on the NVMe backplane	PCIe connector 4 on the system board
3 SAS signal cable	SAS 0 connector on the SAS/SATA backplane 1	The 8i RAID/HBA adapter on the internal riser card • Gen 3：C0 • Gen 4：C0
	SAS 1 connector on the SAS/SATA backplane 1	The 8i RAID/HBA adapter on the internal riser card • Gen 3：C1 • Gen 4：C0

Cable	From	To
4 SAS signal cable	SAS 0 connector on the SAS/SATA backplane 2	The 8i RAID/HBA adapter on riser card 1 • Gen 3：C0 • Gen 4：C0
	SAS 1 connector on the SAS/SATA backplane 2	The 8i RAID/HBA adapter on riser card 1 • Gen 3：C1 • Gen 4：C0
5 SAS signal cable	SAS connector on the middle backplane 1	The 8i RAID/HBA adapter on riser card 2 • Gen 3：C0 • Gen 4：C0
6 SAS signal cable	SAS connector on the middle backplane 2	The 8i RAID/HBA adapter on riser card 2 • Gen 3：C1 • Gen 4：C0

Configuration 10: three front backplanes (8 NVMe + 2 x 8 SAS/SATA), one rear drive cage (SAS/SATA), one 32i RAID adapter

This configuration supports one rear 2.5-inch drive cage with a 4 x 2.5-inch SAS/SATA drive backplane.

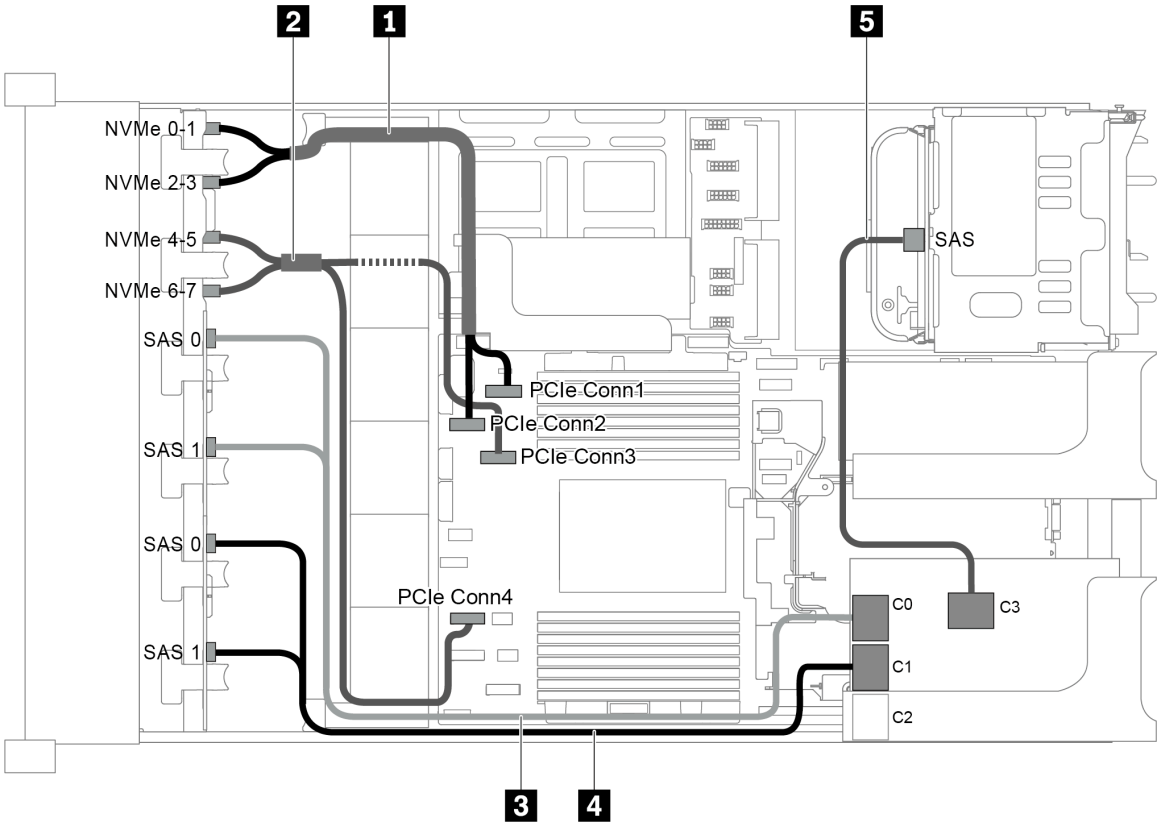

Figure 94. Cable routing for configuration with three front backplanes (8 NVMe + 2 x 8 SAS/SATA), one rear drive cage, and one 32i RAID adapter

Note: The 32i RAID adapter belongs to Gen 4. Ensure that you use the corresponding Gen 4 cable:

For cable 3 and 4: **ThinkSystem SR655 2.5" SAS/SATA 8-Bay X40 RAID Cable Kit**

For cable 5: **ThinkSystem SR655 2.5" & 3.5" SAS/SATA 4-Bay Rear Backplane X40 RAID Cable Kit**

Cable	From	To
1 NVMe signal cable	NVMe 0-1 connector on the NVMe backplane	PCIe connector 1 on the system board
	NVMe 2-3 connector on the NVMe backplane	PCIe connector 2 on the system board
2 NVMe signal cable	NVMe 4-5 connector on the NVMe backplane	PCIe connector 3 on the system board
	NVMe 6-7 connector on the NVMe backplane	PCIe connector 4 on the system board
3 SAS signal cable	SAS 0 and SAS 1 connectors on the SAS/SATA backplane 1	Connector C0 on the RAID adapter
4 SAS signal cable	SAS 0 and SAS 1 connectors on the SAS/SATA backplane 2	Connector C1 on the RAID adapter
5 SAS signal cable	SAS connector on the rear backplane	Connector C3 on the RAID adapter

Configuration 11: three front backplanes (8 NVMe + 2 x 8 SAS/SATA), one middle drive cage (SAS/SATA), one 32i RAID adapter

This configuration supports one middle 2.5-inch drive cage with two 4 x 2.5-inch SAS/SATA drive backplanes.

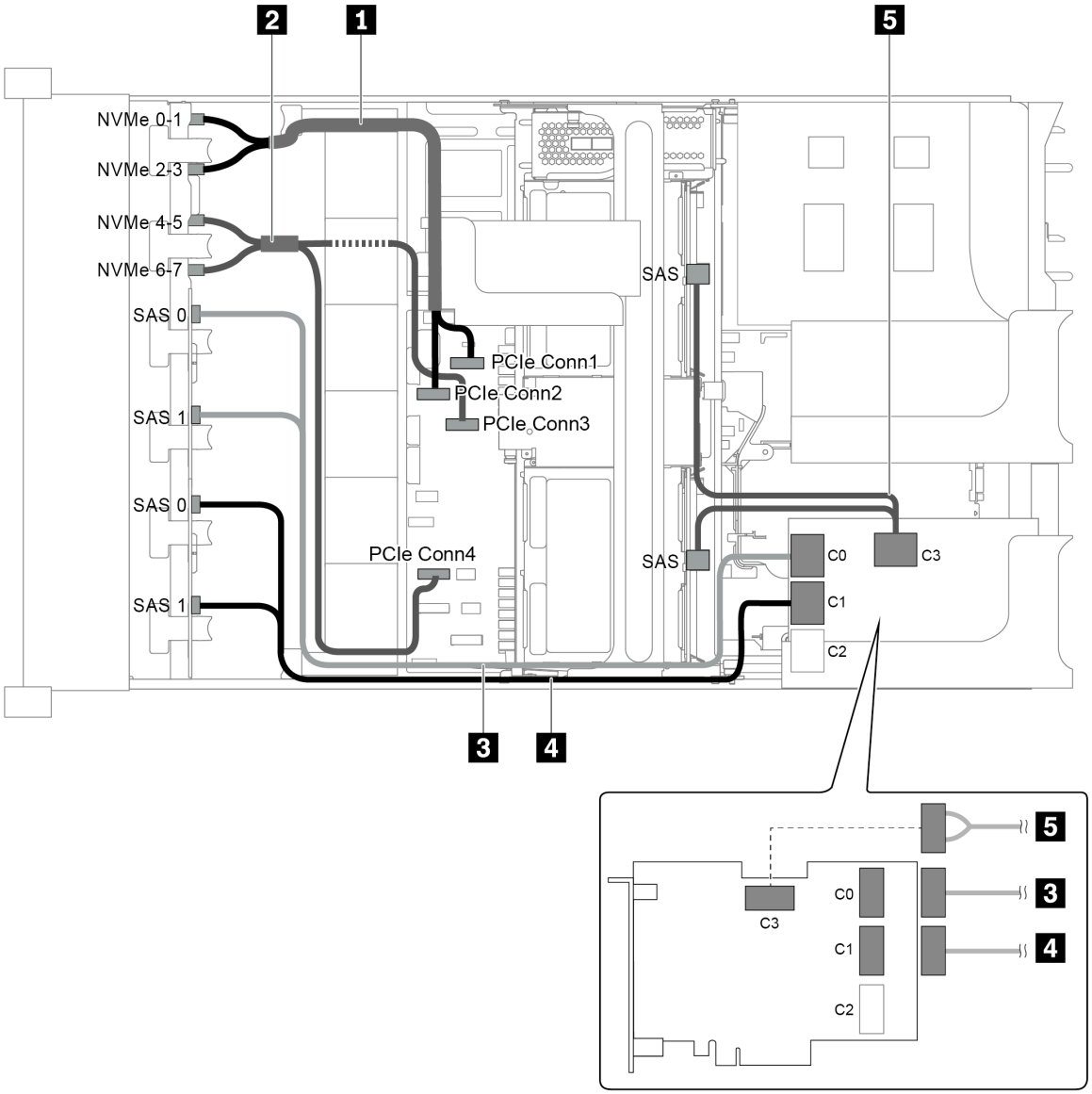

Figure 95. Cable routing for configuration with three front backplanes (8 NVMe + 2 x 8 SAS/SATA), one middle drive cage, and one 32i RAID adapter

Note: The 32i RAID adapter belongs to Gen 4. Ensure that you use the corresponding Gen 4 cable:

For cable 3 and 4: **ThinkSystem SR655 2.5" SAS/SATA 8-Bay X40 RAID Cable Kit**

For cable 5: **ThinkSystem SR655 2.5" & 3.5" SAS/SATA 4/8-Bay Middle Backplane X40 RAID Cable Kit**

Cable	From	To
1 NVMe signal cable	NVMe 0-1 connector on the NVMe backplane	PCIe connector 1 on the system board
	NVMe 2-3 connector on the NVMe backplane	PCIe connector 2 on the system board
2 NVMe signal cable	NVMe 4-5 connector on the NVMe backplane	PCIe connector 3 on the system board
	NVMe 6-7 connector on the NVMe backplane	PCIe connector 4 on the system board

Cable	From	To
3 SAS signal cable	SAS 0 and SAS 1 connectors on the SAS/SATA backplane 1	Connector C0 on the RAID adapter
4 SAS signal cable	SAS 0 and SAS 1 connectors on the SAS/SATA backplane 2	Connector C1 on the RAID adapter
5 SAS signal cable	SAS connector on the middle backplane 1	Connector C3 on the RAID adapter
	SAS connector on the middle backplane 2	

Server model with 24 x 2.5-inch front drive bays (NVMe)

This section provides cable routing information for the server model with three 8 x 2.5-inch NVMe front backplanes.

- "Configuration 1: three 8 x 2.5" NVMe front backplanes, two 810-4P or 1610-4P NVMe switch cards" on page 122
- "Configuration 2: three 8 x 2.5" NVMe front backplanes, one 1611-8P NVMe switch card" on page 123
- "Configuration 3: three 8 x 2.5" NVMe front backplanes, one rear drive cage (SAS/SATA), two 810-4P or 1610–4P NVMe switch cards, one 8i RAID/HBA adapter" on page 124
- "Configuration 4: three 8 x 2.5" NVMe front backplanes, one rear drive cage (NVMe), three 810-4P or 1610–4P NVMe switch cards" on page 125
- "Configuration 5: three 8 x 2.5" NVMe front backplanes, one middle drive cage (SAS/SATA), two 810-4P or 1610–4P NVMe switch cards, one 8i RAID/HBA adapter" on page 126
- "Configuration 6: three 8 x 2.5" NVMe front backplanes, one middle drive cage (NVMe), four 810-4P or 1610-4P NVMe switch cards" on page 128
- "Configuration 7: three 8 x 2.5" NVMe front backplanes, one middle drive cage (NVMe), two 1611-8P NVMe switch cards" on page 129

Configuration 1: three 8 x 2.5" NVMe front backplanes, two 810-4P or 1610-4P NVMe switch cards

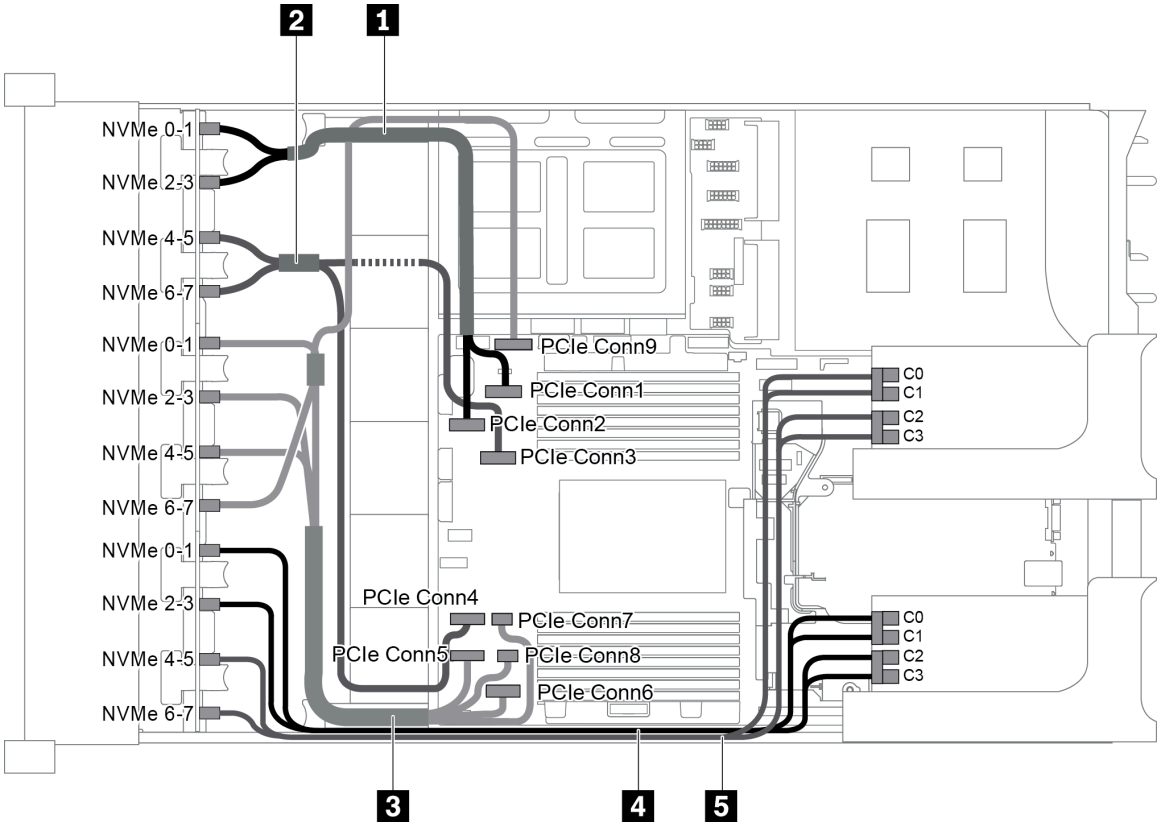

Figure 96. Cable routing for configuration with three 8 x 2.5" NVMe front backplanes and two 810-4P or 1610-4P NVMe switch cards

Cable	From	To
1 NVMe signal cable	NVMe 0-1 connector on the NVMe backplane 1	PCIe connector 1 on the system board
	NVMe 2-3 connector on the NVMe backplane 1	PCIe connector 2 on the system board
2 NVMe signal cable	NVMe 4-5 connector on the NVMe backplane 1	PCIe connector 3 on the system board
	NVMe 6-7 connector on the NVMe backplane 1	PCIe connector 4 on the system board
3 NVMe signal cable	NVMe 0-1 connector on the NVMe backplane 2	PCIe connector 5 on the system board
	NVMe 2-3 connector on the NVMe backplane 2	PCIe connector 6 on the system board
	NVMe 4-5 connector on the NVMe backplane 2	PCIe connectors 7 and 8 on the system board
	NVMe 6-7 connector on the NVMe backplane 2	PCIe connector 9 on the system board
4 NVMe signal cable	NVMe 0-1 connector on the NVMe backplane 3	Connectors C0 and C1 on the switch card 1
	NVMe 2-3 connector on the NVMe backplane 3	Connectors C2 and C3 on the switch card 1

Cable	From	To
5 NVMe signal cable	NVMe 4-5 connector on the NVMe backplane 3	Connectors C0 and C1 on the switch card 2
	NVMe 6-7 connector on the NVMe backplane 3	Connectors C2 and C3 on the switch card 2

Configuration 2: three 8 x 2.5" NVMe front backplanes, one 1611-8P NVMe switch card

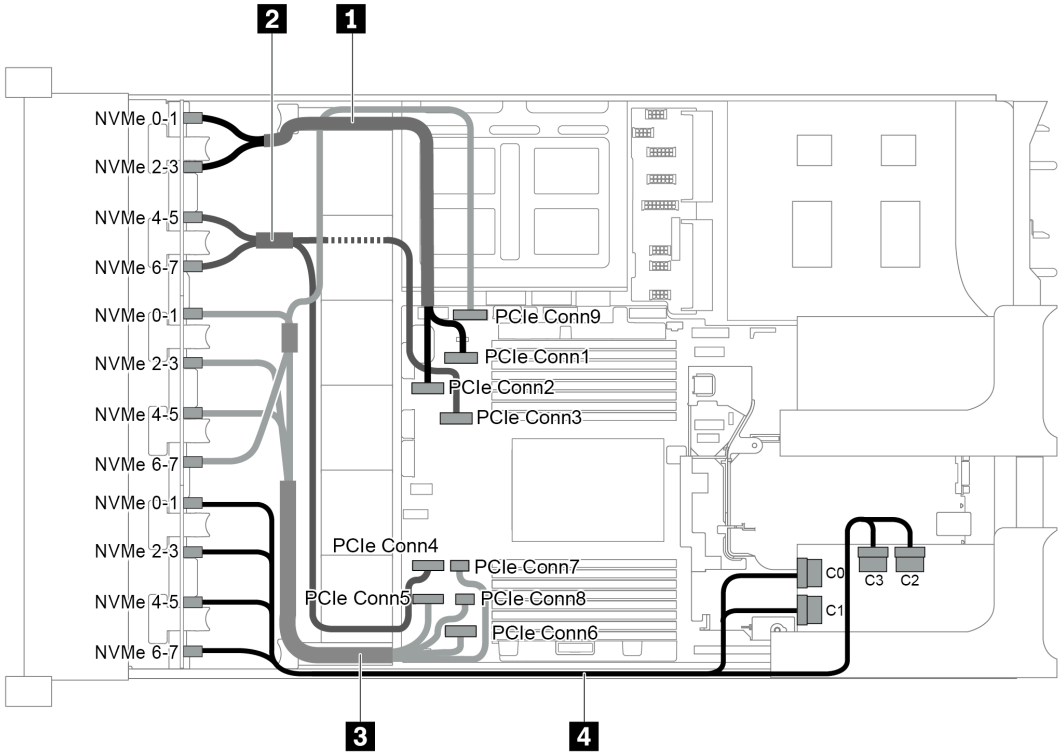

Figure 97. Cable routing for configuration with three 8 x 2.5" NVMe front backplanes and one 1611-8P NVMe switch card

Cable	From	To
1 NVMe signal cable	NVMe 0-1 connector on the NVMe backplane 1	PCIe connector 1 on the system board
	NVMe 2-3 connector on the NVMe backplane 1	PCIe connector 2 on the system board
2 NVMe signal cable	NVMe 4-5 connector on the NVMe backplane 1	PCIe connector 3 on the system board
	NVMe 6-7 connector on the NVMe backplane 1	PCIe connector 4 on the system board
3 NVMe signal cable	NVMe 0-1 connector on the NVMe backplane 2	PCIe connector 5 on the system board
	NVMe 2-3 connector on the NVMe backplane 2	PCIe connector 6 on the system board
	NVMe 4-5 connector on the NVMe backplane 2	PCIe connectors 7 and 8 on the system board
	NVMe 6-7 connector on the NVMe backplane 2	PCIe connector 9 on the system board

Cable	From	To
4 NVMe signal cable	NVMe 0-1 and 2-3 connectors on the NVMe backplane 3	Connectors C0 and C1 on the switch card 1
	NVMe 4-5 and 6-7 connectors on the NVMe backplane 3	Connectors C2 and C3 on the switch card 1

Configuration 3: three 8 x 2.5" NVMe front backplanes, one rear drive cage (SAS/SATA), two 810-4P or 1610–4P NVMe switch cards, one 8i RAID/HBA adapter

This configuration supports one rear drive cage with a 4 x 2.5 SAS/SATA drive backplane.

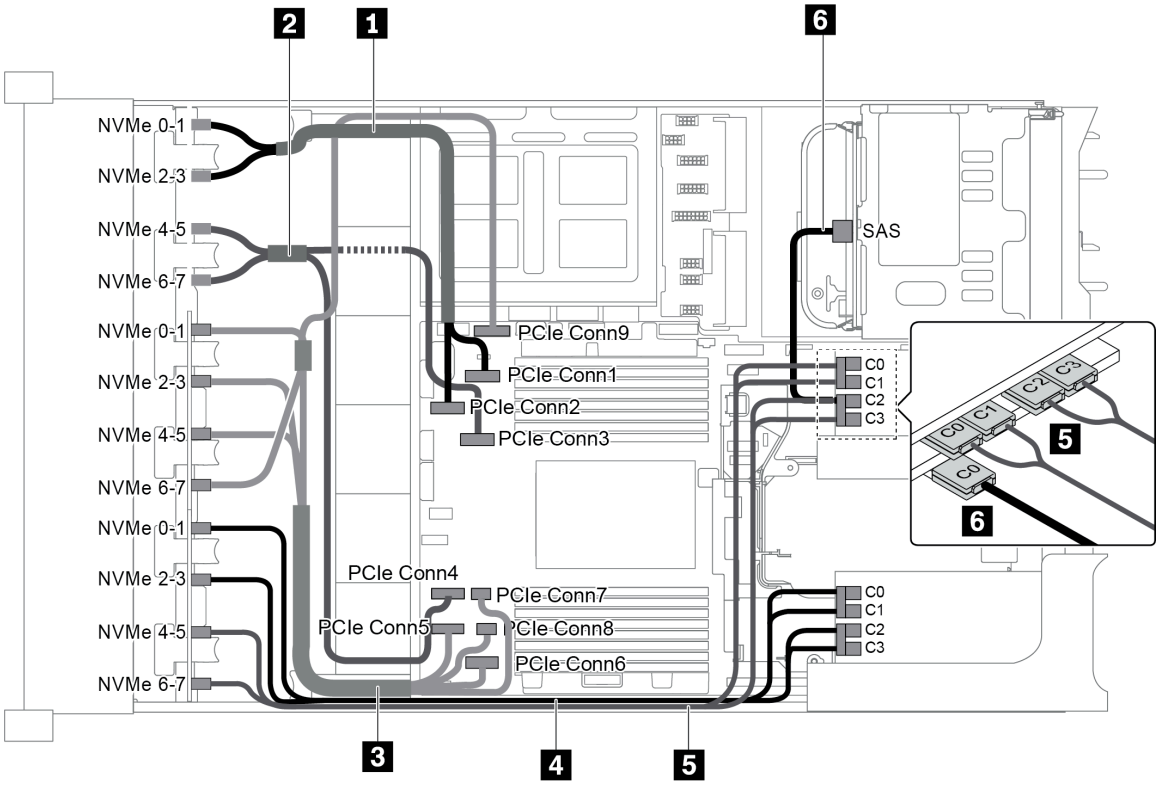

Figure 98. Cable routing for configuration with three 8 x 2.5" NVMe front backplanes, one rear drive cage (SAS/SATA), two 810-4P or 1610–4P NVMe switch cards, and one 8i RAID/HBA adapter

Cable	From	To
1 NVMe signal cable	NVMe 0-1 connector on the NVMe backplane 1	PCIe connector 1 on the system board
	NVMe 2-3 connector on the NVMe backplane 1	PCIe connector 2 on the system board
2 NVMe signal cable	NVMe 4-5 connector on the NVMe backplane 1	PCIe connector 3 on the system board
	NVMe 6-7 connector on the NVMe backplane 1	PCIe connector 4 on the system board
3 NVMe signal cable	NVMe 0-1 connector on the NVMe backplane 2	PCIe connector 5 on the system board
	NVMe 2-3 connector on the NVMe backplane 2	PCIe connector 6 on the system board

Cable	From	To
	NVMe 4-5 connector on the NVMe backplane 2	PCIe connectors 7 and 8 on the system board
	NVMe 6-7 connector on the NVMe backplane 2	PCIe connector 9 on the system board
4 NVMe signal cable	NVMe 0-1 connector on the NVMe backplane 3	Connectors C0 and C1 on the switch card 1
	NVMe 2-3 connector on the NVMe backplane 3	Connectors C2 and C3 on the switch card 1
5 NVMe signal cable	NVMe 4-5 connector on the NVMe backplane 3	Connectors C0 and C1 on the switch card 2
	NVMe 6-7 connector on the NVMe backplane 3	Connectors C2 and C3 on the switch card 2
6 SAS signal cable	SAS connector on the rear drive cage	Connector C0 on the 8i RAID/HBA adapter

Configuration 4: three 8 x 2.5" NVMe front backplanes, one rear drive cage (NVMe), three 810-4P or 1610–4P NVMe switch cards

This configuration supports one rear drive cage with a 4 x 2.5 NVMe drive backplane.

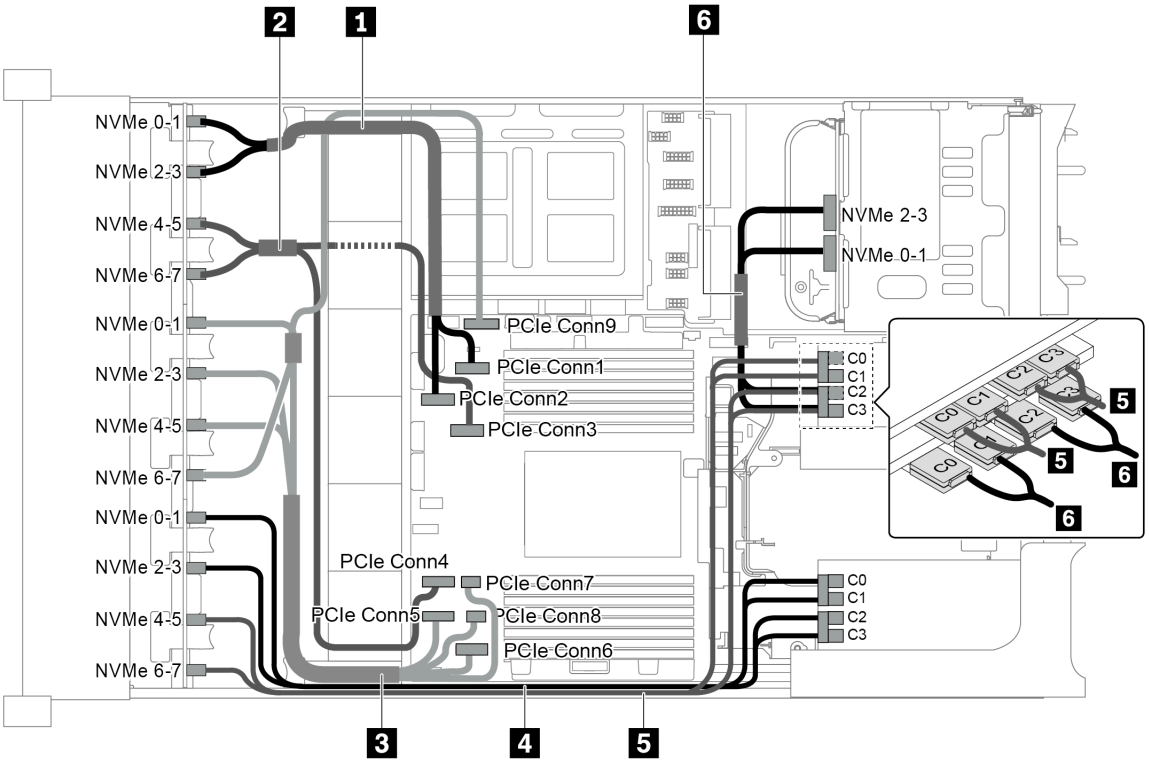

Figure 99. Cable routing for configuration with three 8 x 2.5" NVMe front backplanes, one rear drive cage (NVMe), and three 810-4P or 1610–4P NVMe switch cards

Cable	From	To
1 NVMe signal cable	NVMe 0-1 connector on the NVMe backplane 1	PCIe connector 1 on the system board

Cable	From	To
	NVMe 2-3 connector on the NVMe backplane 1	PCIe connector 2 on the system board
2 NVMe signal cable	NVMe 4-5 connector on the NVMe backplane 1	PCIe connector 3 on the system board
	NVMe 6-7 connector on the NVMe backplane 1	PCIe connector 4 on the system board
3 NVMe signal cable	NVMe 0-1 connector on the NVMe backplane 2	PCIe connector 5 on the system board
	NVMe 2-3 connector on the NVMe backplane 2	PCIe connector 6 on the system board
	NVMe 4-5 connector on the NVMe backplane 2	PCIe connectors 7 and 8 on the system board
	NVMe 6-7 connector on the NVMe backplane 2	PCIe connector 9 on the system board
4 NVMe signal cable	NVMe 0-1 connector on the NVMe backplane 3	Connectors C0 and C1 on the switch card 1
	NVMe 2-3 connector on the NVMe backplane 3	Connectors C2 and C3 on the switch card 1
5 NVMe signal cable	NVMe 4-5 connector on the NVMe backplane 3	Connectors C0 and C1 on the switch card 2
	NVMe 6-7 connector on the NVMe backplane 3	Connectors C2 and C3 on the switch card 2
6 NVMe signal cable	NVMe 0-1 connector on the rear NVMe backplane	Connectors C0 and C1 on the switch card 3
	NVMe 2-3 connector on the rear NVMe backplane	Connectors C2 and C3 on the switch card 3

Configuration 5: three 8 x 2.5" NVMe front backplanes, one middle drive cage (SAS/SATA), two 810-4P or 1610–4P NVMe switch cards, one 8i RAID/HBA adapter

This configuration supports one middle 2.5-inch drive cage with two 4 x 2.5-inch SAS/SATA drive backplanes.

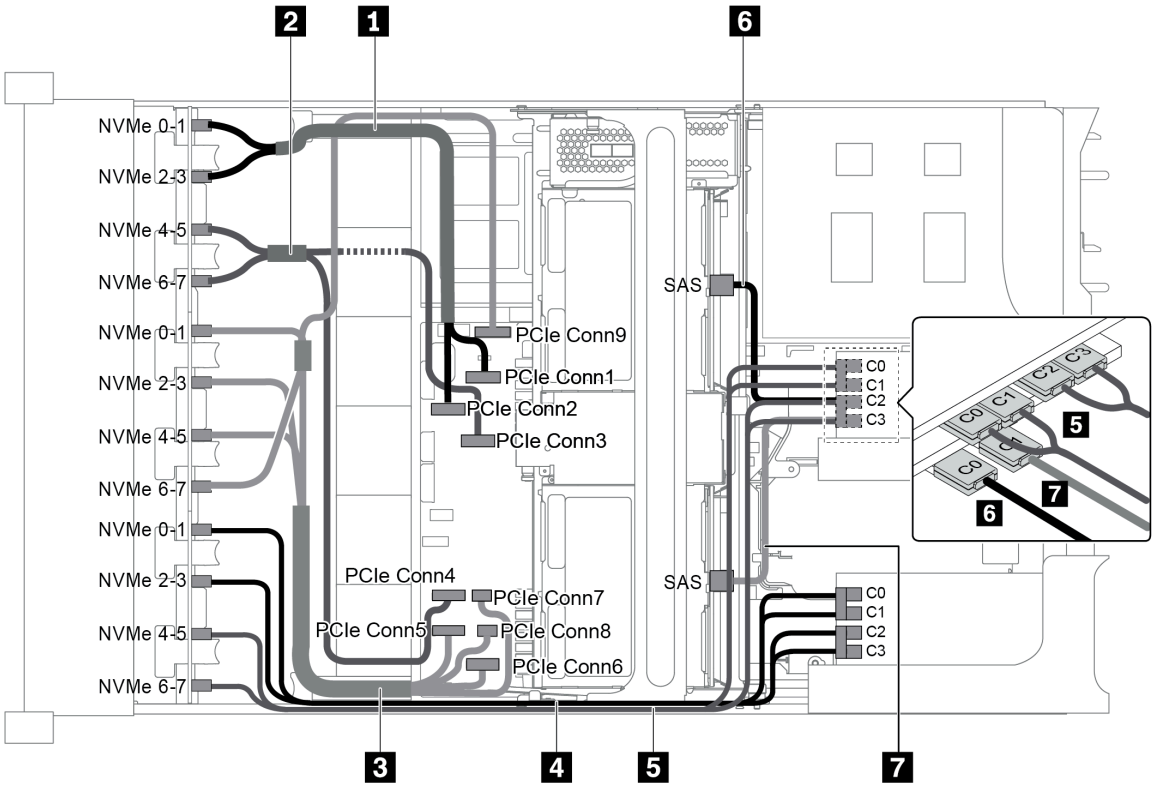

Figure 100. Cable routing for configuration with three 8 x 2.5" NVMe front backplanes, one middle drive cage (SAS/SATA), two 810-4P or 1610–4P NVMe switch cards, and one 8i RAID/HBA adapter

Note: When a Gen 4 RAID/HBA adapter is installed, ensure that you use the corresponding Gen 4 cable:

ThinkSystem SR655 2.5" & 3.5" SAS/SATA 4/8-Bay Middle Backplane X40 RAID Cable Kit

Cable	From	To
1 NVMe signal cable	NVMe 0-1 connector on the NVMe backplane 1	PCIe connector 1 on the system board
	NVMe 2-3 connector on the NVMe backplane 1	PCIe connector 2 on the system board
2 NVMe signal cable	NVMe 4-5 connector on the NVMe backplane 1	PCIe connector 3 on the system board
	NVMe 6-7 connector on the NVMe backplane 1	PCIe connector 4 on the system board
3 NVMe signal cable	NVMe 0-1 connector on the NVMe backplane 2	PCIe connector 5 on the system board
	NVMe 2-3 connector on the NVMe backplane 2	PCIe connector 6 on the system board
	NVMe 4-5 connector on the NVMe backplane 2	PCIe connectors 7 and 8 on the system board
	NVMe 6-7 connector on the NVMe backplane 2	PCIe connector 9 on the system board
4 NVMe signal cable	NVMe 0-1 connector on the NVMe backplane 3	Connectors C0 and C1 on the switch card 1

Cable	From	To
	NVMe 2-3 connector on the NVMe backplane 3	Connectors C2 and C3 on the switch card 1
5 NVMe signal cable	NVMe 4-5 connector on the NVMe backplane 3	Connectors C0 and C1 on the switch card 2
	NVMe 6-7 connector on the NVMe backplane 3	Connectors C2 and C3 on the switch card 2
6 SAS signal cable	SAS connector on the middle backplane 1	The 8i RAID/HBA adapter • Gen 3：C0 • Gen 4：C0
7 SAS signal cable	SAS connector on the middle backplane 2	The 8i RAID/HBA adapter • Gen 3：C1 • Gen 4：C0

Configuration 6: three 8 x 2.5" NVMe front backplanes, one middle drive cage (NVMe), four 810-4P or 1610-4P NVMe switch cards

This configuration supports one middle 2.5-inch drive cage with two 4 x 2.5-inch NVMe drive backplanes.

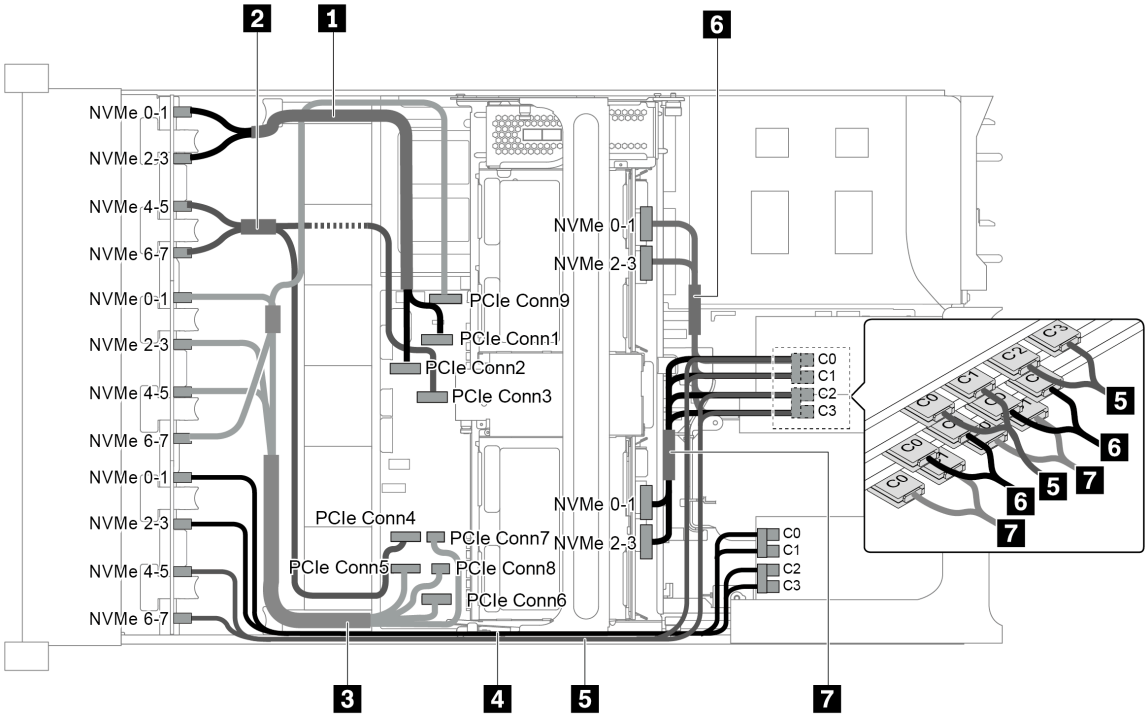

Figure 101. Cable routing for configuration with three 8 x 2.5" NVMe front backplanes, one middle drive cage (NVMe), and four 810-4P or 1610-4P NVMe switch cards

Cable	From	To
1 NVMe signal cable	NVMe 0-1 connector on the NVMe backplane 1	PCIe connector 1 on the system board
	NVMe 2-3 connector on the NVMe backplane 1	PCIe connector 2 on the system board

Cable	From	To
2 NVMe signal cable	NVMe 4-5 connector on the NVMe backplane 1	PCIe connector 3 on the system board
	NVMe 6-7 connector on the NVMe backplane 1	PCIe connector 4 on the system board
3 NVMe signal cable	NVMe 0-1 connector on the NVMe backplane 2	PCIe connector 5 on the system board
	NVMe 2-3 connector on the NVMe backplane 2	PCIe connector 6 on the system board
	NVMe 4-5 connector on the NVMe backplane 2	PCIe connectors 7 and 8 on the system board
	NVMe 6-7 connector on the NVMe backplane 2	PCIe connector 9 on the system board
4 NVMe signal cable	NVMe 0-1 connector on the NVMe backplane 3	Connectors C0 and C1 on the switch card 1
	NVMe 2-3 connector on the NVMe backplane 3	Connectors C2 and C3 on the switch card 1
5 NVMe signal cable	NVMe 4-5 connector on the NVMe backplane 3	Connectors C0 and C1 on the switch card 2
	NVMe 6-7 connector on the NVMe backplane 3	Connectors C2 and C3 on the switch card 2
6 NVMe signal cable	NVMe 0-1 connector on the middle backplane 1	Connectors C0 and C1 on the switch card 3
	NVMe 2-3 connector on the middle backplane 1	Connectors C2 and C3 on the switch card 3
7 SAS signal cable	NVMe 0-1 connector on the middle backplane 2	Connectors C0 and C1 on the switch card 4
	NVMe 2-3 connector on the middle backplane 2	Connectors C2 and C3 on the switch card 4

Configuration 7: three 8 x 2.5" NVMe front backplanes, one middle drive cage (NVMe), two 1611-8P NVMe switch cards

This configuration supports one middle 2.5-inch drive cage with two 4 x 2.5-inch NVMe drive backplanes.

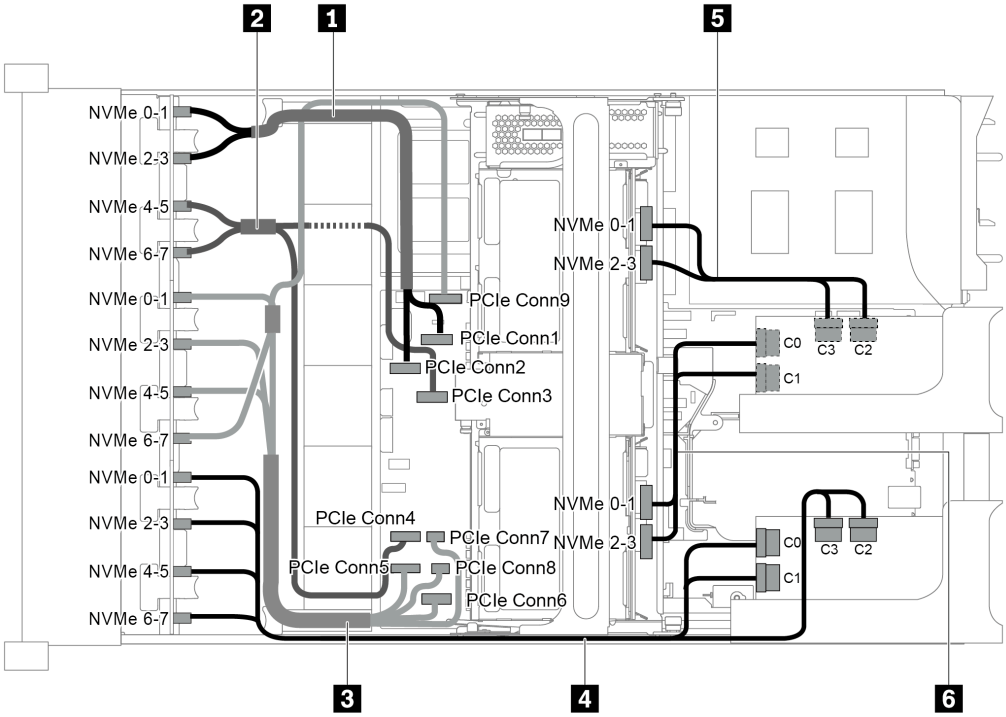

Figure 102. Cable routing for configuration with three 8 x 2.5" NVMe front backplanes, one middle drive cage (NVMe), and two 1611-8P NVMe switch cards

Cable	From	To
1 NVMe signal cable	NVMe 0-1 connector on the NVMe backplane 1	PCIe connector 1 on the system board
	NVMe 2-3 connector on the NVMe backplane 1	PCIe connector 2 on the system board
2 NVMe signal cable	NVMe 4-5 connector on the NVMe backplane 1	PCIe connector 3 on the system board
	NVMe 6-7 connector on the NVMe backplane 1	PCIe connector 4 on the system board
3 NVMe signal cable	NVMe 0-1 connector on the NVMe backplane 2	PCIe connector 5 on the system board
	NVMe 2-3 connector on the NVMe backplane 2	PCIe connector 6 on the system board
	NVMe 4-5 connector on the NVMe backplane 2	PCIe connectors 7 and 8 on the system board
	NVMe 6-7 connector on the NVMe backplane 2	PCIe connector 9 on the system board
4 NVMe signal cable	NVMe 0-1 and 2-3 connectors on the NVMe backplane 3	Connectors C0 and C1 on the switch card 1 in PCIe slot 1
	NVMe 4-5 and 6-7 connectors on the NVMe backplane 3	Connectors C2 and C3 on the switch card 1 in PCIe slot 1
5 NVMe signal cable	NVMe 0-1 and 2-3 connectors on the middle backplane 1	Connectors C0 and C1 on the switch card 2 in PCIe slot 5
6 NVMe signal cable	NVMe 0-1 and 2-3 connectors on the middle backplane 2	Connectors C2 and C3 on the switch card 2 in PCIe slot 5

Connections between the system board, PIB board, and fan board

This section provides connection information for the system board, PIB board, and fan board.

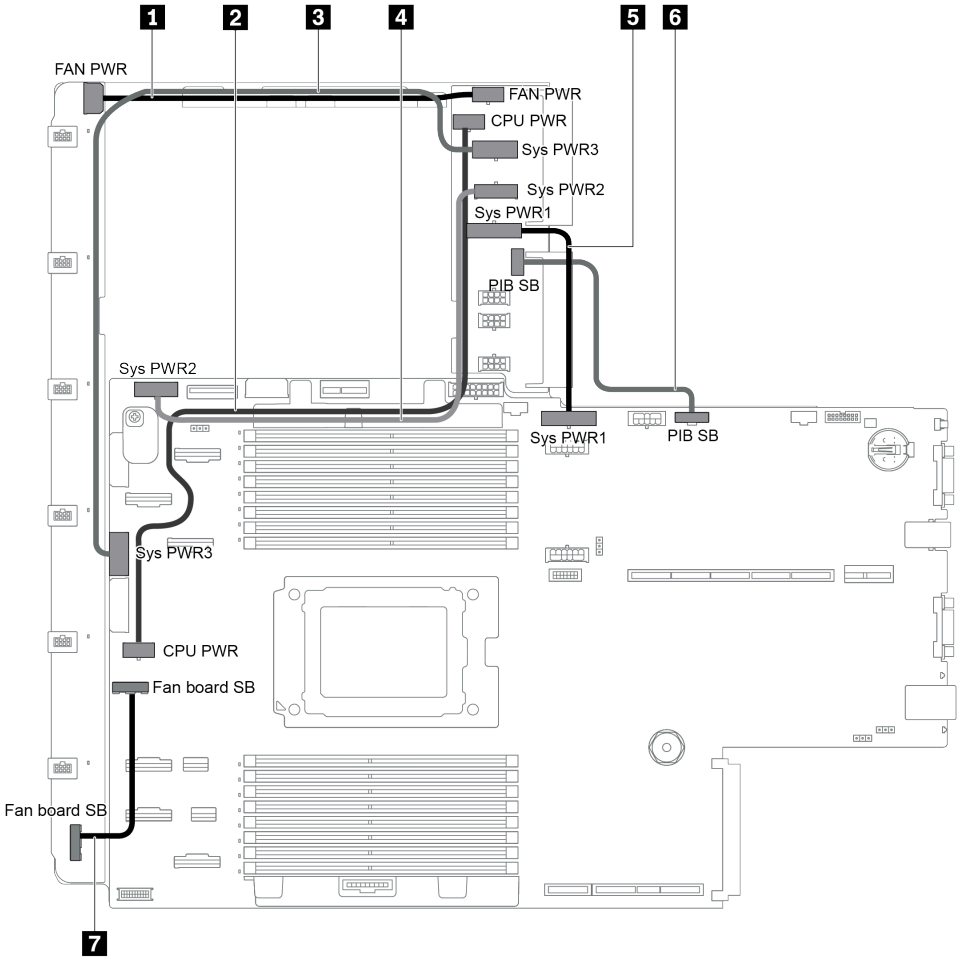

Figure 103. Connections between the system board, PIB board, and fan board

From	To
1 Fan power connector on the PIB board	Fan power connector on the fan board
2 CPU power connector on the PIB board	CPU power connector on the system board
3 System power connector 3 on the PIB board	System power connector 3 on the system board
4 System power connector 2 on the PIB board	System power connector 2 on the system board
5 System power connector 1 on the PIB board	System power connector 1 on the system board
6 Sideband connector on the PIB board	PIB sideband connector on the system board
7 Sideband connector on the fan board	Fan sideband connector on the system board

Chapter 3. Server hardware setup

To set up the server, install any options that have been purchased, cable the server, configure and update the firmware, and install the operating system.

Server setup checklist

Use the server setup checklist to ensure that you have performed all tasks that are required to set up your server.

The server setup procedure varies depending on the configuration of the server when it was delivered. In some cases, the server is fully configured and you just need to connect the server to the network and an ac power source, and then you can power on the server. In other cases, the server needs to have hardware options installed, requires hardware and firmware configuration, and requires an operating system to be installed.

The following steps describe the general procedure for setting up a server:

1. Unpack the server package. See "Server package contents" on page 2.
2. Set up the server hardware.
   a. Install any required hardware or server options. See the related topics in "Install server hardware options" on page 151.
   b. If necessary, install the server into a standard rack cabinet by using the rail kit shipped with the server. See the *Rack Installation Guide* that comes with optional rail kit.
   c. Connect the Ethernet cables and power cords to the server. See "Rear view" on page 23 to locate the connectors. See "Cable the server" on page 208 for cabling best practices.
   d. Power on the server. See "Turn on the server" on page 209.

      Note: You can access the management processor interface to configure the system without powering on the server. Whenever the server is connected to power, the management processor interface is available. For details about accessing the management server processor, see:

      https://thinksystem.lenovofiles.com/help/topic/7Y00/bmc_user_guide.pdf
   e. Validate that the server hardware was set up successfully. See "Validate server setup" on page 209.
3. Configure the system.
   a. Connect the BMC to the management network. See "Set network connection for the BMC" on page 211.
   b. Update the firmware for the server, if necessary. See "Update the firmware" on page 211.
   c. Configure the firmware for the server. See "Configure the firmware" on page 214.

      The following information is available for RAID configuration:

      - https://lenovopress.com/lp0578-lenovo-raid-introduction
      - https://lenovopress.com/lp0579-lenovo-raid-management-tools-and-resources
   d. Install the operating system. See "Deploy the operating system" on page 215.
   e. Back up the server configuration. See "Back up the server configuration" on page 215.
   f. Install the applications and programs for which the server is intended to be used.

Installation Guidelines

Use the installation guidelines to install components in your server.

Before installing optional devices, read the following notices carefully:

Attention: Prevent exposure to static electricity, which might lead to system halt and loss of data, by keeping static-sensitive components in their static-protective packages until installation, and handling these devices with an electrostatic-discharge wrist strap or other grounding system.

- Read the safety information and guidelines to ensure your safety at work.
  - A complete list of safety information for all products is available at:

    https://pubs.lenovo.com/safety_documentation/
  - The following guidelines are available as well: "Handling static-sensitive devices" on page 136 and "Working inside the server with the power on" on page 136.
- Make sure the components you are installing are supported by the server. For a list of supported optional components for the server, see https://serverproven.lenovo.com/.
- When you install a new server, download and apply the latest firmware. This will help ensure that any known issues are addressed, and that your server is ready to work with optimal performance. Go to ThinkSystem SR655 Drivers and Software to download firmware updates for your server.

  Important: Some cluster solutions require specific code levels or coordinated code updates. If the component is part of a cluster solution, verify the latest Best Recipe code level menu for cluster supported firmware and driver before you update the code.
- It is good practice to make sure that the server is working correctly before you install an optional component.
- Keep the working area clean, and place removed components on a flat and smooth surface that does not shake or tilt.
- Do not attempt to lift an object that might be too heavy for you. If you have to lift a heavy object, read the following precautions carefully:
  - Make sure that you can stand steadily without slipping.
  - Distribute the weight of the object equally between your feet.
  - Use a slow lifting force. Never move suddenly or twist when you lift a heavy object.
  - To avoid straining the muscles in your back, lift by standing or by pushing up with your leg muscles.
- Back up all important data before you make changes related to the disk drives.
- Have a small flat-blade screwdriver, a small Phillips screwdriver, a T8 torx screwdriver, and a T20 torx screwdriver available.
- To view the error LEDs on the system board and internal components, leave the power on.
- You do not have to turn off the server to remove or install hot-swap power supplies, hot-swap fans, or hot-plug USB devices. However, you must turn off the server before you perform any steps that involve removing or installing adapter cables, and you must disconnect the power source from the server before you perform any steps that involve removing or installing a riser card.
- Blue on a component indicates touch points, where you can grip to remove a component from or install it in the server, open or close a latch, and so on.
- The Red strip on the drives, adjacent to the release latch, indicates that the drive can be hot-swapped if the server and operating system support hot-swap capability. This means that you can remove or install the drive while the server is still running.

Note: See the system specific instructions for removing or installing a hot-swap drive for any additional procedures that you might need to perform before you remove or install the drive.

- After finishing working on the server, make sure you reinstall all safety shields, guards, labels, and ground wires.

Safety inspection checklist

Use the information in this section to identify potentially unsafe conditions with your server. As each machine was designed and built, required safety items were installed to protect users and service technicians from injury.

Notes:

1. The product is not suitable for use at visual display workplaces according to §2 of the Workplace Regulations.
2. The set-up of the server is made in the server room only.

CAUTION:
This equipment must be installed or serviced by trained personnel, as defined by the NEC, IEC 62368-1 & IEC 60950-1, the standard for Safety of Electronic Equipment within the Field of Audio/Video, Information Technology and Communication Technology. Lenovo assumes you are qualified in the servicing of equipment and trained in recognizing hazards energy levels in products. Access to the equipment is by the use of a tool, lock and key, or other means of security, and is controlled by the authority responsible for the location.

Important: Electrical grounding of the server is required for operator safety and correct system function. Proper grounding of the electrical outlet can be verified by a certified electrician.

Use the following checklist to verify that there are no potentially unsafe conditions:

1. Make sure that the power is off and the power cord is disconnected.
2. Check the power cord.
   - Make sure that the third-wire ground connector is in good condition. Use a meter to measure third-wire ground continuity for 0.1 ohm or less between the external ground pin and the frame ground.
   - Make sure that the power cord is the correct type.

     To view the power cords that are available for the server:

     a. Go to:

     http://dcsc.lenovo.com/#/

     b. Click **Preconfigured Model** or **Configure to order**.
     c. Enter the machine type and model for your server to display the configurator page.
     d. Click **Power → Power Cables** to see all line cords.
   - Make sure that the insulation is not frayed or worn.
3. Check for any obvious non-Lenovo alterations. Use good judgment as to the safety of any non-Lenovo alterations.
4. Check inside the server for any obvious unsafe conditions, such as metal filings, contamination, water or other liquid, or signs of fire or smoke damage.
5. Check for worn, frayed, or pinched cables.
6. Make sure that the power-supply cover fasteners (screws or rivets) have not been removed or tampered with.

System reliability guidelines

The system reliability guidelines to ensure proper system cooling.

Make sure the following requirements are met:

- When the server comes with redundant power, a power supply must be installed in each power-supply bay.
- Adequate space around the server must be spared to allow server cooling system to work properly. Leave approximately 50 mm (2.0 in.) of open space around the front and rear of the server. Do not place any object in front of the fans.
- For proper cooling and airflow, refit the server cover before you turn the power on. Do not operate the server for more than 30 minutes with the server cover removed, for it might damage server components.
- Cabling instructions that come with optional components must be followed.
- A failed fan must be replaced within 48 hours since malfunction.
- A removed hot-swap fan must be replaced within 30 seconds after removal.
- A removed hot-swap drive must be replaced within two minutes after removal.
- A removed hot-swap power supply must be replaced within two minutes after removal.
- Every air baffle that comes with the server must be installed when the server starts (some servers might come with more than one air baffle). Operating the server with a missing air baffle might damage the processor.
- All processor sockets must contain either a socket cover or a processor with heat sink.
- When more than one processor is installed, fan population rules for each server must be strictly followed.

Working inside the server with the power on

Guidelines to work inside the server with the power on.

Attention: The server might stop and loss of data might occur when internal server components are exposed to static electricity. To avoid this potential problem, always use an electrostatic-discharge wrist strap or other grounding systems when working inside the server with the power on.

- Avoid loose-fitting clothing, particularly around your forearms. Button or roll up long sleeves before working inside the server.
- Prevent your necktie, scarf, badge rope, or long hair from dangling into the server.
- Remove jewelry, such as bracelets, necklaces, rings, cuff links, and wrist watches.
- Remove items from your shirt pocket, such as pens and pencils, in case they fall into the server as you lean over it.
- Avoid dropping any metallic objects, such as paper clips, hairpins, and screws, into the server.

Handling static-sensitive devices

Use this information to handle static-sensitive devices.

Attention: Prevent exposure to static electricity, which might lead to system halt and loss of data, by keeping static-sensitive components in their static-protective packages until installation, and handling these devices with an electrostatic-discharge wrist strap or other grounding system.

- Limit your movement to prevent building up static electricity around you.
- Take additional care when handling devices during cold weather, for heating would reduce indoor humidity and increase static electricity.

- Always use an electrostatic-discharge wrist strap or other grounding system, particularly when working inside the server with the power on.
- While the device is still in its static-protective package, touch it to an unpainted metal surface on the outside of the server for at least two seconds. This drains static electricity from the package and from your body.
- Remove the device from the package and install it directly into the server without putting it down. If it is necessary to put the device down, put it back into the static-protective package. Never place the device on the server or on any metal surface.
- When handling a device, carefully hold it by the edges or the frame.
- Do not touch solder joints, pins, or exposed circuitry.
- Keep the device from others' reach to prevent possible damages.

Memory module installation rules

Memory modules must be installed in a specific order based on the memory configuration that you implement on your server.

Your server has 16 memory slots and supports:

- Minimum: 8 GB
- Maximum: 2 TB
- Type (depending on the model):
  - TruDDR4 2933, single-rank or dual-rank, 8 GB/16 GB/32 GB/64 GB RDIMM
  - TruDDR4 3200, dual-rank, 16 GB/32 GB/64 GB RDIMM
  - TruDDR4 2933, quad-rank, 128 GB 3DS RDIMM
  - TruDDR4 3200, quad-rank, 128 GB 3DS RDIMM (Only 7003 series processors are supported.)

For a list of supported memory options, see: https://serverproven.lenovo.com/

Follow below rules when you install or replace a memory module:

- Memory modules in your server must be the same type.
- Memory modules from different vendors are supported.
- Memory modules with different capacities are supported. Install the memory module that has the higher capacity first.
- Memory modules with different ranks are supported. Install the memory module with the highest rank first.
- Do not mix x4 and x8 DIMMs in the same channel.
- DIMMs of 3200 MHz and 2933 MHz are supported:
  - 2933 MHz DIMMs: operate at 2933 MHz for both 1 DIMM per channel and 2 DIMMs per channel.
  - 3200 MHz DIMMs: operate at 3200 MHz when 1 DIMM per channel, but operate at 2933 MHz when 2 DIMMs per channel.
  - Mixing of 2933 MHz and 3200 MHz DIMMs is supported in different channels, operating at 2933 MHz.

  Note: Operating speed depends on the processor model. For example, if the processor only supports a memory bus speed of 2666 MHz, all the installed DIMMs operate at 2666 MHz.
- Install a memory module filler if there is no memory module installed in the slot.
- For 12x3.5 HDD and middle HDD configurations, 128GB DIMM is not supported.

The following illustration helps you to locate the memory slots on the system board.

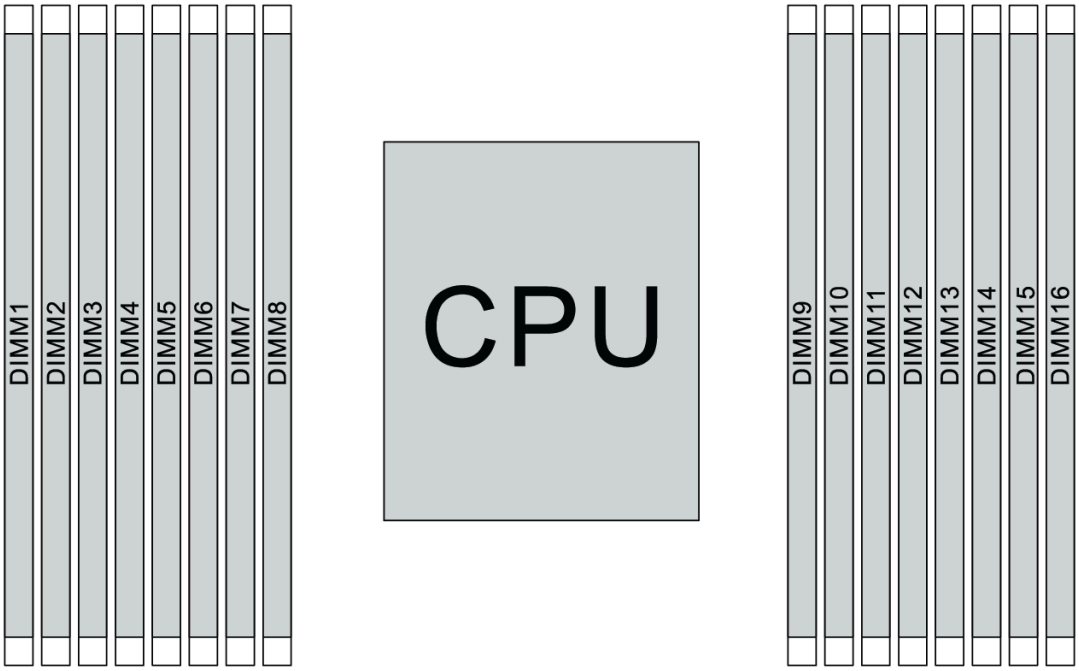

Figure 104. DIMM locations

The following table shows the relationship between the processors, memory controllers, memory channels, slots, and DIMM numbers. The system has eight channels, and supports up to two DIMMs per channel. DIMMs must be populated from farthest slot (slot 1) to closest slot (slot 0) to the processor on a per-channel basis when a data bus daisy chain topology is used. DIMMs may be populated in either slot on a per-channel basis when a data bus balanced tee route topology is used.

Table 10. DIMM installation order

Unified Memory Controller (UMC)	**UMC2**		**UMC3**		**UMC1**		**UMC0**		**UMC6**		**UMC7**		**UMC5**		**UMC4**	
Channel (CH)	**D**		**C**		**B**		**A**		**E**		**F**		**G**		**H**	
CH slot	**1**	**0**	**1**	**0**	**1**	**0**	**1**	**0**	**0**	**1**	**0**	**1**	**0**	**1**	**0**	**1**
DIMM number	**1**	**2**	**3**	**4**	**5**	**6**	**7**	**8**	**9**	**10**	**11**	**12**	**13**	**14**	**15**	**16**
1 DIMM			3													
2 DIMMs	1		3													
3 DIMMs	1		3											14		
4 DIMMs	1		3											14		16
5 DIMMs	1		3				7							14		16
6 DIMMs	1		3		5		7							14		16
7 DIMMs	1		3		5		7			10				14		16
8 DIMMs	1		3		5		7			10		12		14		16
9 DIMMs	1		3	4	5		7			10		12		14		16

Table 10. DIMM installation order (continued)

Unified Memory Controller (UMC)	**UMC2**		**UMC3**		**UMC1**		**UMC0**		**UMC6**		**UMC7**		**UMC5**		**UMC4**	
Channel (CH)	**D**		**C**		**B**		**A**		**E**		**F**		**G**		**H**	
CH slot	**1**	**0**	**1**	**0**	**1**	**0**	**1**	**0**	**0**	**1**	**0**	**1**	**0**	**1**	**0**	**1**
DIMM number	**1**	**2**	**3**	**4**	**5**	**6**	**7**	**8**	**9**	**10**	**11**	**12**	**13**	**14**	**15**	**16**
10 DIMMs	1	2	3	4	5		7			10		12		14		16
11 DIMMs	1	2	3	4	5		7			10		12	13	14		16
12 DIMMs	1	2	3	4	5		7			10		12	13	14	15	16
13 DIMMs	1	2	3	4	5		7	8		10		12	13	14	15	16
14 DIMMs	1	2	3	4	5	6	7	8		10		12	13	14	15	16
15 DIMMs	1	2	3	4	5	6	7	8	9	10		12	13	14	15	16
16 DIMMs	1	2	3	4	5	6	7	8	9	10	11	12	13	14	15	16

Note: There are performance-optimized 6-DIMM and 12-DIMM configurations for server models with 7003 series CPU. For details, see the table below.

DIMM Qty	**DIMM population order**
6	**1, 3, 7, 10, 14, 16**
12	**1, 2, 3, 4, 7, 8, 9, 10, 13, 14, 15, 16**

Technical rules

This topic provides technical rules for the server.

- “Drive bay configurations and requirements” on page 139
- “Technical rules for processor and heat sink” on page 142
- “Technical rules for system fans” on page 143
- “Technical rules for HBA/RAID adapters” on page 144
- “Technical rules for GPU adapters” on page 145
- “Technical rules for PCIe Flash storage adapters” on page 151

Drive bay configurations and requirements

This topic describes the drive bay configurations supported by the server and the requirements for hardware configurations.

The server supports hot-swap drives in three drive zones:

- Front bays: up to 12 x 3.5-inch or 24 x 2.5-inch hot-swap bays
- Middle (internal) bays: up to 4 x 3.5-inch or 8 x 2.5-inch hot-swap bays
- Rear bays: up to 4 x 3.5-inch or 4 x 2.5-inch hot-swap bays

Note: VMware ESXi does not support ThinkSystem 2.5 U.3 6500 ION 30.72TB Read Intensive NVMe PCIe 4.0 x4 HS SSD.

Depending on the server chassis and hardware configurations, the server supports different drive bay combinations.

- "Chassis with 3.5-inch front drive bays" on page 140
- "Chassis with 2.5-inch front drive bays" on page 141

Chassis with 3.5-inch front drive bays

The following table shows the supported drive bay combinations for the chassis with 3.5-inch front drive bays.

Notes:

- NVMe drives are only supported in the front drive bays (bays 8–11), using the AnyBay backplane (which offers 4 x NVMe capable drive bays).
- When the front drive bays are 3.5-inch bays, the middle drive bays are also 3.5-inch bays. However, the rear drive bays can be either 2.5-inch SAS/SATA or 3.5-inch SAS/SATA bays.
- When the front SAS/SATA backplane is connected to PCIe connectors on the system board, only SATA drives are supported. No SAS drives are supported.
- For the middle/rear drive cage with an NVMe backplane, only 7 mm NVMe drives (installed in the 15 mm-height drive trays) are supported. The 15 mm drives are not supported.
- To support a middle drive cage:
  - Performance fans (speed of 29000 RPM) must be installed.
  - The processor TDP must be lower than or equal to 155 watts.
  - The ambient temperature must be lower than or equal to 35°C (95°F).
  - All empty memory slots must be covered with a memory module filler or new memory module to ensure optimal air flow.
- To support a rear drive cage:
  - Performance fans (speed of 29000 RPM) must be installed.
  - The processor TDP must be lower than or equal to 225 watts.
  - The ambient temperature must be lower than or equal to 35°C (95°F).

3.5": 3.5-inch; 2.5": 2.5-inch

Config	Total drives	Front bays (3.5")		Mid bays (3.5")	Rear bays (3.5" or 2.5")	
		SAS/SATA	AnyBay	SAS/SATA	3.5" SAS/SATA	2.5" SAS/SATA
3.5-inch chassis – SAS/SATA drives only						
A	8	**8**	0	0	0	0
B	12	**12**	0	0	0	0
C	16	**12**	0	0	**4**	0
D	16	**12**	0	0	0	**4**
E	20	**12**	0	**4**	**4**	0
F	20	**12**	0	**4**	0	**4**
3.5-inch chassis – SAS/SATA and AnyBay drives						

Config	Total drives	Front bays (3.5")		Mid bays (3.5")	Rear bays (3.5" or 2.5")	
		SAS/SATA	AnyBay	SAS/SATA	3.5" SAS/SATA	2.5" SAS/SATA
G	12	**8**	**4**	0	0	0
H	16	**8**	**4**	0	**4**	0
I	16	**8**	**4**	0	0	**4**
J	20	**8**	**4**	**4**	**4**	0
K	20	**8**	**4**	**4**	0	**4**
3.5-inch chassis – no backplanes, no drives						
L	0	12 (with drive fillers)	0	0	0	0

Chassis with 2.5-inch front drive bays

The following table shows the supported drive combinations for the chassis with 2.5-inch front drive bays.

Notes:

- With the 2.5-inch chassis, all drive bays are 2.5-inch bays. No 3.5-inch drives are supported.
- Middle drive bays and rear drive bays cannot be used concurrently.
- When the front SAS/SATA backplane is connected to PCIe connectors on the system board, only SATA drives are supported. No SAS drives are supported.
- For the middle/rear drive cage with an NVMe backplane, only 7 mm NVMe drives (installed in the 15 mm-height drive trays) are supported. The 15 mm drives are not supported.
- To support a middle drive cage:
  - Performance fans (speed of 29000 RPM) must be installed.
  - The processor TDP must be lower than or equal to 155 watts.
  - The ambient temperature must be lower than or equal to 35°C (95°F).

    Note that the ambient temperature must be lower than or equal to 30°C (86°F) for the server model with 24 NVMe front drive bays.
  - All empty memory slots must be covered with a memory module filler or new memory module to ensure optimal air flow.
- To support a rear drive cage:
  - Performance fans (speed of 29000 RPM) must be installed.
  - The processor TDP must be lower than or equal to 225 watts.
  - The ambient temperature must be lower than or equal to 35°C (95°F).

3.5": 3.5-inch; 2.5": 2.5-inch

Config	Total drives	Front bays (2.5")		Mid bays (2.5")		Rear bays (2.5")	
		SAS/SATA	NVMe	SAS/SATA	NVMe	SAS/SATA	NVMe
2.5-inch chassis – SAS/SATA drives only							
A	8	**8**	0	0	0	0	0
B	16	**16**	0	0	0	0	0
C	20	**16**	0	0	0	**4**	0

Config	Total drives	Front bays (2.5")		Mid bays (2.5")		Rear bays (2.5")	
		SAS/SATA	NVMe	SAS/SATA	NVMe	SAS/SATA	NVMe
D	24	**24**	0	0	0	0	0
E	28	**24**	0	0	0	**4**	0
F	32	**24**	0	**8**	0	0	0
2.5-inch chassis – SAS/SATA and NVMe drives in the front bays							
G	16	**8**	**8**	0	0	0	0
H	20	**8**	**8**	0	0	**4**	0
I	24	**16**	**8**	0	0	0	0
J	28	**16**	**8**	0	0	**4**	0
K	32	**16**	**8**	**8**	0	0	0
2.5-inch chassis – only NVMe drives in the front bays							
L	8	0	**8**	0	0	0	0
M	16	0	**16**	0	0	0	0
N	20	0	**16**	0	0	**4**	0
O	20	0	**16**	0	0	0	**4**
P	24	0	**24**	0	0	0	0
Q	28	0	**24**	0	0	**4**	0
R	28	0	**24**	0	0	0	**4**
S	32	0	**24**	**8**	0	0	0
T	32	0	**24**	0	**8**	0	0
2.5-inch chassis – no backplanes, no drives							
U	0	24 (with drive fillers)	0	0	0	0	0

Technical rules for processor and heat sink

Processor and heat sink selection rules:

Heat sink	Configuration
1U Standard	• Processor TDP ≤ 200 watts • With GPU or mid drive bays
1U Performance	• Processor TDP ≥ 225 watts • With GPU or mid drive bays
2U Performance	Without GPU or mid drive bays

Note: For the system to support 7203, 7203P, 7303, 7303P, 7643P, and 7663P processors, the minimum UEFI version is ***cfe138f-7.10***, and the minimum XCC version is ***ambt46n-6.73***.

Rules about 280-watt processor selection

Depending on your configuration, if you need to install the 280-watt processor, follow the below rules:

- For better cooling, if your server is configured with a 280-watt processor, install a memory module filler or a new memory module to cover the slot.
- For server model with twelve 3.5-inch SAS/SATA front drives, or with eight 3.5-inch SAS/SATA and four 3.5-inch Anybay front drives, if installed with 280-watt processor, it can support up to 35°C (95°F) ambient, but can not support OCP Ethernet adapter, or any PCIe card in PCIe slot 1, slot 2, and slot 3.
- For server model with twelve 3.5-inch SAS/SATA front drives and four 3.5-inch rear drives, or with eight 3.5-inch SAS/SATA, four 3.5-inch Anybay front drives and four 3.5-inch rear drives, if installed with a 280-watt processor, it can support up to 30°C (86°F) ambient, but can not support OCP Ethernet adapter, or any PCIe card in PCIe slot 3.
- For server model with twelve 3.5-inch SAS/SATA front drives, or with eight 3.5-inchSAS/SATA and four 3.5-inch Anybay front drives, if installed with middle drives, 280-watt processor is not supported.
- For server model with twenty four 2.5-inch SAS/SATA front drives, or with twenty four 2.5-inch Anybay, or with sixteen 2.5-inch SAS/SATA and eight Anybay front drives, if installed with 280-watt processor, it can support up to 35°C (95°F) ambient, but can not support the following OCP Ethernet adapters:
  - ThinkSystem Broadcom 57416 10GBASE-T 2-port OCP Ethernet Adapter
  - ThinkSystem Broadcom 57454 10/25GbE SFP28 4-port OCP Ethernet Adapter
  - ThinkSystem Broadcom 57416 10GBASE-T 2-port + 5720 1GbE 2-port OCP Ethernet Adapter
  - ThinkSystem Broadcom 57454 10GBASE-T 4-port OCP Ethernet Adapter

Rules about 155-watt 16C processor (7313 or 7313P) selection

Depending on your configuration, if you need to install the 155-watt 16C processor, follow the below rules:

- For server model with twelve 3.5-inch SAS/SATA front drives and four 3.5-inch SAS/SATA middle drives, if installed with 155-watt 16C processor, it can support up to 30°C (86°F) ambient.
- For server model with eight 3.5-inch SAS/SATA front drives and four 3.5-inch Anybay front drives, as well as four 3.5-inch SAS/SATA middle drives, if installed with a 155-watt 16C processor, it can support up to 30°C (86°F) ambient.

Technical rules for system fans

Note: If there is an OCP 3.0 Ethernet adapter installed, when the system is powered off but still plugged in to AC power, fans 5 and fan 6 will continue to spin at a much lower speed. This is the system design to provide proper cooling for the OCP 3.0 Ethernet adapter.

Follow the following rules for system fan selection:

- Standard fan: for processor with TDP of 155 watts or lower
- Performance fan (speed of 29000 RPM):
  - Processor with TDP of 180 watts or higher
  - Middle drive cage
  - Rear drive cage
  - M.2 drive
  - GPU adapter
  - PCIe SSD adapter
  - Ethernet adapter of 100 GbE or higher

Five system fans (fan 2 to fan 6) are adequate to provide proper cooling, if there is no M.2 drive, internal PCIe adapter, middle or rear drive cage, GPU adapter, PCIe SSD adapter, or Ethernet adapter of 10 GbE or higher on PCIe slot 7/8 installed. However, you must keep the location for fan 1 occupied by a fan filler to ensure proper airflow.

Technical rules for HBA/RAID adapters

The following table lists the HBA/RAID adapters used for the internal storage of the server.

HBA/RAID adapters	Maximum supported	Slot selection priority	Suggested priority (between adapters)	Super capacitor
ThinkSystem 430-8i SAS/ SATA 12Gb HBA	4	9, 1, 2, 3, 4, 5, 6	16	No
ThinkSystem 430-16i SAS/ SATA 12Gb HBA	2	1, 2, 3, 4, 5, 6	16	No
ThinkSystem 430-8e SAS/ SATA 12Gb HBA	5	1, 2, 4, 5, 7	19	No
ThinkSystem 430-16e SAS/ SATA 12Gb HBA	5	1, 2, 4, 5, 7	19	No
ThinkSystem 440-8i SAS/ SATA PCIe Gen4 12Gb HBA	4	9, 1, 2, 3, 4, 5, 6	16	No
ThinkSystem 440-16i SAS/ SATA PCIe Gen4 12Gb HBA	2	1, 2, 3, 4, 5, 6	16	No
ThinkSystem 440-8e SAS/ SATA PCIe Gen4 12Gb HBA	5	1, 2, 4, 5, 7	19	No
ThinkSystem 440-16e 12Gb HBA	5	1, 2, 4, 5, 7	19	No
ThinkSystem RAID 530-8i PCIe 12Gb Adapter	4	9, 1, 2, 3, 4, 5, 6	15	No
ThinkSystem RAID 540-8i PCIe Gen4 12Gb Adapter	4	9, 1, 2, 3, 4, 5, 6	15	No
ThinkSystem RAID 730-8i 1GB Cache PCIe 12Gb Adapter	3	9, 1, 2, 3, 4, 5, 6	14	No
ThinkSystem RAID 730-8i 2GB Flash PCIe 12Gb Adapter	3	9, 1, 2, 3, 4, 5, 6	13	Yes
ThinkSystem RAID 930-8i 2GB Flash PCIe 12Gb Adapter	3	9, 1, 2, 3, 4, 5, 6	11	Yes
ThinkSystem RAID 930-16i 4GB Flash PCIe 12Gb Adapter	1	1, 2, 3, 4, 5, 6	12	Yes
ThinkSystem RAID 930-16i 8GB Flash PCIe 12Gb Adapter	1	1, 2, 3, 4, 5, 6	12	Yes
ThinkSystem RAID 930-24i 4GB Flash PCIe 12Gb Adapter	1	1, 2, 3, 4, 5	10	Yes
ThinkSystem RAID 930-8e 4GB Flash PCIe 12Gb Adapter	4	1, 2, 4, 5, 7	19	Yes
ThinkSystem RAID 940-8i 4GB Flash PCIe Gen4 12Gb Adapter	3	9, 1, 2, 3, 4, 5, 6	11	Yes
ThinkSystem RAID 940-16i 4GB Flash PCIe 12Gb Adapter	1	1, 2, 3, 4, 5, 6	12	Yes

HBA/RAID adapters	Maximum supported	Slot selection priority	Suggested priority (between adapters)	Super capacitor
ThinkSystem RAID 940-32i 8GB Flash PCIe Gen4 12Gb Adapter	1	1, 2, 3, 4, 5	10	Yes
ThinkSystem RAID 940-8e 4GB Flash PCIe Gen4 12Gb Adapter	4	1, 2, 4, 5, 7	19	Yes
ThinkSystem 810-4P NVMe Switch Adapter	4	1, 4, 5, 6	4	No
ThinkSystem 1610-4P NVMe Switch Adapter	3	1, 4, 5	3	No
ThinkSystem 1611-8P PCIe Gen4 Switch Adapter	2	1, 5	3	No

Notes:

- If you plan to use the RAID 530-8i adapter in the server, it must have firmware 50.3.0-1032 or later applied before it can be used in the server. If the adapter you plan to use has older firmware, it must first be upgraded by installing it in a supported server and upgrading the firmware there. For more information, see https://datacentersupport.lenovo.com/us/zh/solutions/ht509177.
- The RAID 530-8i adapter cannot be mixed with the RAID 730-8i 1G adapter.
- The RAID 540-8i adapter can be mixed with other x40 series RAID/HBA adapters.
- The RAID 730-8i-1G adapter is not available for North America.
- The RAID 730-8i 2G adapter cannot be mixed with the RAID 730-8i 1G adapter or RAID 930-8i adapter.
- If the rear 3.5-inch drive cage is installed, the RAID 930-24i adapter can only be installed in slot 3. If the rear 2.5-inch drive cage is installed, the RAID 930-24i adapter can only be installed in slot 1 or 2.
- The RAID 940 adapters can be mixed with the 440-8i or 440-16i HBA adapters.
- The RAID 940/440 adapters cannot be mixed with the RAID 930/730/530/430 adapters.
- Oversubscription may exist in some configurations with NVMe switch adapters. For details, see: https://lenovopress.lenovo.com/lp1161-thinksystem-sr655-server#internal-storage.
- When there are more than 16 NVMe SSDs, switch adapters must be selected.
- External RAID adapters are not supported in slots 3, 6 or 8.
- If a RAID 730-8i 1 GB/2 GB adapter is installed, ThinkSystem 2.5"/ 3.5" PM1653 Read Intensive SAS 24 Gb SSDs and ThinkSystem 2.5" PM1655 Mixed Use SAS 24 Gb SSDs cannot be installed.

Technical rules for GPU adapters

The server supports the following graphics processing units (GPUs).

Table 11. Supported GPUs

GPU	Slots priority	Maximum supported	Suggested priority (between adapters)
ThinkSystem NVIDIA Tesla V100 16GB PCIe Passive GPU	1, 7 (double-wide)	2	2
ThinkSystem NVIDIA Tesla V100 32GB PCIe Passive GPU	1, 7 (double-wide)	2	2
ThinkSystem NVIDIA Tesla V100S 32GB PCIe Passive GPU	1, 7 (double-wide)	2	2
ThinkSystem NVIDIA A100 40GB PCIe Gen4 Passive GPU	1, 7 (double-wide)	2	2
ThinkSystem NVIDIA A100 80GB PCIe Gen4 Passive GPU	1, 7 (double-wide)	2	2
ThinkSystem NVIDIA A30 24GB PCIe Gen4 Passive GPU	1, 7 (double-wide)	2	2
ThinkSystem AMD Instinct MI210 PCIe Gen4 Passive Accelerator **Note:** MI210 only supports 7003 series processors	1, 7 (double-wide)	2	2
ThinkSystem NVIDIA A40 48GB PCIe Gen4 Passive GPU	1, 7 (double-wide)	2	2
ThinkSystem NVIDIA Quadro RTX A4500 20GB PCIe Active GPU	1, 7 (double-wide)	2	2
ThinkSystem NVIDIA Quadro RTX A6000 48GB PCIe Active GPU	1, 7 (double-wide)	2	2
ThinkSystem NVIDIA Tesla T4 16GB PCIe Passive GPU	1, 2, 4, 5, 7, 8 (single-wide)	6	17, 1
ThinkSystem NVIDIA A2 16GB Gen4 Passive GPU	1, 2, 4, 5, 7, 8 (single-wide)	6	17, 1
ThinkSystem NVIDIA Quardo P620 2GB PCIe Active GPU	1, 2, 4, 5, 7, 8 (single-wide)	6	2
ThinkSystem NVIDIA Quadro RTX A2000 12GB PCIe Active GPU	1, 7 (single-wide)	2	2

Note: Lenovo recommends that if you plan to install Windows 10/11 on this server to run graphics-intensive applications, then you also need to install a dedicated graphics adapter (GPU).

GPU adapters are supported when all of the following conditions are met:

- No middle drive cage, rear drive cage, or PCIe Flash storage adapter is installed.
- Riser cards with PCIe x16 slots are available.

  Note: This requirement is specified for server configured with V100, V100S, A100, A30, A40, MI210, A4500, A6000 adapters, or 6 x T4/A2 adapters.
- The 1U heat sink is installed.

  Notes:

  – This requirement is specified for server configured with V100, V100S, A100, A30, A40, MI210, A4500, A6000 adapter, or 6 x T4/A2 adapters.

  – Can be performance heat sink or standard heat sink depending on processor TDP. For details, see "Technical rules for processor and heat sink" on page 142.
- The high performance system fans (speed of 29000 RPM) are installed.
- The 1100-watt or 1600-watt power supplies are installed. 1600-watt power supplies must be used if two or more double-wide GPU adapters are installed.
- All GPU adapters to be installed must be identical.
- All empty memory slots must be covered with a memory module filler or new memory module to ensure optimal air flow.
- Supported server models, processor TDP, and ambient temperature:

Table 12. Processor and thermal requirements for GPUs

Server model (front drive bays)	Maximum GPUs	Maximum processor TDP	Maximum ambient temperature
8 x 3.5-inch SAS/SATA 8 x 2.5-inch SAS/SATA 16 x 2.5-inch SAS/SATA	2 x V100/V100S/A100/A30/A40/MI210/A2000/A4500/A6000 GPUs	280 watts	30°C (86°F)
8 x 3.5-inch SAS/SATA	6 x T4/A2 GPUs	200 watts	35°C (95°F)
8 x 3.5-inch SAS/SATA	6 x T4/A2 GPUs	280 watts	30°C (86°F)
8 x 2.5-inch SAS/SATA 16 x 2.5-inch SAS/SATA	6 x T4/A2 GPUs	280 watts	35°C (95°F)
8 x 3.5-inch SAS/SATA 12 x 3.5-inch SAS/SATA 8 x 2.5-inch SAS/SATA 16 x 2.5-inch SAS/SATA 24 x 2.5-inch SAS/SATA	6 x P620 GPUs	240 watts	35°C (95°F)

The following table shows the riser cards for double-wide GPUs. In such a configuration, slots 1, 7 are x16 used by the GPUs, and slots 2, 4, 5, 8 are inaccessible. The remaining slots 3 and 6 are available for x8 adapters.

Notes: To install an A100 double-wide GPU in slot 7, the following riser cage is required:

- x16/x16 Riser 3 cage (FRU PN: 03GX032)

Table 13. Riser cards for double-wide GPUs

Riser 1: x16, x8, x8	ThinkSystem SR655 x16/x8/x8 PCIe Gen4 Riser1
Riser 3: x16, x16	ThinkSystem SR655 x16/x16 PCIe Gen4 Riser3

The following table shows the riser cards for single-wide GPUs. With six GPUs installed, slots 1, 2, 4, 5, 7, and 8 are used by the GPUs.

Table 14. Riser cards for single-wide GPUs

Riser 1: x16, x16, NA	ThinkSystem SR655 x16/x16 PCIe Gen4 Riser1
Riser 2: x16, x16, NA	ThinkSystem SR655 x16/x16 PCIe Gen4 Riser2
Riser 3: x16, x16	ThinkSystem SR655 x16/x16 PCIe Gen4 Riser3

Technical rules for OCP adapters

The server supports one OCP Ethernet adapter to provide two or four Ethernet connectors. The OCP Ethernet adapter is installed in OCP 3.0 slot.

The supported OCP Ethernet adapters depend on the server model and system fans installed, see the following table:

Supported OCP Ethernet adapters	Server model	System fans (standard fans or performance fans)
• ThinkSystem Broadcom 5719 1GbE RJ45 4-port OCP Ethernet Adapter • ThinkSystem Intel I350 1GbE RJ45 4-port OCP Ethernet Adapter • ThinkSystem Intel I350 1GbE RJ45 4-port OCP Ethernet Adapter v2 • ThinkSystem Intel E810-DA2 10/25GbE SFP28 2-port OCP Ethernet Adapter • ThinkSystem Intel X710-T4L 10GBase-T 4-Port OCP Ethernet Adapter	All server models	standard fans or performance fans
ThinkSystem Intel E810-DA4 10/25GbE SFP28 4-port OCP Ethernet Adapter	All server models except 12x3.5 front drive bays and 24x2.5 front drive bays	performance fans

Supported OCP Ethernet adapters	Server model	System fans (standard fans or performance fans)
• ThinkSystem Broadcom 57414 10/25GbE SFP28 2-port OCP Ethernet Adapter • ThinkSystem Mellanox ConnectX-4 Lx 10/25GbE SFP28 2-port OCP Ethernet Adapter • ThinkSystem Marvell QL41232 10/25GbE SFP28 2-Port OCP Ethernet Adapter • ThinkSystem Marvell QL41132 10GBASE-T 2-port OCP Ethernet Adapter • ThinkSystem Intel X710-T2L 10GBASE-T 2-port OCP Ethernet Adapter	All server models	performance fans
	• 8 x 3.5-inch SAS/SATA front drive bays • 8 x 2.5-inch SAS/SATA front drive bays • 8 x 2.5 NVMe front drive bays • 16 x 2.5-inch SAS/SATA front drive bays • 16 x 2.5 NVMe front drive bays • 8 x 2.5-inch SAS/SATA+8 NVMe front drive bays	standard fans
• ThinkSystem Mellanox ConnectX-6 Lx 10/25GbE SFP28 2-port OCP Ethernet Adapter • ThinkSystem Broadcom 57416 10GBASE-T 2-port OCP Ethernet Adapter • ThinkSystem Broadcom 57454 10/25GbE SFP28 4-port OCP Ethernet Adapter • ThinkSystem Broadcom 57454 10GBASE-T 4-port OCP Ethernet Adapter • ThinkSystem Broadcom 57416 10GBASE-T 2-port + 5720 1GbE 2-port OCP Ethernet Adapter	All server models except 12 x 3.5-inch SAS/SATA front drive bays and 8 x 3.5-inch SAS/SATA + 4 Anybay front drive bays	performance fans
	• 8 x 3.5-inch SAS/SATA front drive bays • 8 x 2.5-inch SAS/SATA front drive bays • 8 x 2.5 NVMe front drive bays • 16 x 2.5-inch SAS/SATA front drive bays • 16 x 2.5 NVMe front drive bays • 8 x 2.5-inch SAS/SATA+8 NVMe front drive bays	standard fans

If the server is installed with 280-watt processor, refer to "Rules about 280-watt processor selection" on page 142 for the OCP Ethernet Adapter limitations.

Technical rules for Ethernet adapters

The following table lists the supported Ethernet adapters and the recommended physical slot sequence.

Table 15.

Supported Ethernet adapter	Max. qty.	Slot priority
• ThinkSystem Broadcom NetXtreme PCIe 1Gb 2-Port RJ45 Ethernet Adapter • ThinkSystem Broadcom NetXtreme PCIe 1Gb 4-Port RJ45 Ethernet Adapter • ThinkSystem Intel I350-T4 PCIe 1Gb 4-Port RJ45 Ethernet Adapter • ThinkSystem Intel I350-T2 PCIe 1Gb 2-Port RJ45 Ethernet Adapter • ThinkSystem Intel I350-F1 PCIe 1Gb 1-Port SFP Ethernet Adapter	8	PCIe slot 1, 2, 4, 5, 7, 8, 6, 3
• ThinkSystem Broadcom 57414 10/25GbE SFP28 2-port PCIe Ethernet Adapter • ThinkSystem Marvell QL41232 10/25GbE SFP28 2-Port PCIe Ethernet Adapter • ThinkSystem Mellanox ConnectX-4 Lx 10/25GbE SFP28 2-port PCIe Ethernet Adapter • Intel X550-T2 PCIe 10GbE Base-T Adapter • ThinkSystem Intel X710-DA2 PCIe 10Gb 2-Port SFP+ Ethernet Adapter • ThinkSystem Intel E810-DA2 10/25GbE SFP28 2-Port PCIe Ethernet Adapter • ThinkSystem Broadcom NX-E PCIe 10Gb 2-Port Base-T Ethernet Adapter • 4-Port 10G Base T PCIe Adapter (Ethernet) - La Paz • ThinkSystem AMD X3522 10/25GbE DSFP28 2-port PCIe Ethernet Adapter (Low Latency)	7	PCIe slot 1, 2, 4, 5, 7, 8, 6
• ThinkSystem Broadcom 57454 10GBASE-T 4-port PCIe Ethernet Adapter • ThinkSystem Broadcom 57454 10/25GbE SFP28 4-port PCIe Ethernet Adapter_Refresh • ThinkSystem Mellanox ConnectX-6 Dx 50GbE SFP56 2-port PCIe Ethernet Adapter • ThinkSystem Mellanox ConnectX-6 Lx 10/25GbE SFP28 2-port PCIe Ethernet Adapter • ThinkSystem Intel X710-T4L 10GBASE-T 4-Port PCIe Ethernet Adapter • ThinkSystem Intel X710-T2L 10GBASE-T 2-port PCIe Ethernet Adapter	6	PCIe slot 1, 2, 4, 5, 7, 8
• ThinkSystem Mellanox ConnectX-6 Dx 100GbE QSFP56 2-port PCIe Ethernet Adapter • ThinkSystem Intel E810-DA4 10/25GbE SFP28 4-port PCIe Ethernet Adapter	4	PCIe slot 4, 5, 7, 8
ThinkSystem Broadcom 57508 100GbE QSFP56 2-port PCIe 4 Ethernet Adapter	3	PCIe slot 1, 4, 5

Note: Intel E810-DA4 PCIe adapter does not support 12x3.5 and 24x2.5 configurations.

Technical rules for PCIe Flash storage adapters

The server supports the following PCIe Flash storage adapters:

PCIe Flash storage adapter	Slots supported	Maximum supported	Suggested priority (between adapters)
ThinkSystem HHHL Kioxia CM5-V 1.6TB Mainstream NVMe PCIe3.0 x4 Flash Adapter	1–8	6	18
ThinkSystem HHHL Kioxia CM5-V 3.2TB Mainstream NVMe PCIe3.0 x4 Flash Adapter	1–8	6	18
ThinkSystem HHHL Kioxia CM5-V 6.4TB Mainstream NVMe PCIe3.0 x4 Flash Adapter	1–8	6	18

The PCIe Flash storage adapters are supported at the following conditions:

- The processor TDP is less than or equal to 155 watts.
- The ambient temperature is less than or equal to 35°C (95°F).
- High performance system fans (speed of 29000 RPM) are installed.
- No GPU adapter is installed.

Install server hardware options

This section includes instructions for performing initial installation of optional hardware. Each component installation procedure references any tasks that need to be performed to gain access to the component being replaced.

Installation procedures are presented in the optimum sequence to minimize work.

Attention: To ensure the components you install work correctly without problems, read the following precautions carefully.

- Make sure the components you are installing are supported by the server. For a list of supported optional components for the server, see https://serverproven.lenovo.com/.
- Always download and apply the latest firmware. This will help ensure that any known issues are addressed, and that your server is ready to work with optimal performance. Go to ThinkSystem SR655 Drivers and Software to download firmware updates for your server.
- It is good practice to make sure that the server is working correctly before you install an optional component.
- Follow the installation procedures in this section and use appropriate tools. Incorrectly installed components can cause system failure from damaged pins, damaged connectors, loose cabling, or loose components.

Remove the security bezel

Use this information to remove the security bezel.

"**Read** the installation Guidelines" on page 134

To remove the security bezel, complete the following steps:

Step 1. Use the key to unlock the security bezel.

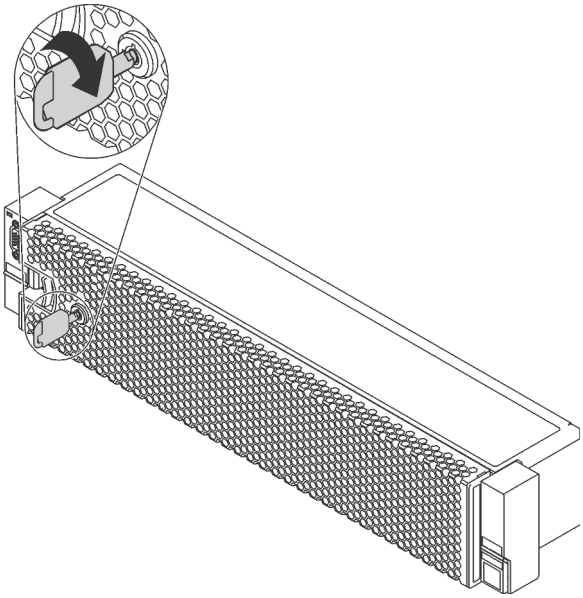

Figure 105. Unlocking the security bezel

Step 2. Press the release latch **1** and pivot the security bezel outward to remove it from the chassis.

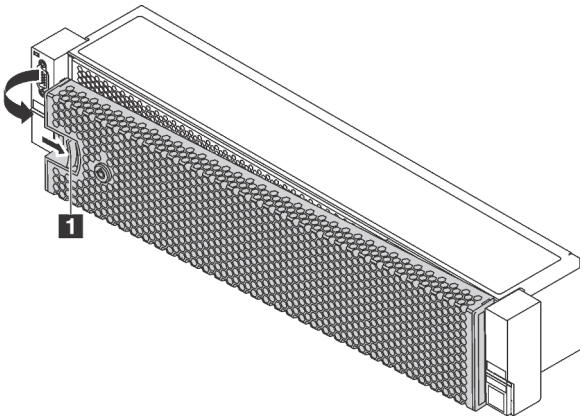

Figure 106. Security bezel removal

Attention: Before you ship the rack with the server installed, reinstall and lock the security bezel into place.

Demo video

Watch the procedure on YouTube

Remove the top cover

Use this information to remove the top cover.

	"**Read** the installation Guidelines" on page 134	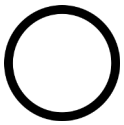 "**Power off** the server for this task" on page 209	 "**ATTENTION: Static Sensitive Device** Ground package before opening" on page 136

S033

CAUTION:
Hazardous energy present. Voltages with hazardous energy might cause heating when shorted with metal, which might result in spattered metal, burns, or both.

S014

CAUTION:
Hazardous voltage, current, and energy levels might be present. Only a qualified service technician is authorized to remove the covers where the label is attached.

S033

CAUTION:
Hazardous energy present. Voltages with hazardous energy might cause heating when shorted with metal, which might result in spattered metal, burns, or both.

S014

CAUTION:
Hazardous voltage, current, and energy levels might be present. Only a qualified service technician is authorized to remove the covers where the label is attached.

To remove the top cover, complete the following steps:

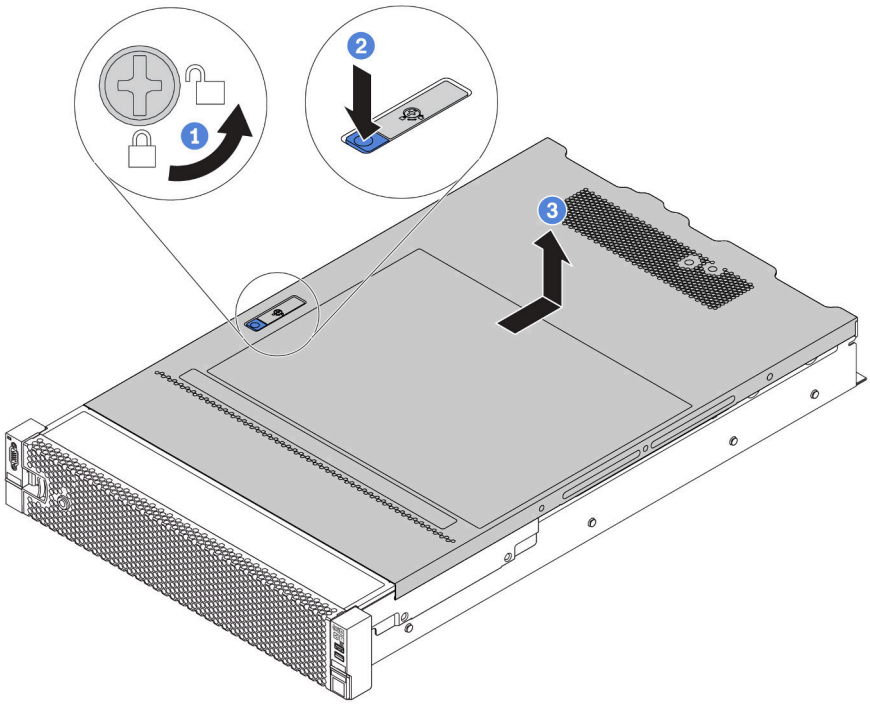

Figure 107. Top cover removal

Step 1. Use a screwdriver to turn the cover lock to the unlocked position as shown.

Step 2. Press the release button on the cover latch and then fully open the cover latch.

Step 3. Slide the top cover to the rear until it is disengaged from the chassis. Then, lift the top cover off the chassis and place the top cover on a flat clean surface.

Attention:

- Handle the top cover carefully. Dropping the top cover with the cover latch open might damage the cover latch.
- For proper cooling and airflow, install the top cover before you turn on the server. Operating the server with the top cover removed might damage server components.

Demo video

Watch the procedure on YouTube

Remove the air baffle

If you intend to install hardware options in the server, you must first remove the air baffle from the server.

"**Read** the installation Guidelines" on page 134

"**Power off** the server for this task" on page 209

S033

CAUTION:
Hazardous energy present. Voltages with hazardous energy might cause heating when shorted with metal, which might result in spattered metal, burns, or both.

S017

CAUTION:
Hazardous moving fan blades nearby.

Before removing the air baffle:

1. If there is a RAID super capacitor module installed on the air baffle, disconnect the RAID super capacitor module cable first.
2. If there is a GPU installed on the air baffle, remove the GPU first.

To remove the air baffle, complete the following step:

Step 1. Grasp the air baffle and carefully lift it out of the server.

Note: The illustration shows removing the standard air baffle. The procedure is the same for removing the other air baffles.

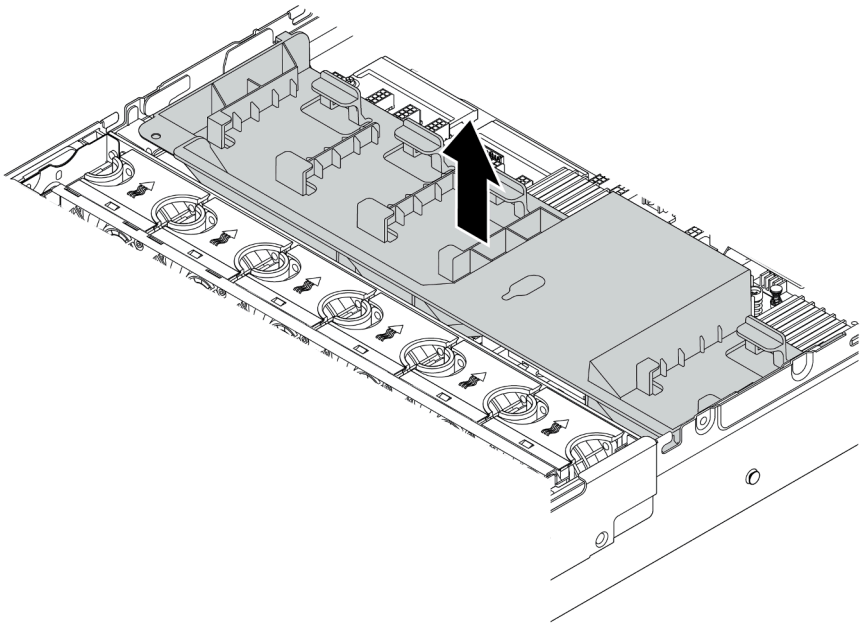

Figure 108. Removal of the standard air baffle

Attention: For proper cooling and airflow, install the air baffle before you turn on the server. Operating the server without the air baffle might damage server components.

Demo video

Watch the procedure on YouTube

Remove the system fan cage

The system fan cage might impede your access to some connectors. You must remove the system fan cage before you route cables.

	"**Read** the installation Guidelines" on page 134	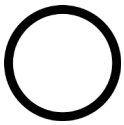 "**Power off** the server for this task" on page 209	 "**ATTENTION: Static Sensitive Device** Ground package before opening" on page 136

To remove the system fan cage, complete the following steps:

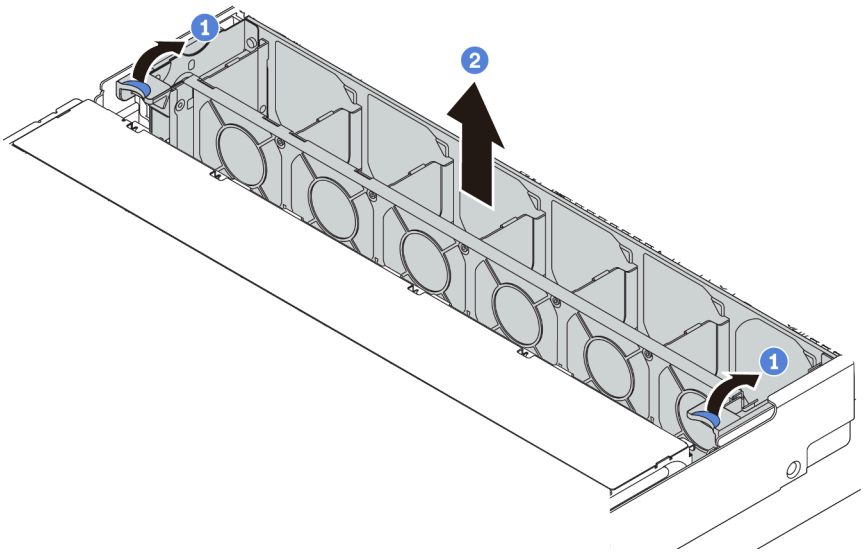

Figure 109. System fan cage removal

Step 1. Rotate the levers of the system fan cage to the rear of the server.

Step 2. Lift the system fan cage straight up and out of the chassis.

After removing the system fan cage, begin installing any options that you have purchased.

Demo video

Watch the procedure on YouTube

Replace a heat sink

This task has instructions for replacing a heat sink. Heat sink replacement requires a Torx #T20 screwdriver.

	"**Read** the installation Guidelines" on page 134	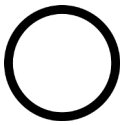 "**Power off** the server for this task" on page 209	 "**ATTENTION: Static Sensitive Device** Ground package before opening" on page 136

Before installing some options, such as middle drive cage or GPU adapter, you might need to replace the heat sink with the required heat sink. For detailed information on heat sink selection, see "Technical rules for processor and heat sink" on page 142.

CAUTION:
Make sure that all server power cords are disconnected from their power sources before performing this procedure.

Attention:

- The heat sink is necessary to maintain proper thermal conditions for the processor. Do not power on the server with the heat sink removed.
- Do not touch the processor socket or processor contacts. Processor-socket contacts are very fragile and easily damaged. Contaminants on the processor contacts, such as oil from your skin, can cause connection failures.

- Do not allow the thermal grease on the processor or heat sink to come in contact with anything. Contact with any surface can compromise the thermal grease, rendering it ineffective. Thermal grease can damage components, such as electrical connectors in the processor socket. Do not remove the grease cover from a heat sink until you are instructed to do so.

To replace the heat sink, complete the following steps:

Watch the procedure. A video of the installation and removal process is available at YouTube: https://www.youtube.com/playlist?list=PLYV5R7hVcs-BYjgwMTzXbgbC6fhKRsCdR.

Step 1. Remove the installed heat sink.

a. Use a Torx #T20 screwdriver to loosen all the captive screws in the *removal sequence* shown on the heat-sink label.

b. After loosening each captive screw, wait for about several seconds for the heat sink to loosen from the processor. Then, carefully lift the heat sink up.

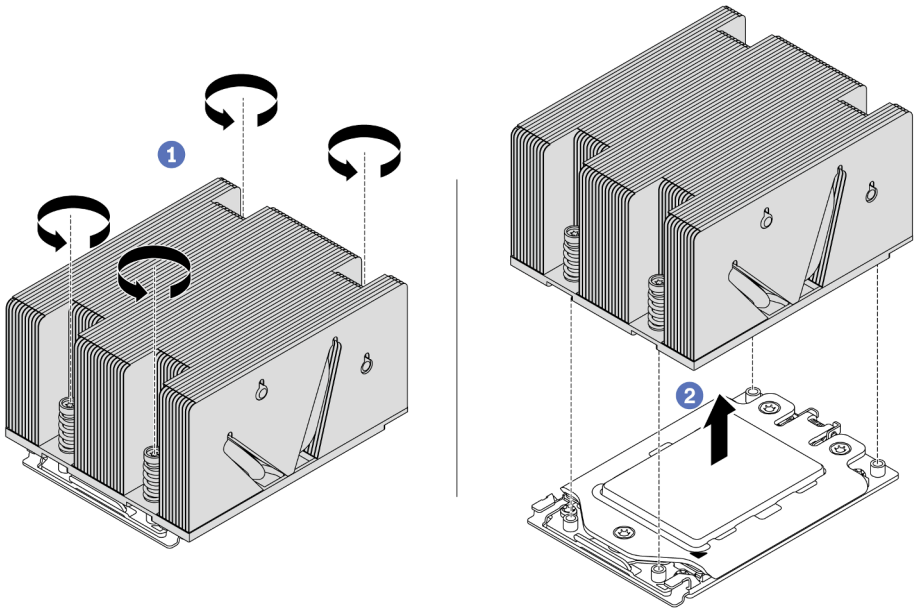

Figure 110. Removing a heat sink

Step 2. Install the new heat sink.

a. Orient the heat sink with the screw holes on the processor plate. The captive screws on the heat sink should align with the screw holes on the processor plate.

b. Tighten all the captive screws in the *installation sequence* shown on the heat-sink label.

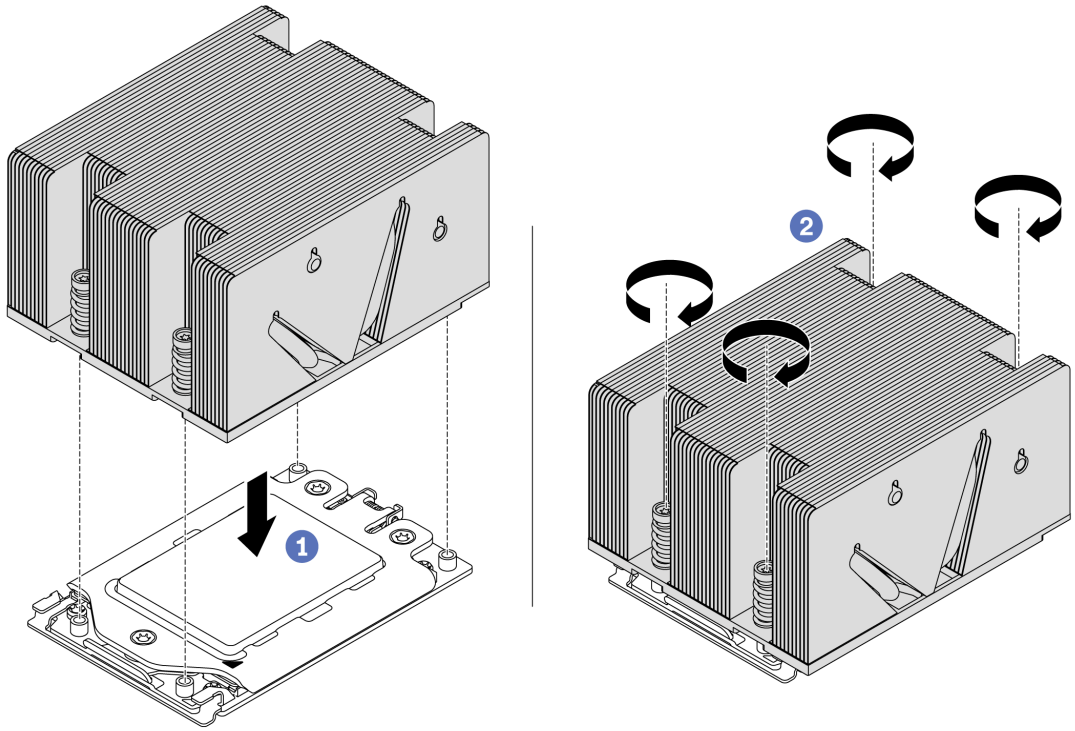

Figure 111. Installing a heat sink

After installing a heat sink,

1. If there are memory modules to install, install them. See "Install a memory module" on page 159.
2. Install other options you want to install.

Demo video

Watch the procedure on YouTube

Install a memory module

Use this information to install a memory module.

	"**Read** the installation Guidelines" on page 134	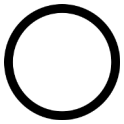 "**Power off** the server for this task" on page 209	 "**ATTENTION: Static Sensitive Device** Ground package before opening" on page 136

Attention:

- Disconnect all power cords for this task.

- Memory modules are sensitive to static discharge and require special handling. In addition to the standard guidelines for "Handling static-sensitive devices" on page 136:
  - Always wear an electrostatic-discharge strap when removing or installing memory modules. Electrostatic-discharge gloves can also be used.
  - Never hold two or more memory modules together so that they do not touch each other. Do not stack memory modules directly on top of each other during storage.
  - Never touch the gold memory module connector contacts or allow these contacts to touch the outside of the memory module connector housing.
  - Handle memory modules with care: never bend, twist, or drop a memory module.
  - Do not use any metal tools (such as jigs or clamps) to handle the memory modules, because the rigid metals may damage the memory modules.
  - Do not insert memory modules while holding packages or passive components, which can cause package cracks or detachment of passive components by the high insertion force.

Before installing a memory module:

1. Touch the static-protective package that contains the new memory module to any unpainted surface on the outside of the server. Then, take the new memory module out of the package and place it on a static-protective surface.
2. Locate the required memory module slot on the system board. See "Memory module installation rules" on page 137. Ensure that you observe the installation rules and sequence.

To install a memory module, complete the following steps:

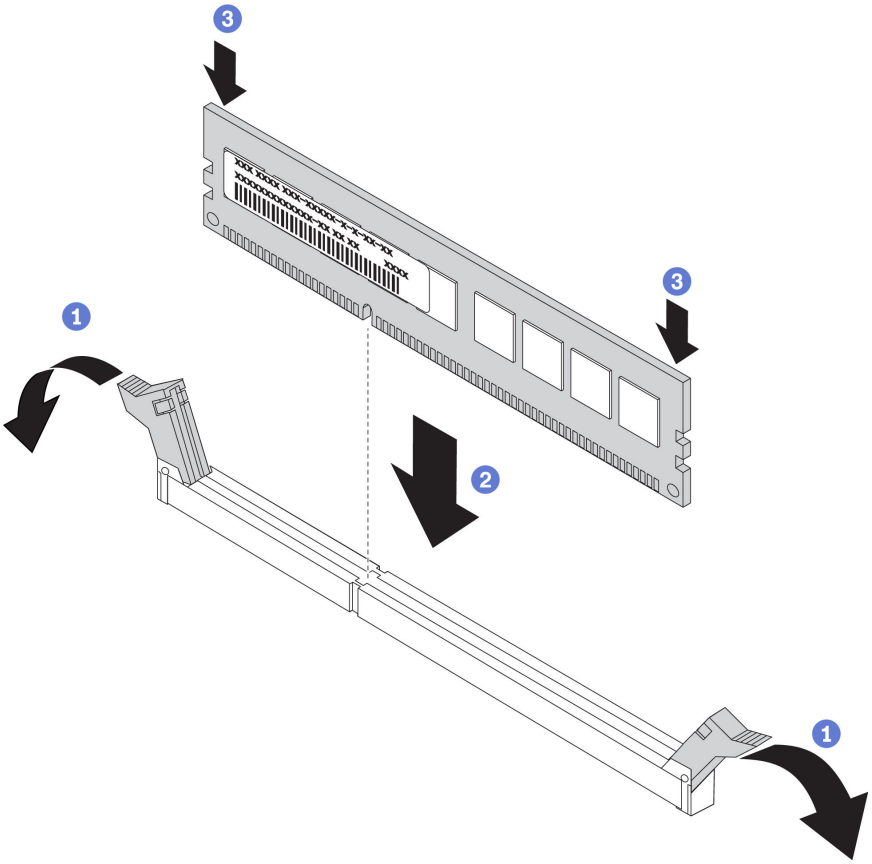

Figure 112. Memory module installation

Step 1. Open the retaining clips on each end of the memory module slot.

Attention: To avoid breaking the retaining clips or damaging the memory module slots, open and close the clips gently.

Step 2. Align the memory module with the slot, and gently place the memory module on the slot with both hands.

Step 3. Firmly press both ends of the memory module straight down into the slot until the retaining clips snap into the locked position.

Note: If there is a gap between the memory module and the retaining clips, the memory module has not been correctly inserted. Open the retaining clips, remove the memory module, and then reinsert it.

Demo video

Watch the procedure on YouTube

Install a RAID super capacitor module

Use this information to install a RAID super capacitor module.

The RAID super capacitor module protects the cache memory on the installed RAID adapter. You can purchase a RAID super capacitor module from Lenovo. For a list of supported options, see: https://serverproven.lenovo.com/

The quantity of supported RAID super capacitor modules depends on the hardware configurations.

Location	Quantity
Standard air baffle 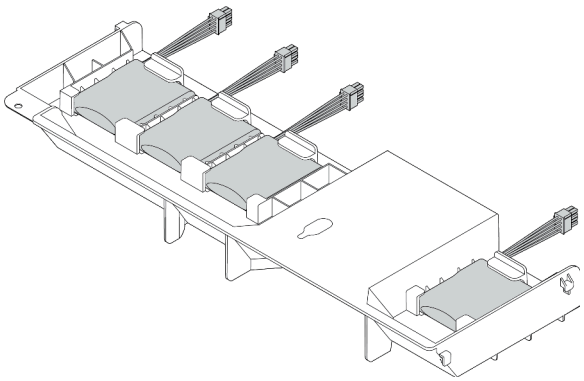	Up to four RAID super capacitor modules
Air baffle for GPU 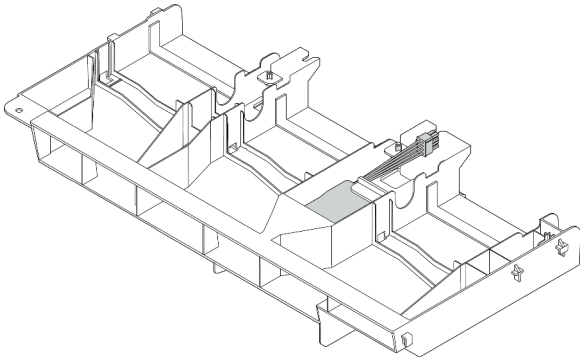	Up to one RAID super capacitor module
Middle 2.5-inch drive cage 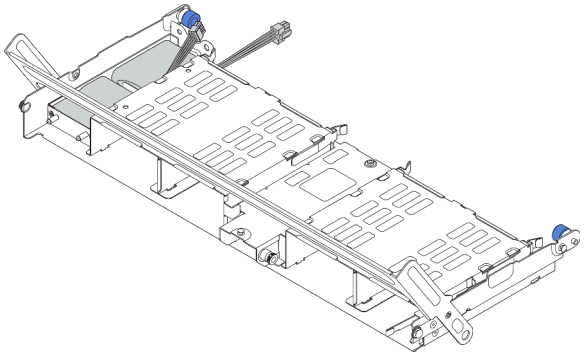	Up to two RAID super capacitor modules
Internal riser kit 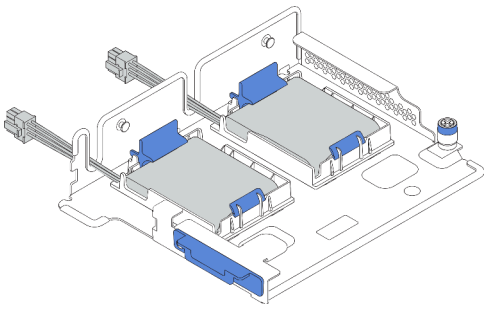	Up to two RAID super capacitor modules

Depending on your hardware configuration, refer to the specific topic for the installation procedure.

- "Install a super capacitor module on the internal riser kit" on page 163
- "Install a super capacitor module on the air baffle" on page 164
- "Install a super capacitor module on the middle 2.5-inch drive cage" on page 165

Install a super capacitor module on the internal riser kit

Use this information to install a super capacitor module on the internal riser kit.

"**Read** the installation Guidelines" on page 134	"**Power off** the server for this task" on page 209	"**ATTENTION: Static Sensitive Device** Ground package before opening" on page 136

Before installing the RAID super capacitor module on the internal riser kit, touch the static-protective package that contains the new RAID super capacitor module to any unpainted surface on the outside of the server. Then, take the new RAID super capacitor module out of the package and place it on a static-protective surface.

To install a super capacitor module, complete the following steps:

Step 1. Install the M.2/riser support bracket.

a. Align the notches on the M.2/riser support bracket with the pins on the chassis, and put the support bracket in place as shown.

b. Fasten the screw.

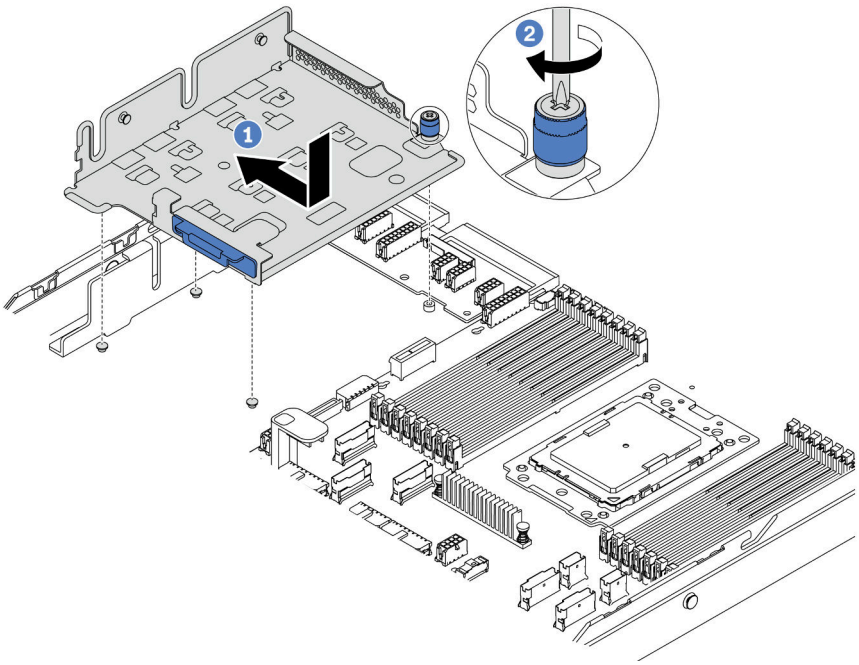

Figure 113. Support bracket installation

Step 2. Install two super capacitor holders.

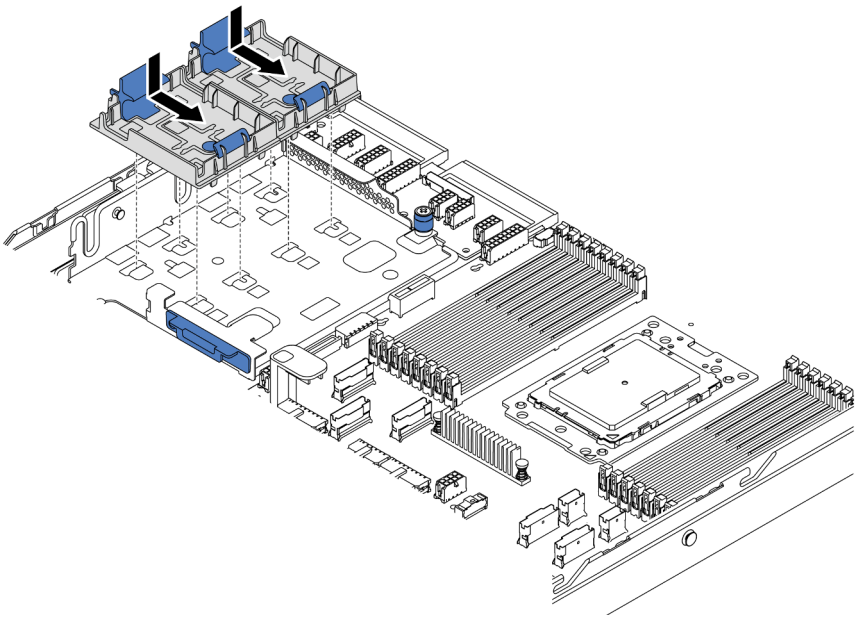

Figure 114. Super capacitor holder installation

Step 3. Install the super capacitor module.

a. Open the retention clip on the super capacitor holder.

b. Put a super capacitor module into the holder.

c. Press super capacitor module down to secure it into the holder.

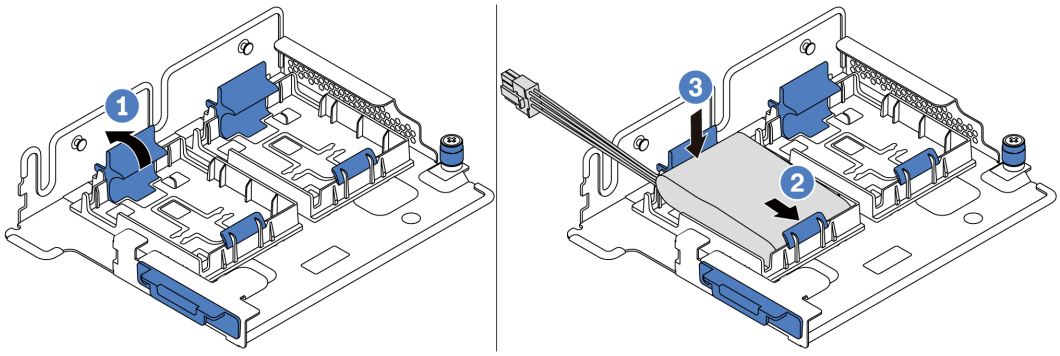

Figure 115. Super capacitor module installation

Step 4. Connect the super capacitor module to an adapter with the extension cable that comes with the super capacitor module. See "RAID super capacitor modules" on page 41.

Demo video

Watch the procedure on YouTube

Install a super capacitor module on the air baffle

Use this information to install a super capacitor module on the air baffle (standard air baffle or air baffle for GPU).

"**Read** the installation Guidelines" on page 134	"**Power off** the server for this task" on page 209	"**ATTENTION: Static Sensitive Device** Ground package before opening" on page 136

Before installing the RAID super capacitor module, touch the static-protective package that contains the new RAID super capacitor module to any unpainted surface on the outside of the server. Then, take the new RAID super capacitor module out of the package and place it on a static-protective surface.

To install a super capacitor module, complete the following steps:

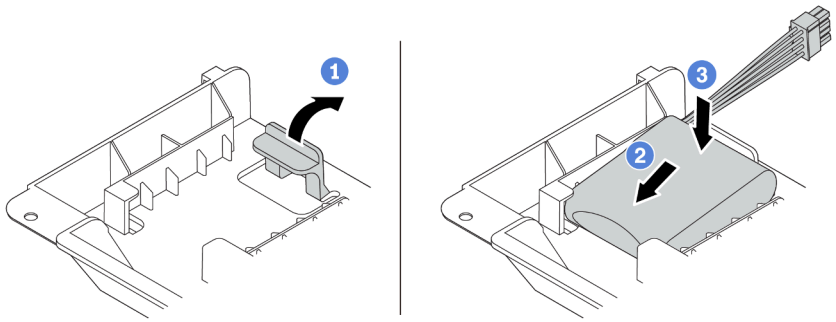

Figure 116. Super capacitor installation on the air baffle

Step 1. Open the retention clip on a holder.

Step 2. Put a super capacitor module into the holder.

Step 3. Press it down to secure it into the holder.

Step 4. Connect the super capacitor module to an adapter with the extension cable that comes with the super capacitor module. See "RAID super capacitor modules" on page 41.

Demo video

Watch the procedure on YouTube

Install a super capacitor module on the middle 2.5-inch drive cage

Use this information to install a super capacitor module the middle 2.5-inch drive cage.

"**Read** the installation Guidelines" on page 134	"**Power off** the server for this task" on page 209	"**ATTENTION: Static Sensitive Device** Ground package before opening" on page 136

Before installing the RAID super capacitor module:

1. Touch the static-protective package that contains the new RAID super capacitor module to any unpainted surface on the outside of the server. Then, take the new RAID super capacitor module out of the package and place it on a static-protective surface.

2. Open the drive cage handle.

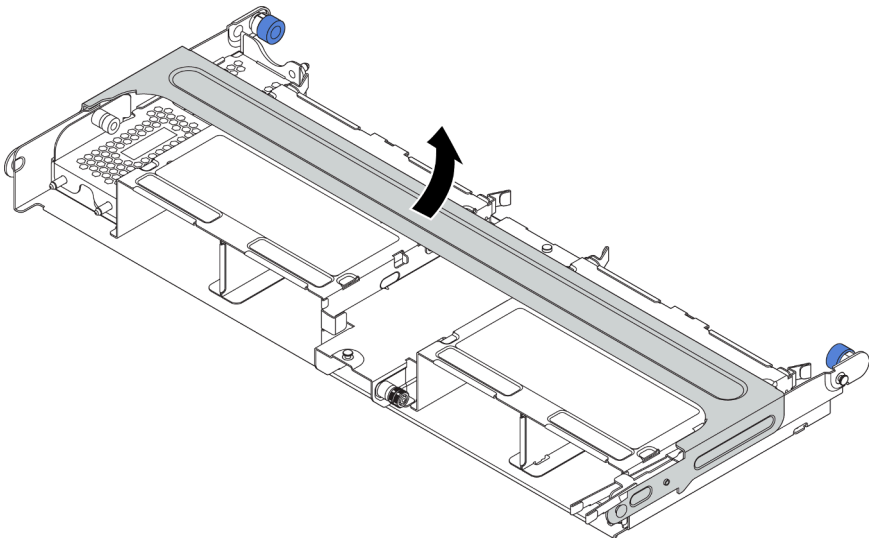

3. Remove the metal cover.
   a. Pull out the blue plunger.
   b. Slide the metal cover out of the drive cage.

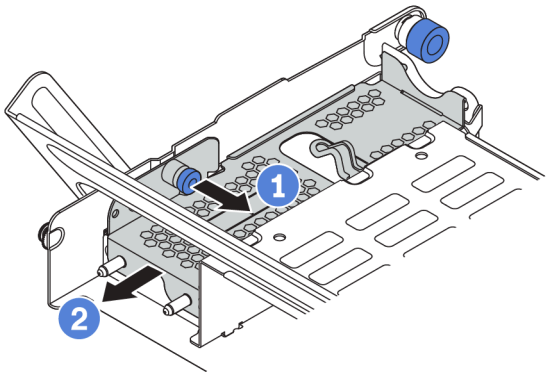

To install a super capacitor module, complete the following steps:

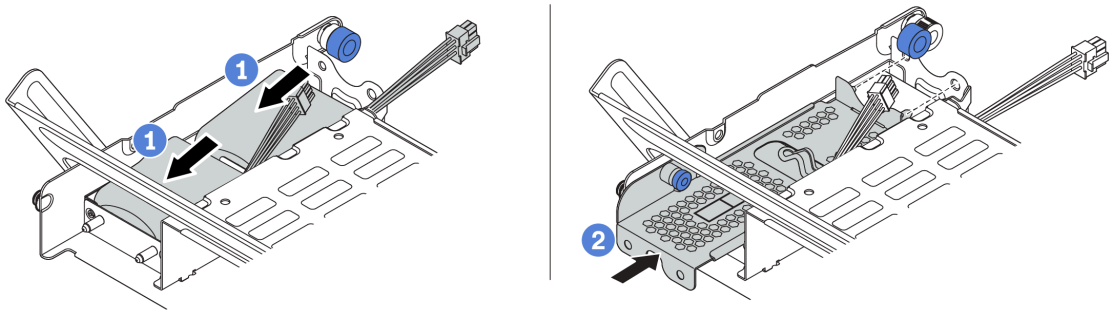

Figure 117. Super capacitor installation the middle 2.5-inch drive cage

Step 1. Put a super capacitor module into the holder, and press it down to secure it into the holder.

Step 2. Align the pins on the super capacitor cover with the holes in the super capacitor holder, pull out the blue latch on the cover, and slide the cover into the holder until the pins pass through the holes. Then, release the blue latch to lock the cover into place.

Step 3. Connect the super capacitor module to an adapter with the extension cable that comes with the super capacitor module. See "RAID super capacitor modules" on page 41.

Demo video

Watch the procedure on YouTube

Install the internal riser assembly

Use this information to install the internal riser assembly.

"**Read** the installation Guidelines" on page 134	"**Power off** the server for this task" on page 209	"**ATTENTION: Static Sensitive Device** Ground package before opening" on page 136

To install the internal riser kit, complete the following steps:

Watch the procedure. A video of the installation and removal process is available at YouTube: https://www.youtube.com/playlist?list=PLYV5R7hVcs-BYjgwMTzXbgbC6fhKRsCdR.

Step 1. Install the M.2/riser support bracket and super capacitor modules on it. See "Install a super capacitor module on the internal riser kit" on page 163.

Step 2. Install a PCIe adapter on the riser card.

a. Open the blue latch on the riser bracket.

b. Slide the PCIe adapter into the PCIe slot on the riser card.

c. Close the blue latch to secure the PCIe adapter.

Note: The internal riser card supports only a RAID/HBA 8i adapter, not supporting a RAID/HBA 16i or 24i adapter.

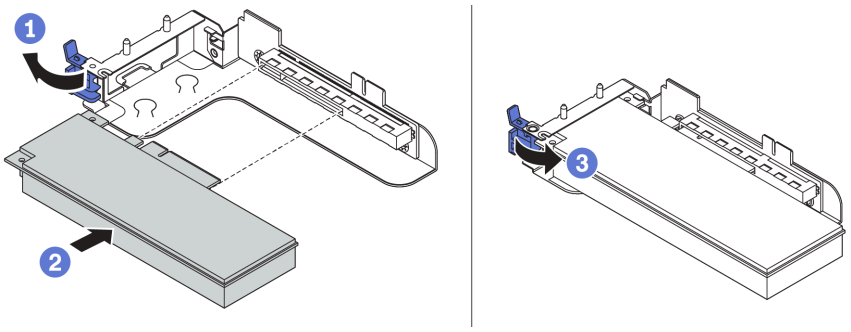

Figure 118. PCIe adapter installation

Step 3. Install the riser assembly into the chassis.

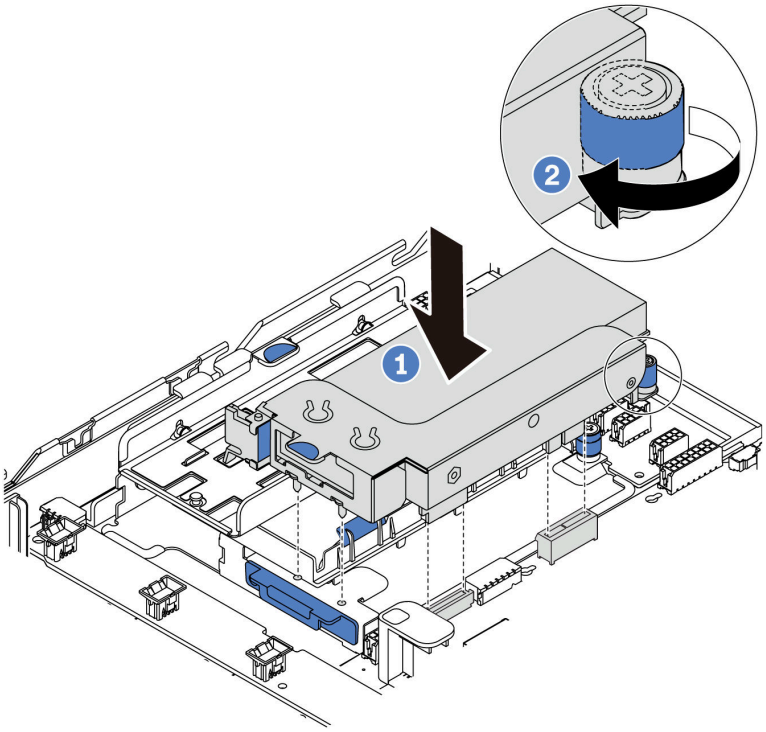

Figure 119. Internal riser assembly installation

Demo video

Watch the procedure on YouTube

Install the M.2 adapter and M.2 drive

Use this information to install the M.2 adapter and M.2 drive.

	"**Read** the installation Guidelines" on page 134	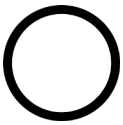 "**Power off** the server for this task" on page 209	 "**ATTENTION: Static Sensitive Device** Ground package before opening" on page 136

Before installing the M.2 adapter and M.2 drive:

1. Touch the static-protective package that contains the new M.2 adapter and M.2 drive to any unpainted surface on the outside of the server. Then, take the new M.2 adapter and M.2 drive out of the package and place them on a static-protective surface.

   Notes:

   - The M.2 adapter is shipped with a loosen screw, but the screw is not necessarily used for the installation.
   - The M.2 adapter you want to install might be different from the following illustrations, but the installation method is the same.

2. Adjust the retainer on the M.2 adapter to accommodate the particular size of the M.2 drive you wish to install. See "Adjust the retainer on the M.2 adapter" on page 171.

3. Locate the connector on the M.2 adapter.

Note: Some M.2 adapters support two identical M.2 drives. Install the M.2 drive in slot 0 first.

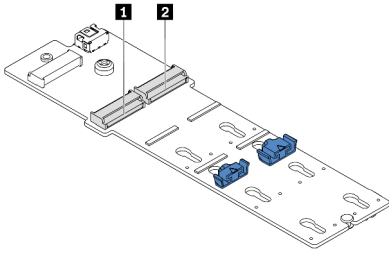

1 Slot 0
2 Slot 1

Figure 120. M.2 drive slot

To install the M.2 adapter and M.2 drive, complete the following steps:

Step 1. Install the M.2/riser support bracket and install the super capacitor modules on it. See "Install a super capacitor module on the internal riser kit" on page 163.

Step 2. Align the pins of the M.2 bracket with the two holes on both sides of the M.2/riser support bracket, and then install the M.2 bracket on the super capacitor modules.

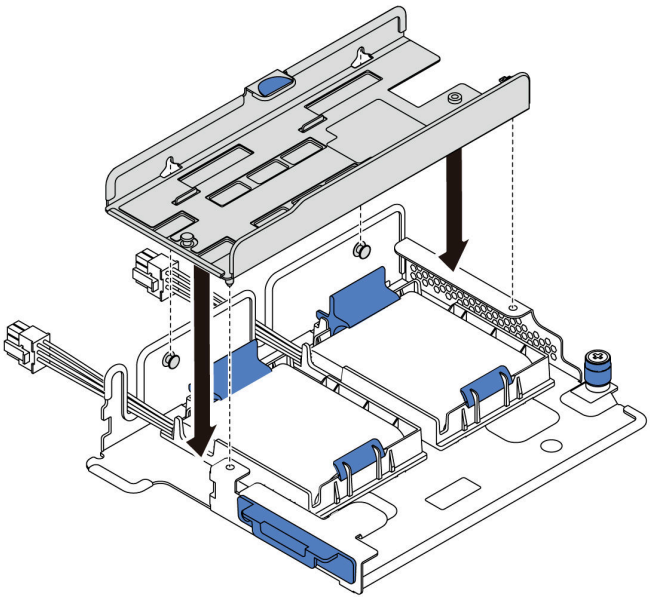

Figure 121. M.2 bracket installation

Step 3. Install the M.2 adapter into the M.2 bracket and tighten the screw.

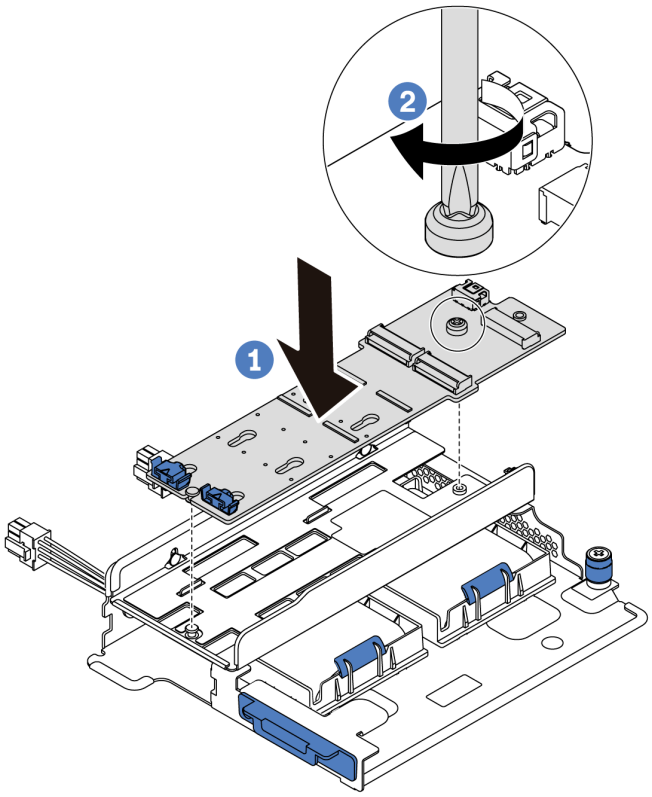

Figure 122. M.2 adapter installation

Step 4. Install the M.2 drive on the M.2 adapter.

a. Insert the M.2 drive at an angle of approximately 30 degrees into the connector.

b. Rotate the M.2 drive down until the notch **1** catches on the lip of the retainer **2**.

c. Slide the retainer forward (toward the connector) to secure the M.2 drive into place.

d.

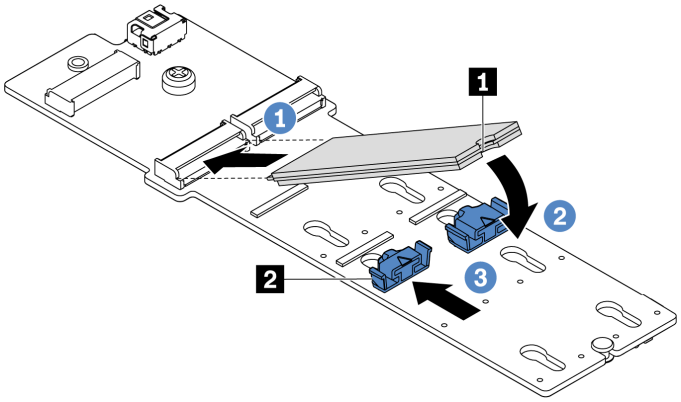

Figure 123. M.2 drive installation

Step 5. Connect the cables to the M.2 backplane and system board. For more information about cable routing, see "M.2 drives" on page 40.

a. Tilt the connector at an angle of 20 degrees or lower, and insert it until its bottom surface reaches the ramp.
b. Press the connector down flat.
c. Tighten the screw on the signal cable.
d. Connect the power cable.

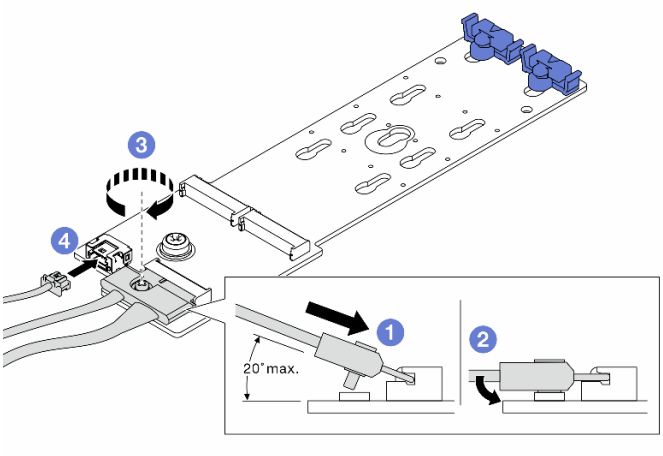

Figure 124. Connecting M.2 cables

Demo video

Watch the procedure on YouTube

Adjust the retainer on the M.2 adapter

Use this information to adjust the retainer on the M.2 adapter.

"**Read** the installation Guidelines" on page 134	"**Power off** the server for this task" on page 209	"**ATTENTION: Static Sensitive Device** Ground package before opening" on page 136

Before adjusting the retainer on the M.2 adapter, locate the correct keyhole that the retainer should be installed into to accommodate the particular size of the M.2 drive you wish to install.

To adjust the retainer on the M.2 adapter, complete the following steps:

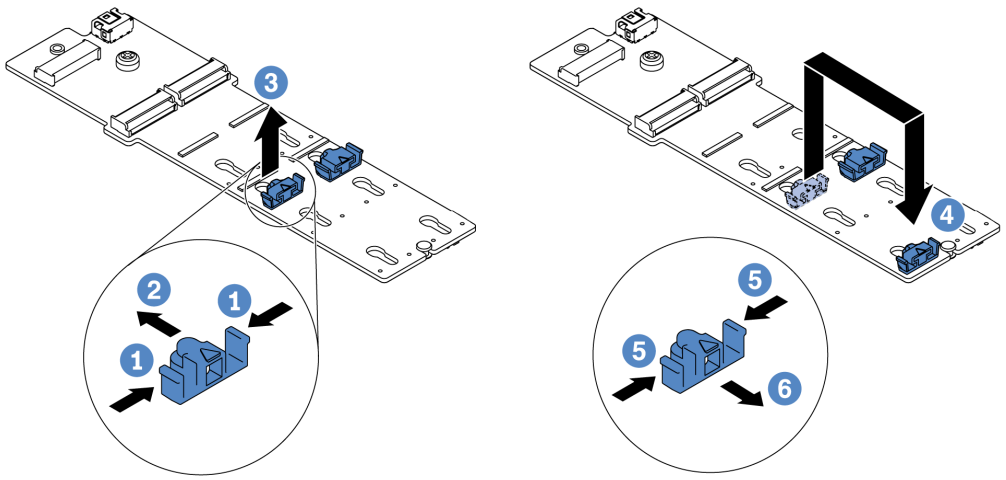

Figure 125. M.2 retainer adjustment

Step 1. Press both sides of the retainer.

Step 2. Move the retainer forward until it is in the large opening of the keyhole.

Step 3. Take the retainer out of the keyhole.

Step 4. Insert the retainer into the correct keyhole.

Step 5. Press both sides of the retainer.

Step 6. Slide the retainer backwards (toward the small opening of the keyhole) until it is seated in place.

Demo video

Watch the procedure on YouTube

Install a backplane

Use this information to remove and install a hot-swap-drive backplane.

This topic contains the following information:

- "Install the front 2.5-inch-drive backplane" on page 172
- "Install the front 3.5-inch-drive backplane" on page 174

Install the front 2.5-inch-drive backplane

Use this information to install the front 2.5-inch-drive backplane.

	"**Read** the installation Guidelines" on page 134	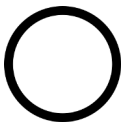 "**Power off** the server for this task" on page 209	 "**ATTENTION: Static Sensitive Device** Ground package before opening" on page 136

Note: Your server supports two types of 2.5-inch-drive backplanes: SATA/SAS 8-bay backplane and NVMe 8-bay backplane. Depending on the backplane type and quantity, the installation location of the backplanes varies.

- One backplane

  Always install the backplane to drive bays 0–7.

- Two backplanes
  - Two SATA/SAS 8-bay backplanes or two NVMe 8-bay backplanes: install the two backplanes to drive bays 0–7 and drive bays 8–15
  - One SATA/SAS 8-bay backplane and one NVMe 8-bay backplane: install the NVMe backplane to drive bays 0–7; install the SATA/SAS backplane to drive bays 8–15
- Three backplanes
  - Three SATA/SAS 8-bay backplanes or three NVMe 8-bay backplanes: install the three backplanes to drive bays 0–7, drive bays 8–15, and drive bays 16–23
  - One NVMe 8-bay backplane and two SATA/SAS 8-bay backplanes: install the NVMe 8-bay backplane to drive bays 0–7, and install the SATA/SAS 8-bay backplanes to drive bays 8–15 and drive bays 16–23.

Before installing the 2.5-inch-drive backplane, touch the static-protective package that contains the new backplane to any unpainted surface on the outside of the server. Then, take the new backplane out of the package and place it on a static-protective surface.

To install the 2.5-inch-drive backplane, complete the following steps:

Step 1. Connect the cables to the backplane. See "Backplanes" on page 50.

Step 2. Align the bottom of the backplane in the slots on the bottom of the chassis. Then, rotate the backplane to vertical position and align the holes in the backplane with the pins on the chassis and press the backplane into position. The release tabs will secure the backplane in place.

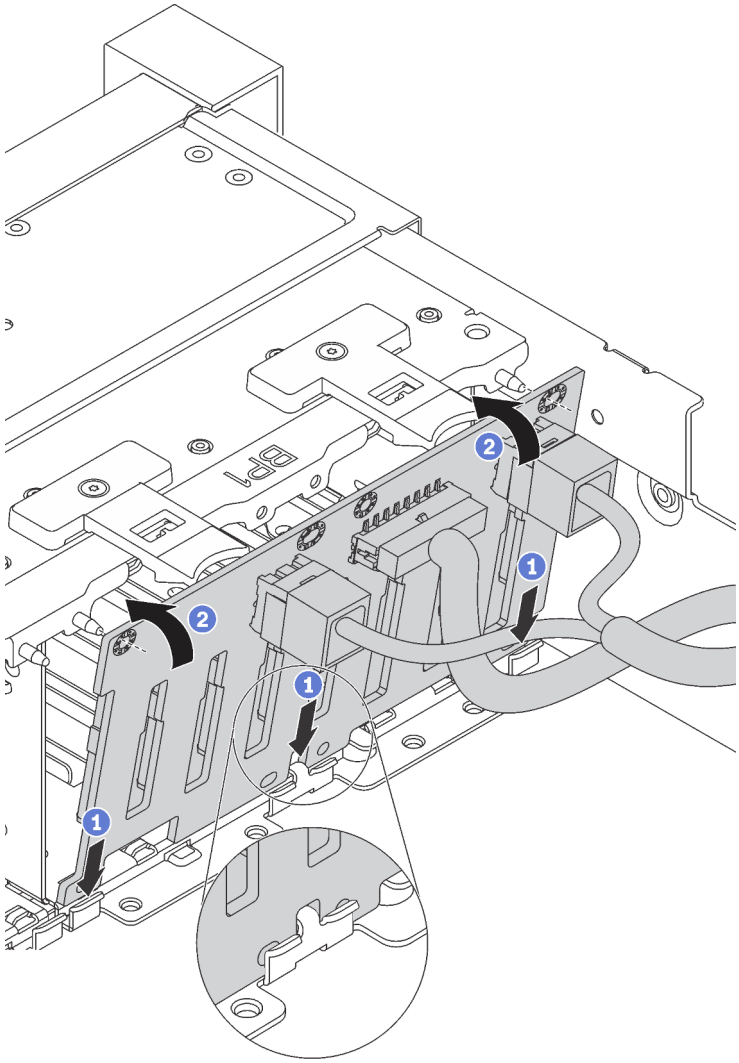

Figure 126. 2.5-inch-drive backplane installation

Demo video

Watch the procedure on YouTube

Install the front 3.5-inch-drive backplane

Use this information to install the front 3.5-inch-drive backplane.

	"**Read** the installation Guidelines" on page 134	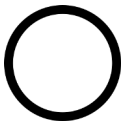 "**Power off** the server for this task" on page 209	 "**ATTENTION: Static Sensitive Device** Ground package before opening" on page 136

Note: The procedure is based on the scenario that you want to install the backplane for up to twelve 3.5-inch drives. The procedure is similar for the backplane for up to eight 3.5-inch drives.

Before installing the 3.5-inch-drive backplane, touch the static-protective package that contains the new backplane to any unpainted surface on the outside of the server. Then, take the new backplane out of the package and place it on a static-protective surface.

To install the 3.5-inch-drive backplane, complete the following steps:

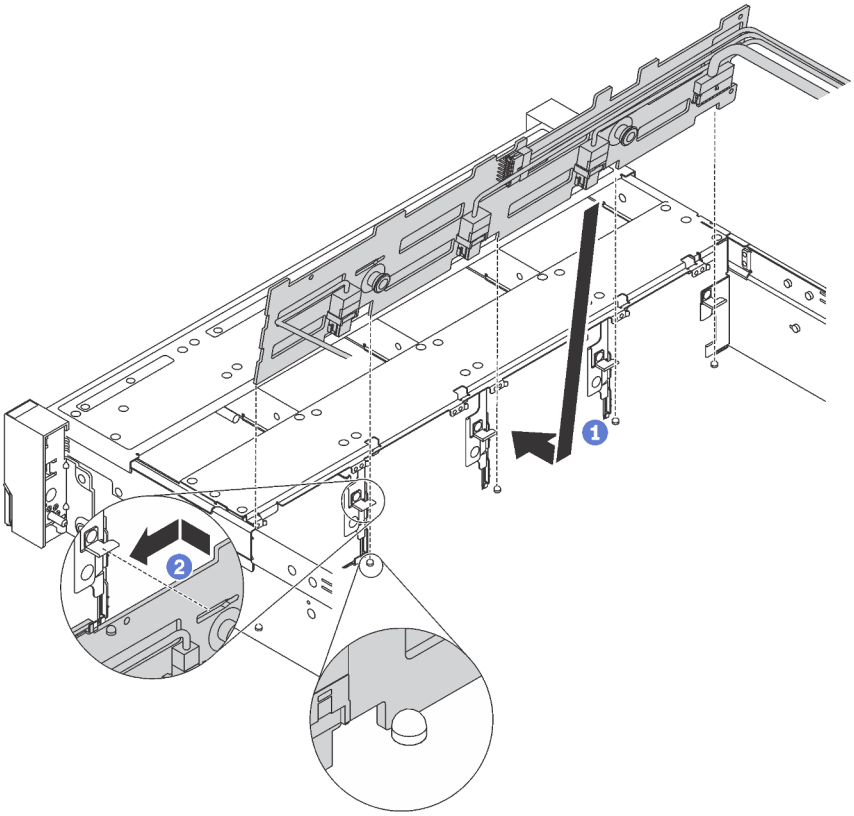

Figure 127. 3.5-inch-drive backplane installation

Step 1. Connect the cables to the backplane. See "Backplanes" on page 50.

Step 2. Align the backplane with the chassis and lower it into the chassis. Then, put the backplane into place with it leaning backward slightly.

Step 3. Rotate the backplane to vertical position to ensure that the four hooks on the chassis pass through the corresponding holes in the backplane. Then, slide the new backplane as shown until it is secured into place.

Demo video

Watch the procedure on YouTube

Install the system fan cage

Use this information to install the system fan cage.

"**Read** the installation Guidelines" on page 134	"**Power off** the server for this task" on page 209	"**ATTENTION: Static Sensitive Device** Ground package before opening" on page 136

To install the system fan cage, complete the following steps:

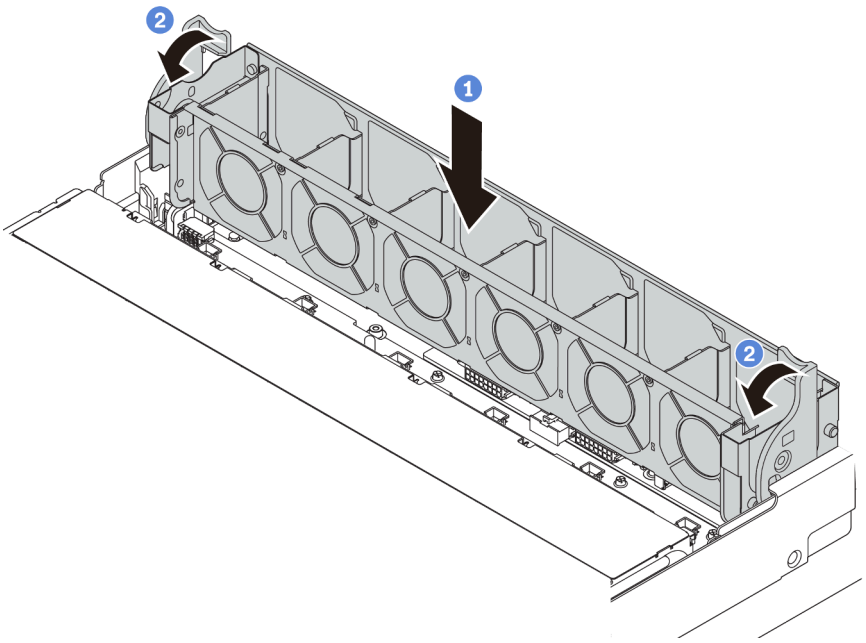

Figure 128. System fan cage installation

Step 1. Align both sides of the system fan cage with the corresponding mounting posts in the chassis. Then, press the system fan cage straight down into the chassis.

Note: If there are system fans installed in the system fan cage, ensure that the system fans are correctly connected to the system fan connectors on the system board.

Step 2. Rotate the levers of the system fan cage to the front of the server to secure the system fan cage.

Demo video

Watch the procedure on YouTube

Install a system fan

Use this information to install a system fan.

	"**Read** the installation Guidelines" on page 134	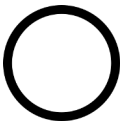 "**Power off** the server for this task" on page 209	 "**ATTENTION: Static Sensitive Device** Ground package before opening" on page 136

S033

CAUTION:
Hazardous energy present. Voltages with hazardous energy might cause heating when shorted with metal, which might result in spattered metal, burns, or both.

S017

CAUTION:
Hazardous moving fan blades nearby.

Before installing a system fan, ensure that you have selected the required system fan. See "Technical rules for system fans" on page 143.

To install a system fan, complete the following steps:

Step 1. Touch the static-protective package that contains the new system fan to any unpainted surface on the outside of the server. Then, take the new system fan out of the package and place it on a static-protective surface.

Step 2. Position the system fan above the system fan cage. The system fan connector on the bottom of the system fan should face the rear of the chassis. Press the system fan straight down until it is seated into place.

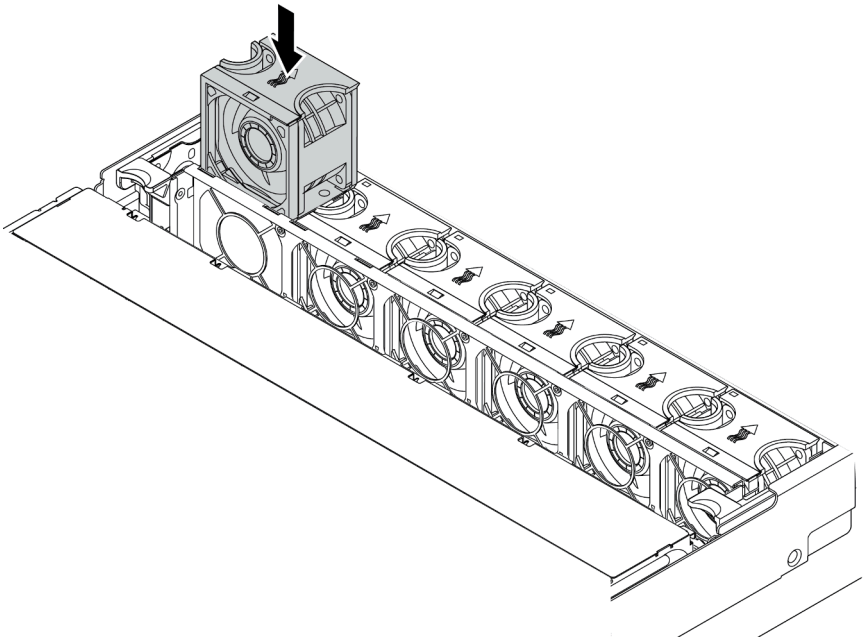

Figure 129. System fan installation

Demo video

Watch the procedure on YouTube

Install the middle 2.5-inch drive cage

Use this information to install the middle 2.5-inch drive bay.

	"**Read** the installation Guidelines" on page 134	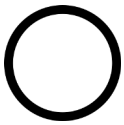 "**Power off** the server for this task" on page 209	 "**ATTENTION: Static Sensitive Device** Ground package before opening" on page 136

Notes:

- The middle drive cage is supported on some server models at certain conditions. For detailed information, see "Drive bay configurations and requirements" on page 139.
- The middle drive cage kit comes with an air baffle, 1U performance heat sink, and performance system fans (speed of 29000 RPM). If the air baffle, heat sink, and system fans of your server differ from those in the kit, replace them.
  - To install the 1U performance heat sink, see "Replace a heat sink" on page 157.
  - To install the performance system fans, see "Install a system fan" on page 176.
  - To install the required air baffle, see "Install the air baffle" on page 196.

To install the middle drive cage, complete the following steps:

Step 1. Connect cables to the backplane.

Step 2. Install the backplane on the middle drive cage.

a. Align the bottom of the backplane with the studs at the bottom of the drive cage.

b. Rotate the backplane to vertical position so that the holes in the backplane pass through the pins on the drive cage, and press the backplane into position. The release latches will secure the backplane in place.

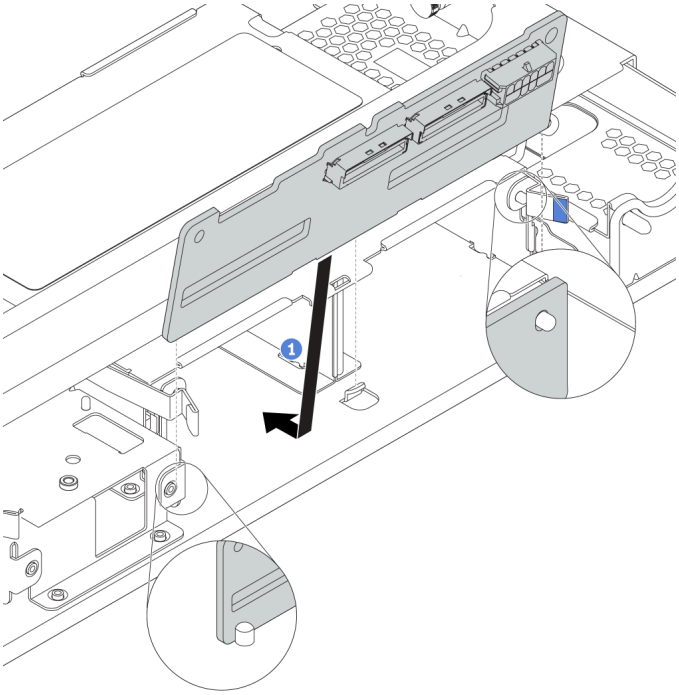

Figure 130. Installing the backplane

Step 3. Install the middle drive cage onto chassis.

a. Put the rear pins into the chassis slots.

b. Rotate the front of the drive cage down into place.

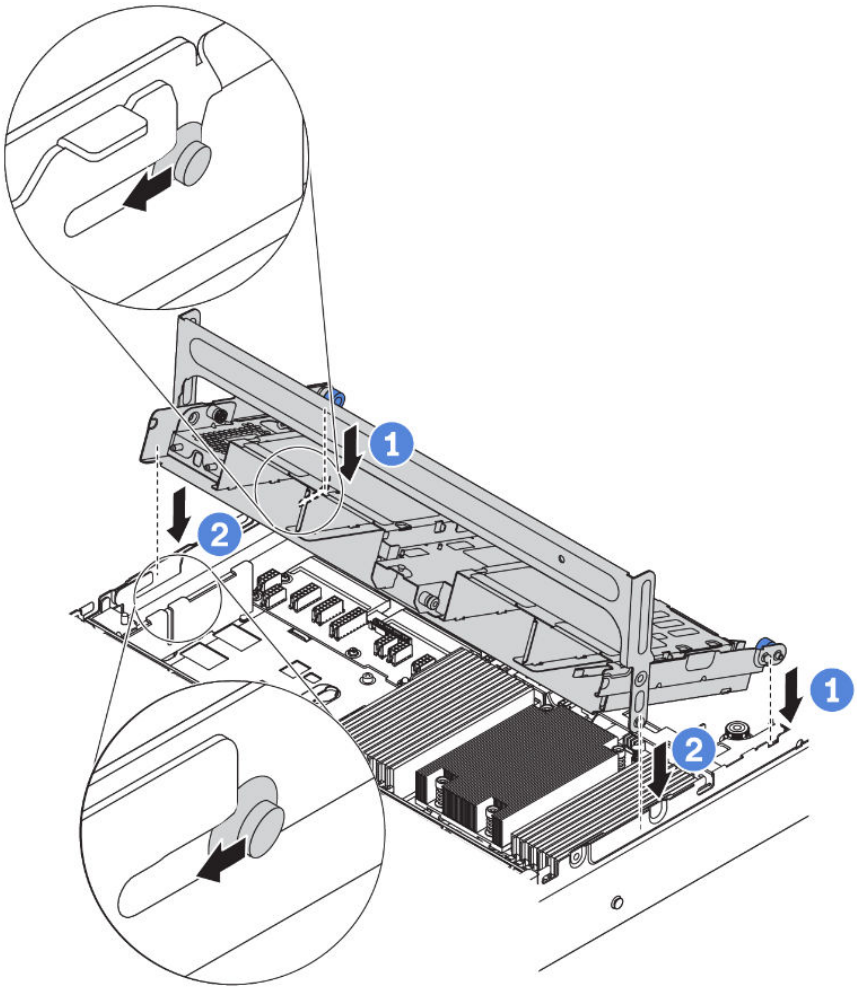

Figure 131. Installing the middle 2.5-inch drive cage

Step 4. Install drives into the middle drive cage. See “Install a hot-swap drive” on page 205.

Note: For an NVMe backplane, only 7 mm NVMe drives (installed in 15 mm-height drive trays) are supported, 15 mm NVMe drives not supported.

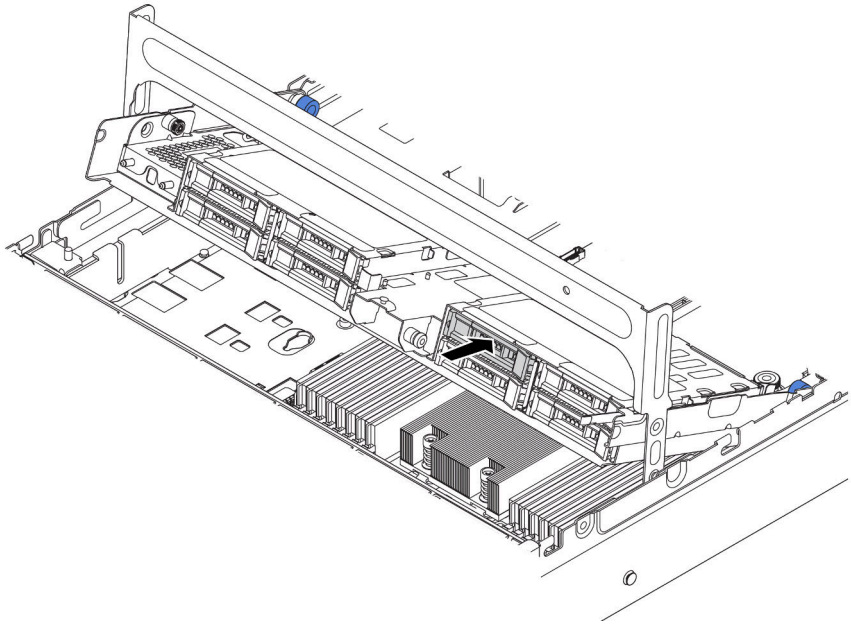

Figure 132. Installing drives into the drive cage

Step 5. Close the drive cage handle.

a. Press the latch as shown.

b. Rotate the handle to close it.

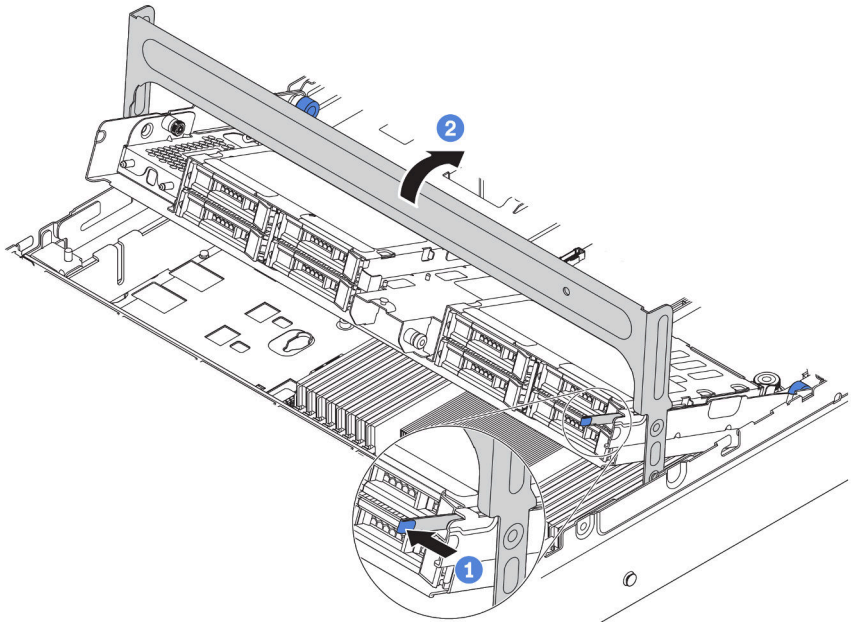

Figure 133. Closing the cage handle

Step 6. Connect cables from the backplanes to a RAID/HBA adapter. See “Internal cable routing” on page 37.

Demo video

Watch the procedure on YouTube

Install the middle 3.5-inch drive cage

Use this information to install the middle 3.5-inch drive cage.

“**Read** the installation Guidelines” on page 134	“**Power off** the server for this task” on page 209	“**ATTENTION: Static Sensitive Device** Ground package before opening” on page 136

Notes:

- The middle drive cage is supported on some server models at certain conditions. For detailed information, see “Drive bay configurations and requirements” on page 139.
- The middle drive cage kit comes with an air baffle, 1U performance heat sink, and performance system fans (speed of 29000 RPM). If the air baffle, heat sink, and system fans of your server differ from those in the kit, replace them.
  - To install the 1U performance heat sink, see “Replace a heat sink” on page 157.
  - To install the performance system fans, see “Install a system fan” on page 176.
  - To install the required air baffle, see “Install the air baffle” on page 196.

To install the middle drive cage, complete the following steps:

Step 1. Connect cables to the backplane.

Step 2. Install the middle backplane on the drive cage.

a. Align the bottom of the backplane with the studs at the bottom of the drive cage. Rotate the backplane to vertical position so that the holes in the backplane pass through the pins on the drive cage.

b. Close the release latches to secure the backplane in place.

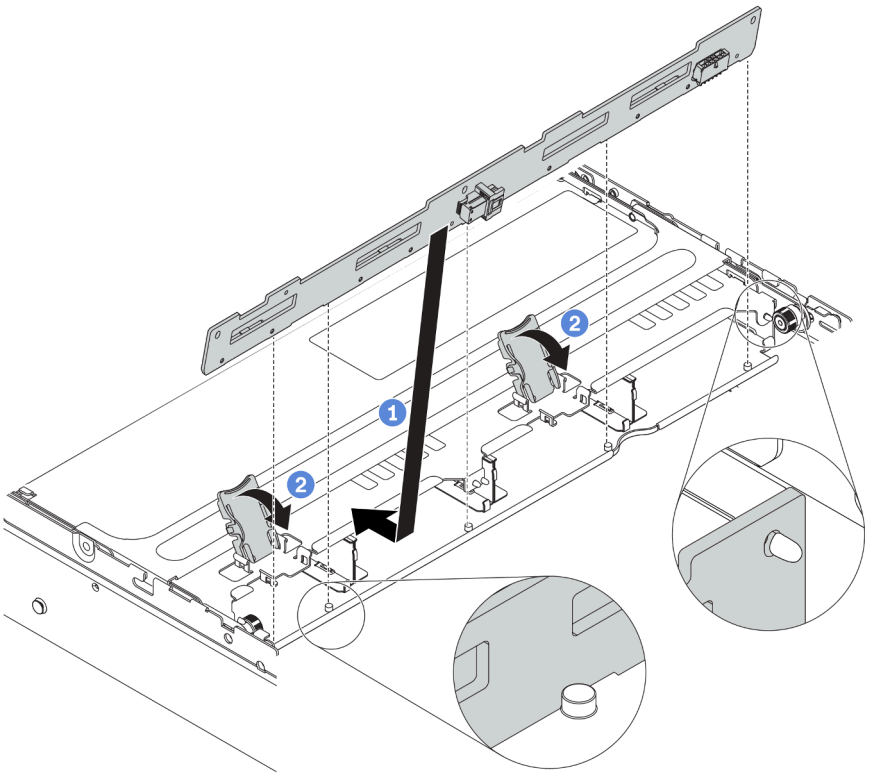

Figure 134. Installing the middle 3.5-inch-drive backplane

Step 3. Install the middle drive cage onto chassis.

a. Put the rear pins into the chassis slots.

b. Rotate the front of the drive cage down into place.

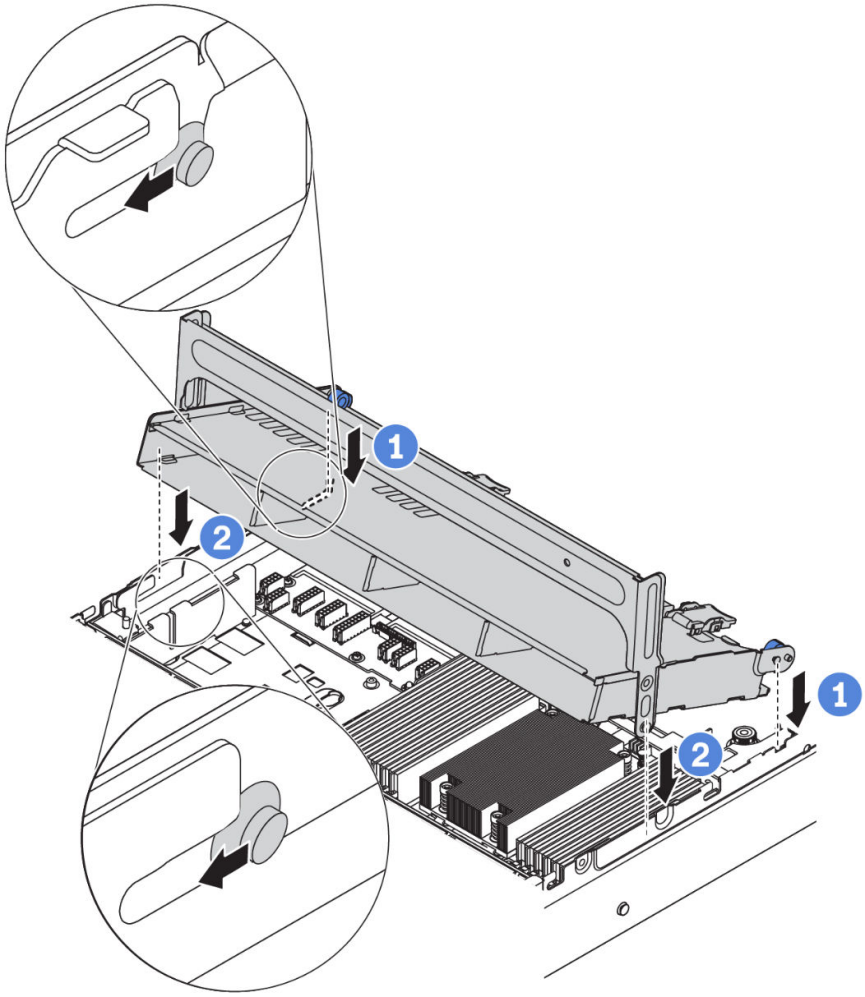

Figure 135. Installing the middle 3.5-inch drive cage

Step 4. Install drives into the middle drive cage. See “Install a hot-swap drive” on page 205.

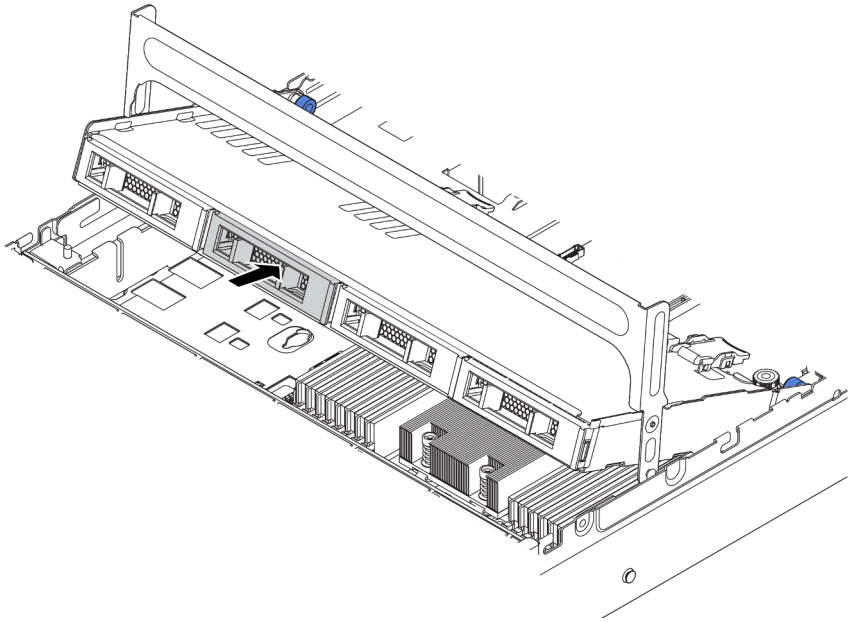

Figure 136. Installing drives into the drive cage

Step 5. Close the drive cage handle.

a. Press the latch as shown.

b. Rotate the handle to close it.

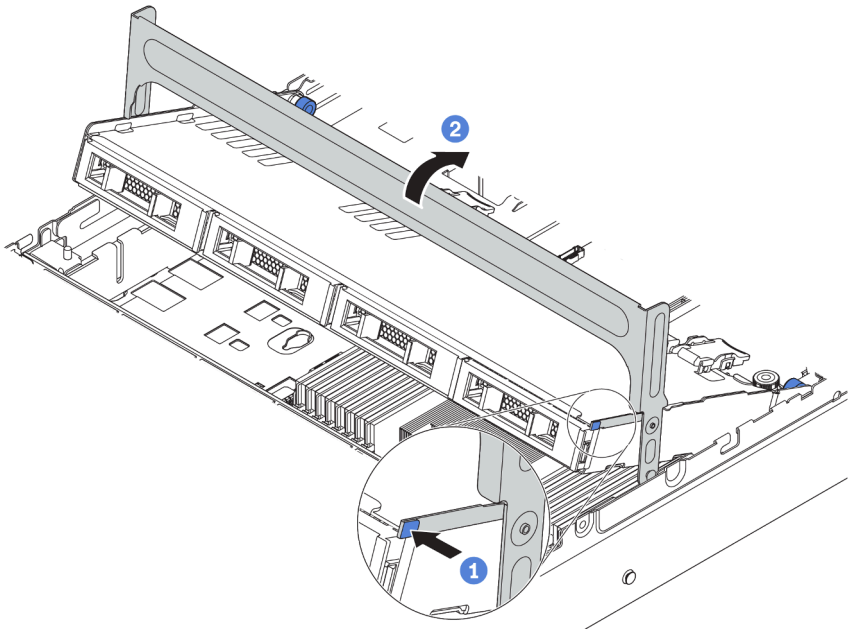

Figure 137. Closing the cage handle

Step 6. Connect cables from the backplane to a RAID/HBA adapter. See “Internal cable routing” on page 37.

Demo video

Watch the procedure on YouTube

Install a PCIe adapter and riser assembly

Use the following information to install a PCIe adapter and riser assembly on the rear of the server.

"**Read** the installation Guidelines" on page 134

"**Power off** the server for this task" on page 209

"**ATTENTION: Static Sensitive Device** Ground package before opening" on page 136

Your server supports the following rear configurations:

Rear configuration	Image
8 PCIe slots: The server has eight PCIe slots, without any rear drive cage. • 1: riser 1 bracket, 3FH • 2: riser 2 bracket, 2FH1LP • 3: riser 3 bracket, 2FH	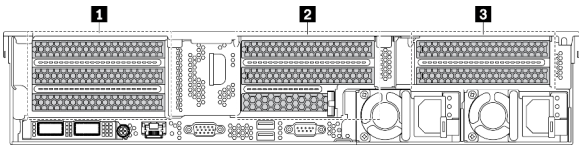
Rear 2.5-inch drive cage: The server has six PCIe slots, with a rear 2.5-inch drive cage. • 1: riser 1 bracket, 3FH • 2: riser 2 bracket, 3LP	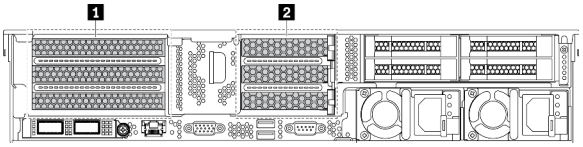
Rear 3.5-inch drive cage: The server has two PCIe slots, with a rear 3.5-inch drive cage. • 1: riser 1 bracket, 1FH • 2: riser 2 bracket, 1LP	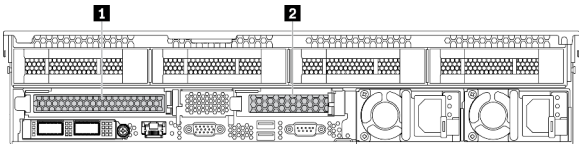

Note: Depending on the specific type, your PCIe adapter, riser card, and riser bracket might look different from the illustrations in this topic. The illustrations show how to install a PCIe adapter onto riser card 1 in riser 1 bracket. The installation procedure is similar for other riser brackets.

Before installing a PCIe adapter:

1. Touch the static-protective package that contains the new PCIe adapter to any unpainted surface on the outside of the server. Then, take the new PCIe adapter out of the package and place it on a static-protective surface.
2. If you are going to install a RAID/HBA adapter, refer to "Technical rules for HBA/RAID adapters" on page 144.
3. If you are going to install a PCIe Flash storage adapter, refer to "Technical rules for PCIe Flash storage adapters" on page 151.
4. If you are going to install a GPU adapter, refer to "Install a GPU adapter" on page 188.
5. If you are going to insatll a PCIe network adapter, note that PCIe network adapter of 10 GbE or higher can not be installed in slot 3.
6. Locate an appropriate PCIe slot. Refer to "Rear view" on page 23 to identify the PCIe slots.

   Notes: The following adapters require a full-height bracket and must be installed in a full-height slot:

   - ThinkSystem Broadcom 57454 10/25GbE SFP28 4-port PCIe Ethernet Adapter
   - ThinkSystem Broadcom 57454 10/25GbE SFP28 4-port PCIe Ethernet Adapter_Refresh (V2)

To install a PCIe adapter, complete the following steps:

Step 1. Align the PCIe adapter with the PCIe slot on the riser card. Carefully press the PCIe adapter straight into the slot until it is securely seated and its bracket also is secured. Then, pivot the PCIe adapter retention latch to the closed position.

Note: Carefully handle the PCIe adapter by its edges.

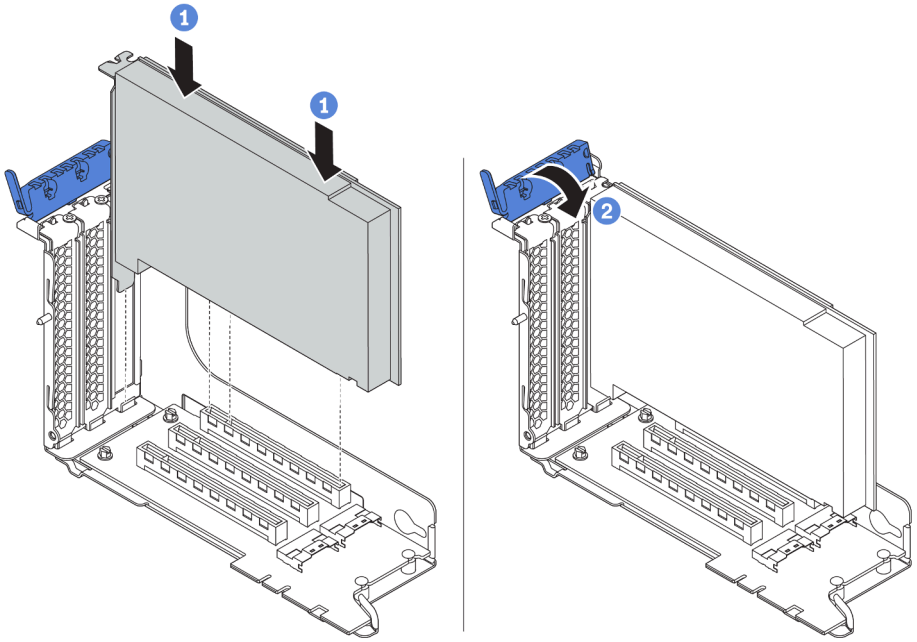

Figure 138. PCIe adapter installation

Step 2. Install the riser assembly.

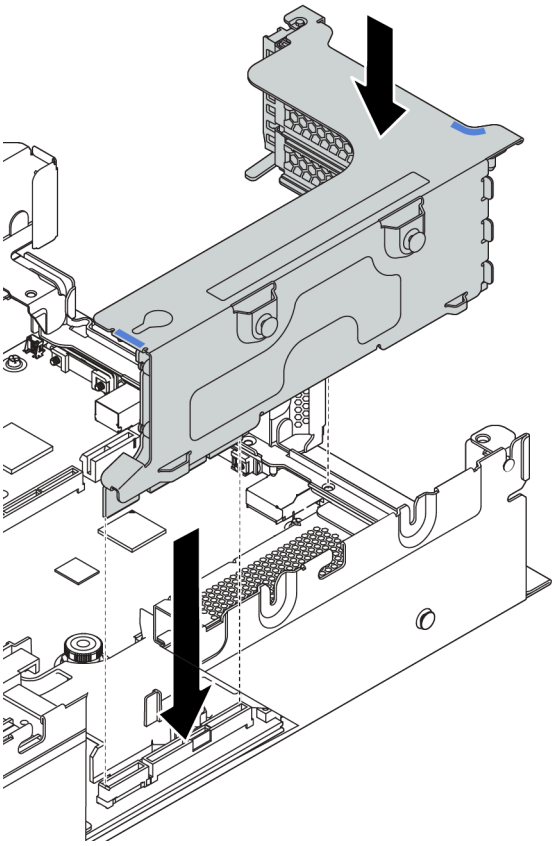

Step 3. Connect cables to the riser card and PCIe adapter. “Internal cable routing” on page 37.

Demo video

Watch the procedure on YouTube

Install a GPU adapter

Use this information to install a GPU adapter.

	“**Read** the installation Guidelines” on page 134	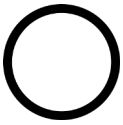 “**Power off** the server for this task” on page 209	 “**ATTENTION: Static Sensitive Device** Ground package before opening” on page 136

Note: GPU adapters are supported on some server models with requirements. See “Technical rules for GPU adapters” on page 145.

The GPU adapter kit comes with a 1U performance heat sink, performance system fans (speed of 29000 RPM), and GPU air baffles. Before installing the GPU:

1. Install the 1U performance heat sink. See “Replace a heat sink” on page 157.
2. Install the performance system fans. See “Install a system fan” on page 176.
3. Install the required air baffle. See “Install the air baffle” on page 196.

To install a GPU adapter, complete the following steps:

Step 1. Depending on the GPU type, install the add-on GPU air baffle for the GPU adapter.

- For a double-wide GPU adapter (for example, NVIDIA V100 GPU): If the GPU adapter does not have a bracket installed, install the screws to secure the GPU bracket 1 to the GPU adapter. Then, install the add-on GPU air baffle 2 to the GPU adapter.

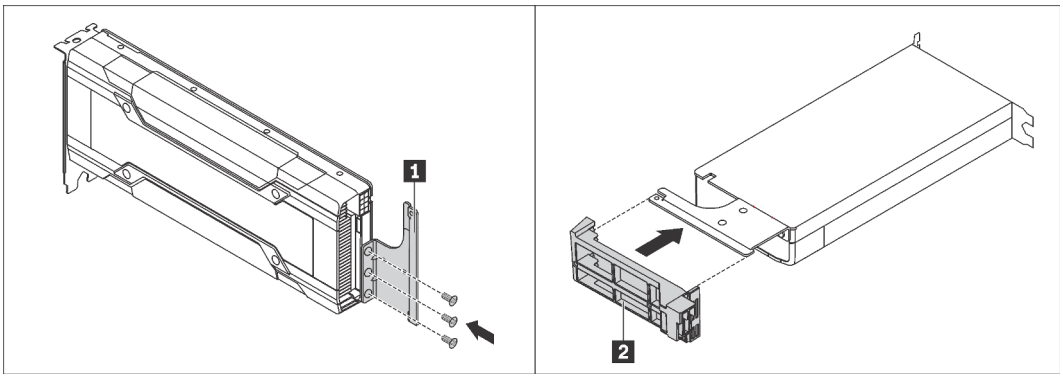

Figure 139. Installing the add-on GPU air baffle for a double-wide GPU adapter

- For a single-wide GPU adapter (for example, NVIDIA T4 GPU), install the add-on GPU air baffle onto the air baffle.

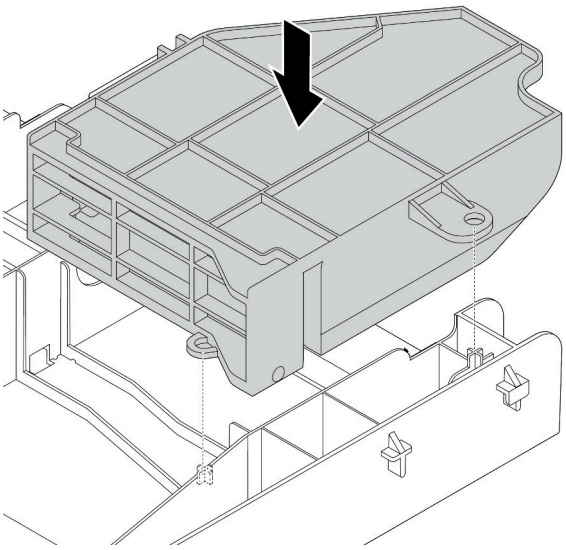

Figure 140. Installing the add-on GPU air baffle for a single-wide GPU adapter

Step 2. Locate the appropriate PCIe slot for the GPU adapter.

Step 3. Align the GPU adapter with the PCIe slot on the riser card. Then, carefully press the GPU adapter straight into the slot until it is securely seated. See "Install a PCIe adapter and riser assembly" on page 186.

Step 4. Connect the power cable to the power connector on the GPU. See "GPU adapters" on page 45.

Step 5. Install the riser assembly. See "Install a PCIe adapter and riser assembly" on page 186.

Demo video

Watch the procedure on YouTube

Install the rear 2.5-inch drive cage

Use this information to install the rear 2.5-inch drive cage.

"**Read** the installation Guidelines" on page 134	"**Power off** the server for this task" on page 209	"**ATTENTION: Static Sensitive Device** Ground package before opening" on page 136

Note: The rear drive cage is supported on some server models at certain conditions. For detailed information, see "Drive bay configurations and requirements" on page 139.

The rear drive cage kit comes with required riser brackets, rear wall bracket, and performance system fans (speed of 29000 RPM). Before installing the rear drive cage:

1. Install the rear wall bracket.

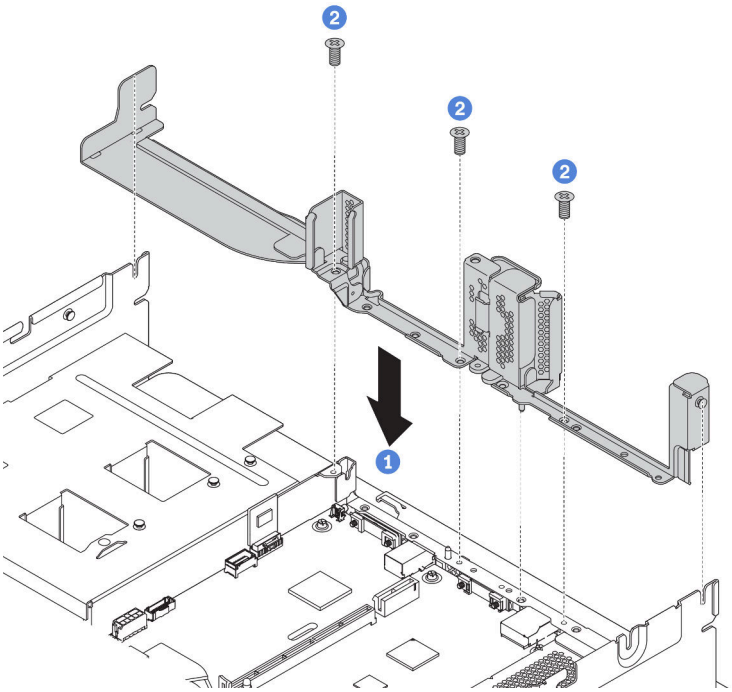

Figure 141. Installing rear wall bracket for the rear 2.5-inch drive cage

2. Install the required riser assemblies. See "Install a PCIe adapter and riser assembly" on page 186.
3. Install the performance system fans. See "Install a system fan" on page 176.

To install the rear drive cage, complete the following steps:

Step 1. Connect cables to the backplane.

Step 2. Install the backplane on the drive cage.

a. Align the bottom of the backplane with the studs at the bottom of the drive cage.

b. Rotate the backplane to vertical position so that the holes in the backplane pass through the pins on the drive cage, and press the backplane into position. The release latches will secure the backplane in place.

Note: The illustration shows installing a backplane to the middle drive cage. It is the same for installing the backplane to the rear drive cage.

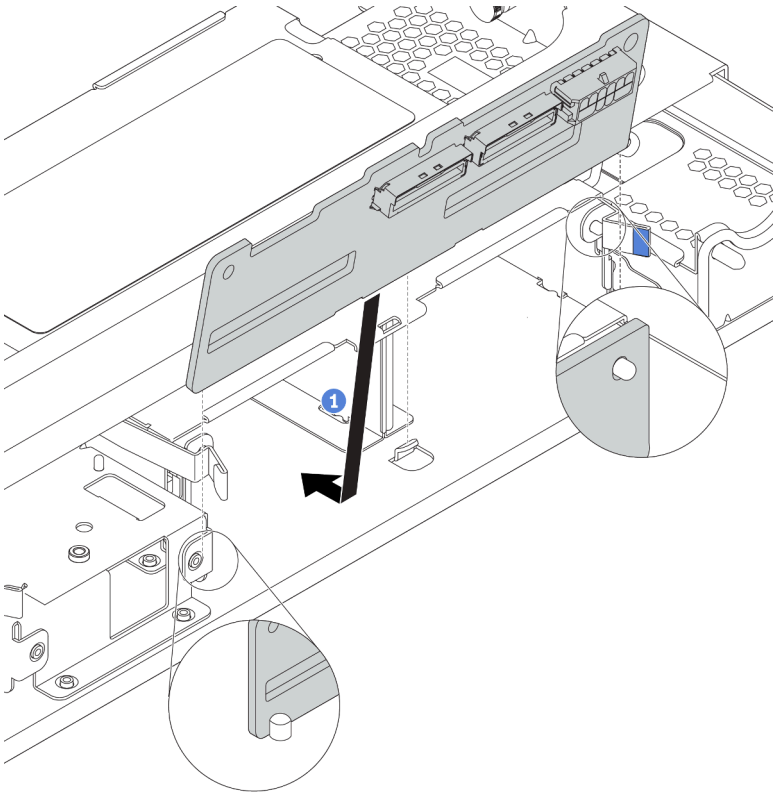

Figure 142. Installing the backplane

Step 3. Install the rear drive cage into the chassis.

a. Align the rear drive cage with the chassis, and lower the drive cage into the chassis.

b. Move the rear drive cage forward until it clicks into position. Ensure that the blue plunger is latched into place to secure the rear drive cage.

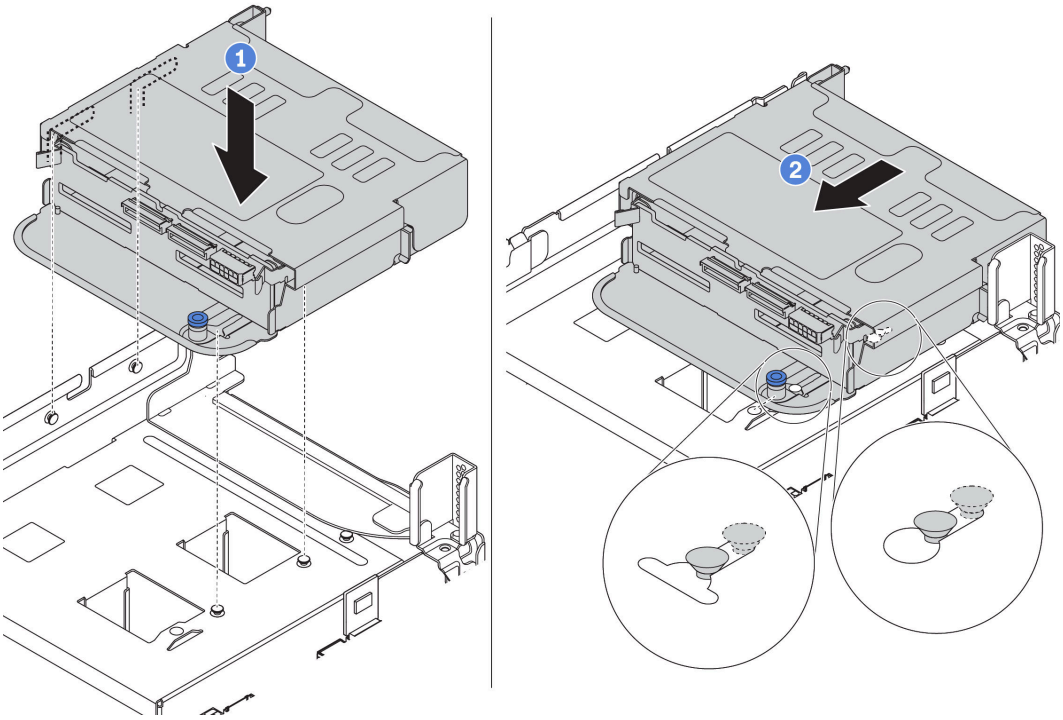

Figure 143. Installing the rear 2.5-inch drive cage

Step 4. Install drives into the drive cage. See "Install a hot-swap drive" on page 205.

Note: For an NVMe backplane, only 7 mm NVMe drives (installed in 15 mm-height drive trays) are supported, 15 mm NVMe drives not supported.

Step 5. Connect cables from the backplane to a RAID/HBA adapter. See "Internal cable routing" on page 37.

Demo video

Watch the procedure on YouTube

Install the rear 3.5-inch drive cage

Use this information to install the rear 3.5-inch drive cage.

"**Read** the installation Guidelines" on page 134	"**Power off** the server for this task" on page 209	"**ATTENTION: Static Sensitive Device** Ground package before opening" on page 136

Notes:

- The rear drive cage is supported on some server models at certain conditions. For detailed information, see “Drive bay configurations and requirements” on page 139.

The rear drive cage kit comes with required riser brackets, rear wall bracket, and performance system fans (speed of 29000 RPM). Before installing the rear drive cage:

1. Install the rear wall bracket.

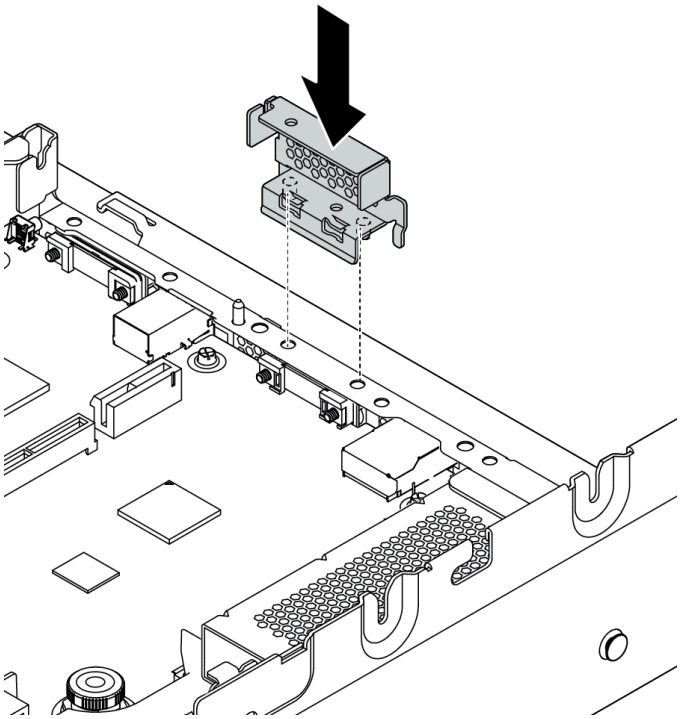

Figure 144. Installing rear wall bracket for the rear 3.5-inch drive cage

2. Install the required riser assemblies. See “Install a PCIe adapter and riser assembly” on page 186.
3. Install the performance system fans. See “Install a system fan” on page 176.

To install the rear drive cage, complete the following steps:

Step 1. Connect cables to the backplane.

Step 2. Install the backplane on the rear drive cage.

a. Align the bottom of the backplane with the studs at the bottom of the drive cage. Rotate the backplane to vertical position so that the holes in the backplane pass through the pins on the drive cage.

b. Close the release latches to secure the backplane in place.

Note: The illustration shows installing a backplane to the middle drive cage. It is the same for installing the backplane to the rear drive cage.

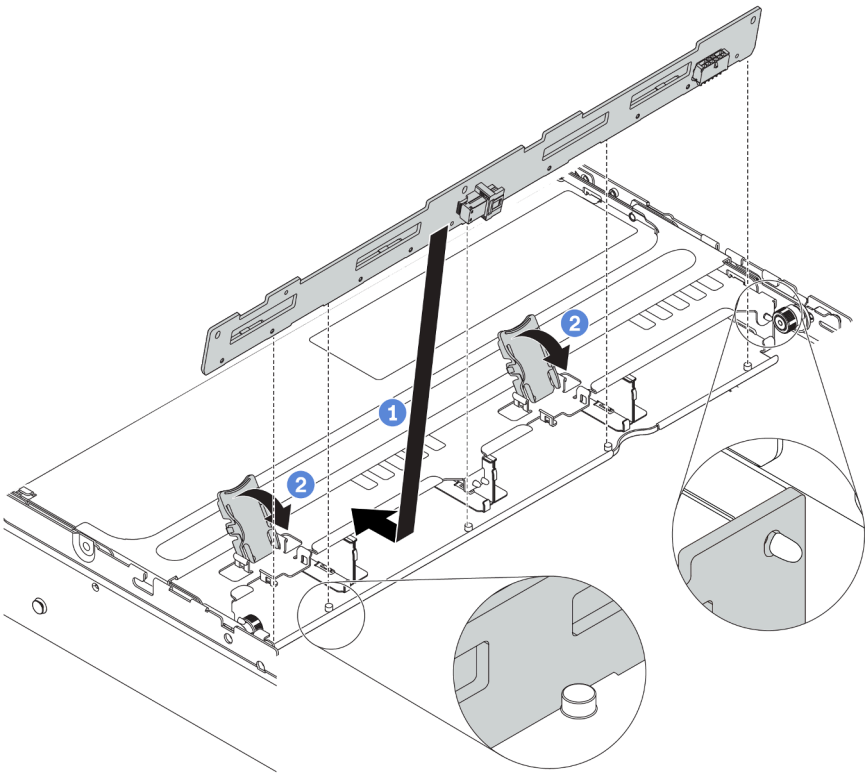

Figure 145. Installing the backplane

Step 3. Install the rear drive cage into the chassis.

a. Align the rear drive cage with the chassis, and lower the drive cage into the chassis.

b. Move the rear drive cage forward until it clicks into position. Ensure that the blue plunger is latched into place to secure the rear drive cage.

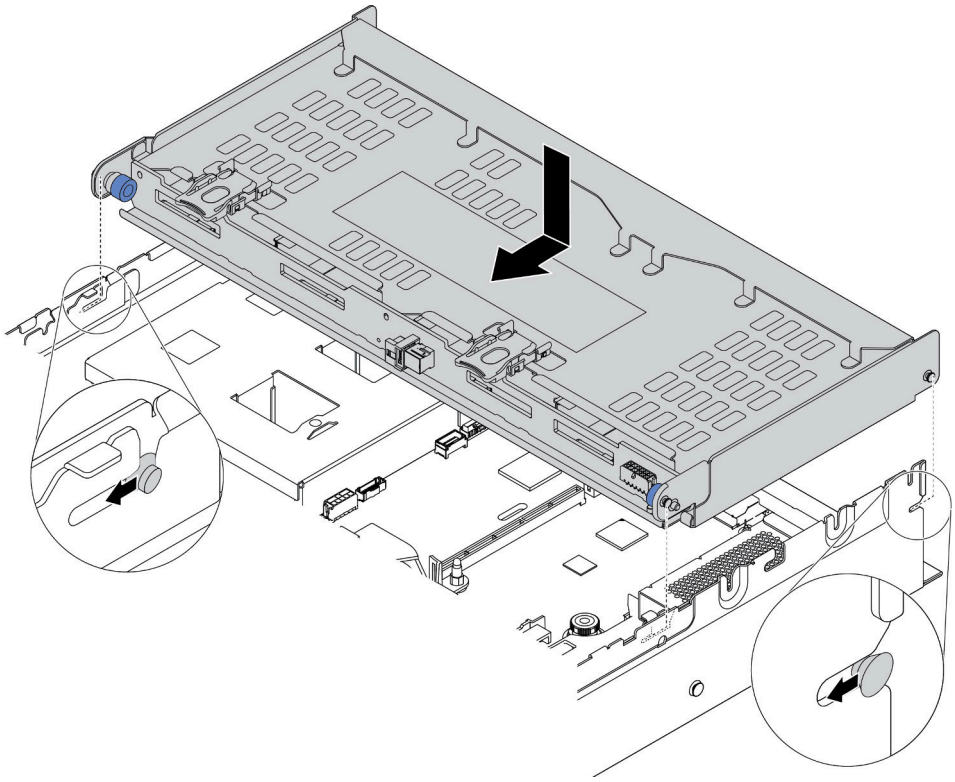

Figure 146. Installing the rear 3.5-inch drive cage

Step 4. Install drives into the drive cage. See "Install a hot-swap drive" on page 205.

Step 5. Connect cables from the backplane to a RAID/HBA adapter. See "Internal cable routing" on page 37.

Demo video

Watch the procedure on YouTube

Install the OCP 3.0 Ethernet adapter

Use this information to install the OCP 3.0 Ethernet adapter.

	"**Read** the installation Guidelines" on page 134	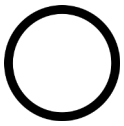 "**Power off** the server for this task" on page 209
	"**ATTENTION: Static Sensitive Device** Ground package before opening" on page 136	

CAUTION:
Make sure that all server power cords are disconnected from their power sources before performing this procedure.

Before installing the OCP 3.0 Ethernet adapter:

1. Touch the static-protective package that contains the new OCP 3.0 Ethernet adapter to any unpainted surface on the outside of the server. Then, take the new OCP 3.0 Ethernet adapter out of the package and place it on a static-protective surface.
2. Remove the OCP 3.0 Ethernet adapter filler if there is.

To install the OCP 3.0 Ethernet adapter, complete the following steps:

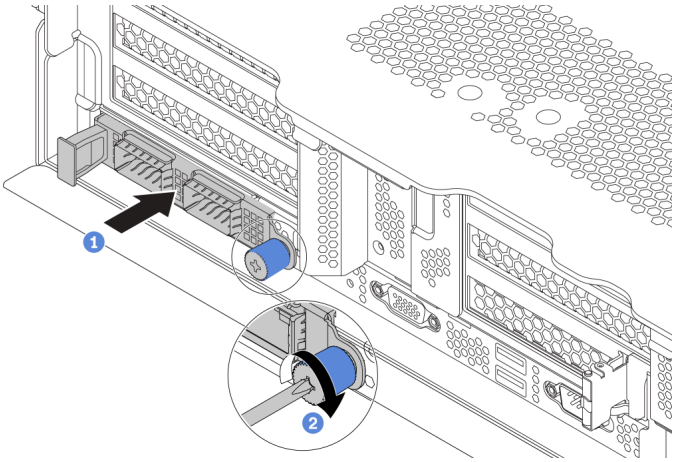

Figure 147. OCP 3.0 Ethernet adapter installation

Step 1. Push the OCP 3.0 Ethernet adapter as shown to insert it into the connector on the system board.

Step 2. Tighten the thumbscrew to secure the card.

Figure 148. OCP module (two connectors)

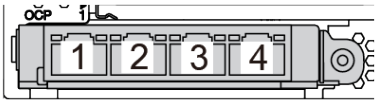

Figure 149. OCP module (four connectors)

Notes:

- The OCP 3.0 Ethernet adapter provides two or four extra Ethernet connectors for network connections.
- Any of the connectors (connector 1 by default) on the OCP module can function as a shared management connector.

Demo video

Watch the procedure on YouTube

Install the air baffle

Use this information to install the air baffle.

"**Read** the installation Guidelines" on page 134

"**Power off** the server for this task" on page 209

S033

CAUTION:
Hazardous energy present. Voltages with hazardous energy might cause heating when shorted with metal, which might result in spattered metal, burns, or both.

S017

CAUTION:
Hazardous moving fan blades nearby.

Before installing the air baffle:

1. Ensure that no tools or loose screws are left inside your server.
2. Ensure that all components have been reassembled correctly.
3. Ensure that all cables inside the server have been properly routed and they will not interfere with installing the air baffle.
4. Select the appropriate air baffle for your server depending on the server model.

Table 16. Air baffles

If...	Then choose...
The server has no middle drive cage or GPU adapter installed.	Standard air baffle 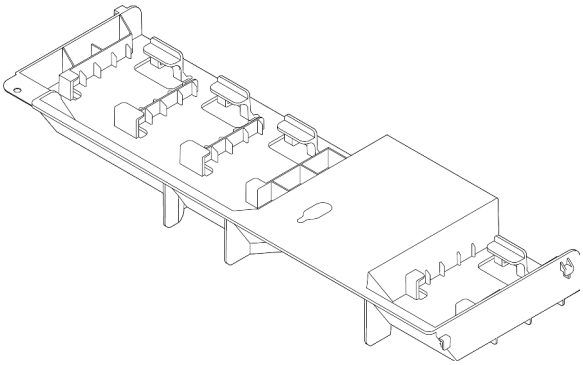
The server has GPU adapters installed, but no middle drive cage or rear drive cage installed. **Note:** The GPU kit also comes with an add-on GPU air baffle for the GPU. For details, see "Install a GPU adapter" on page 188.	Air baffle for GPU 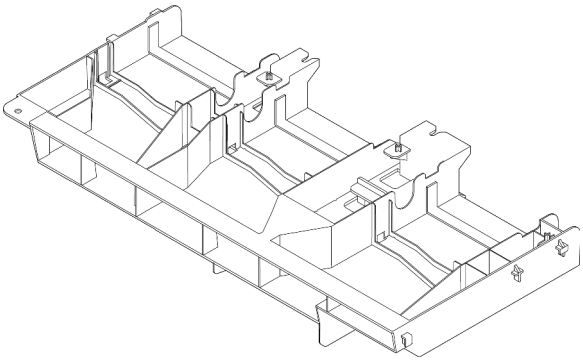
The server has the middle 8 x 2.5-inch drive cage installed.	Air baffle for middle 8 x 2.5-inch drive cage 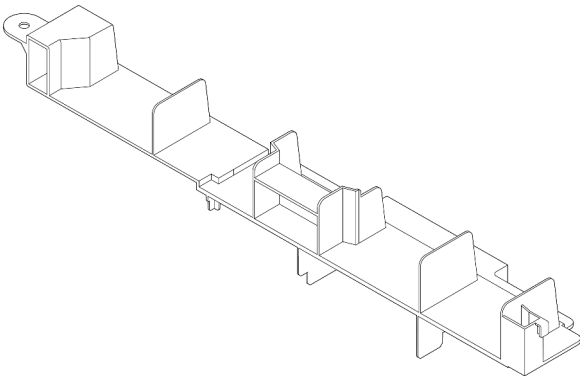
The server has the middle 4 x 3.5-inch drive cage installed.	Air baffle for middle 4 x 3.5-inch drive cage 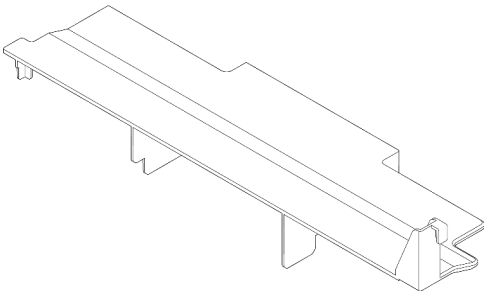

To install the air baffle, complete the following steps:

Step 1. Note the orientation of the air baffle.

Step 2. Align the tabs on both sides of the air baffle with the corresponding slots on both sides of the chassis. Then, lower the air baffle into the chassis and press the air baffle down until it is securely seated.

Note: The illustration shows installing the standard air baffle. The procedure is the same for installing the other air baffles.

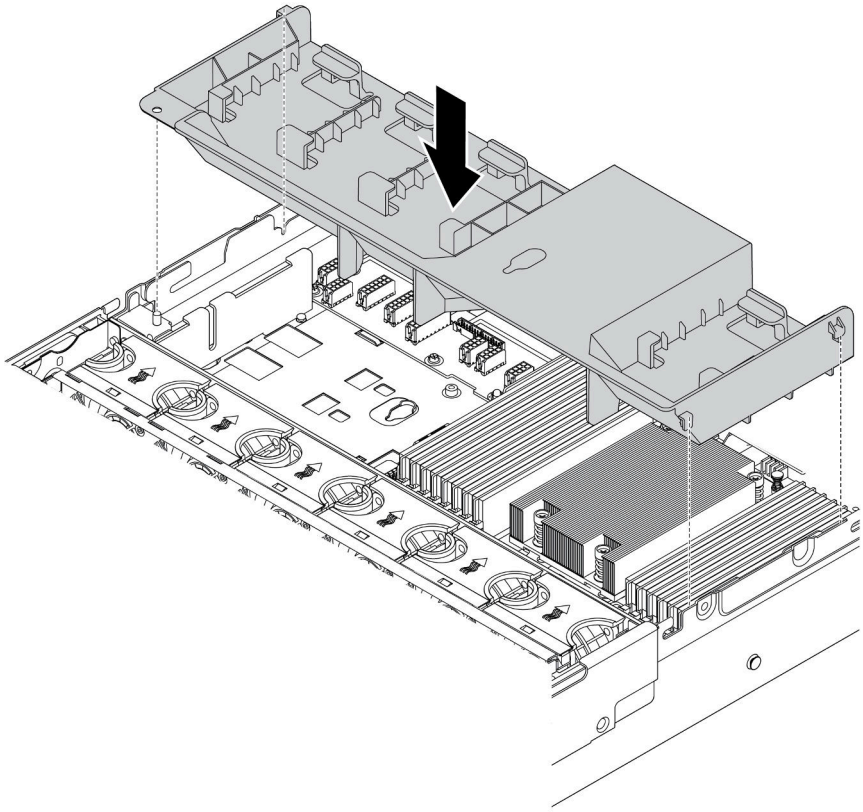

Figure 150. Installation of the standard air baffle

Demo video

Watch the procedure on YouTube

Install the top cover

Use this information to install the top cover.

"**Read** the installation Guidelines" on page 134	"**Power off** the server for this task" on page 209	"**ATTENTION: Static Sensitive Device** Ground package before opening" on page 136

Before you install the top cover:

1. Ensure that all cables, adapters, and other components are installed and seated correctly and that you have not left loose tools or parts inside the server.
2. Ensure that all internal cables are connected and routed correctly. See “Internal cable routing” on page 37.

To install the top cover, complete the following steps:

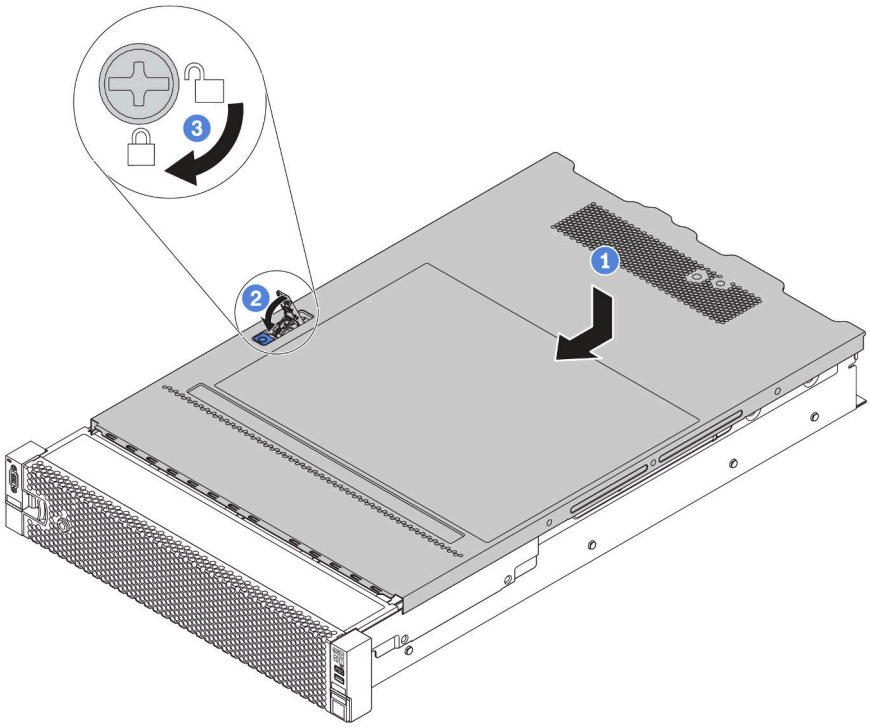

Figure 151. Top cover installation

Step 1. Ensure that the cover latch is in the open position. Lower the top cover onto the chassis until both sides of the top cover engage the guides on both sides of the chassis. Then, slide the top cover to the front of the chassis.

Note: Before you slide the top cover forward, ensure that all the tabs on the top cover engage the chassis correctly.

Step 2. Pivot the cover latch until the top cover snaps into position. Ensure that the cover latch is completely closed

Step 3. Use a screwdriver to turn the cover lock to the locked position.

Demo video

Watch the procedure on YouTube

Install a hot-swap power supply

Use this information to install a hot-swap power supply.

“**Read** the installation Guidelines” on page 134

“**ATTENTION: Static Sensitive Device** Ground package before opening” on page 136

The following tips describe the type of power supply that the server supports and other information that you must consider when you install a power supply:

- The standard shipping has only one power supply installed in the server. For redundancy and hot-swap support, you must install an additional hot-swap power supply. Certain customized models might be shipped with two power supplies installed.
- Ensure that the devices that you are installing are supported. For a list of supported optional devices for the server, go to:
  https://serverproven.lenovo.com/

Note: Ensure that the two power supplies installed on the server have the same wattage.

S035

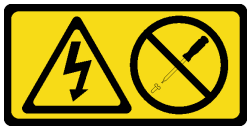

CAUTION:
Never remove the cover on a power supply or any part that has this label attached. Hazardous voltage, current, and energy levels are present inside any component that has this label attached. There are no serviceable parts inside these components. If you suspect a problem with one of these parts, contact a service technician.

S002

CAUTION:
The power-control button on the device and the power switch on the power supply do not turn off the electrical current supplied to the device. The device also might have more than one power cord. To remove all electrical current from the device, ensure that all power cords are disconnected from the power source.

S001

DANGER

Electrical current from power, telephone, and communication cables is hazardous.
To avoid a shock hazard:

- **Do not connect or disconnect any cables or perform installation, maintenance, or reconfiguration of this product during an electrical storm.**
- **Connect all power cords to a properly wired and grounded electrical outlet.**
- **Connect any equipment that will be attached to this product to properly wired outlets .**
- **When possible, use one hand only to connect or disconnect signal cables.**
- **Never turn on any equipment when there is evidence of fire, water, or structural damage.**
- **Disconnect the attached power cords, telecommunications systems, networks, and modems before you open the device covers, unless instructed otherwise in the installation and configuration procedures.**
- **Connect and disconnect cables as described in the following table when installing, moving, or opening covers on this product or attached devices.**

To Connect:	**To Disconnect:**
1. Turn everything OFF. 2. Attach all cables to devices. 3. Attach signal cables to connectors. 4. Attach power cords to outlet. 5. Turn device ON.	1. Turn everything OFF. 2. Remove power cords from outlet. 3. Remove signal cables from connectors. 4. Remove all cables from devices.

The following tips describe the information that you must consider when you install a power supply with dc input.

CAUTION:
240 V dc input (input range: 180-300 V dc) is supported in Chinese Mainland ONLY. Power supply with 240 V dc input cannot support hot plugging power cord function. Before removing the power supply with dc input, please turn off server or disconnect dc power sources at the breaker panel or by turning off the power source. Then, remove the power cord.

在直流输入状态下，若电源供应器插座不支持热插拔功能，请务必不要对设备电源线进行热插拔，此操作可能导致设备损坏及数据丢失。因错误执行热插拔导致的设备故障或损坏，不属于保修范围。

NEVER CONNECT AND DISCONNECT THE POWER SUPPLY CABLE AND EQUIPMENT WHILE YOUR EQUIPMENT IS POWERED ON WITH DC SUPPLY (hot-plugging). Otherwise you may damage the equipment and result in data loss, the damages and losses result from incorrect operation of the equipment will not be covered by the manufacturers' warranty.

S035

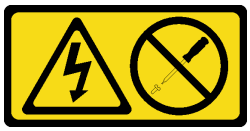

CAUTION:
Never remove the cover on a power supply or any part that has this label attached. Hazardous voltage, current, and energy levels are present inside any component that has this label attached. There are no serviceable parts inside these components. If you suspect a problem with one of these parts, contact a service technician.

S019

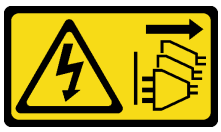

CAUTION:
The power-control button on the device does not turn off the electrical current supplied to the device. The device also might have more than one connection to dc power. To remove all electrical current from the device, ensure that all connections to dc power are disconnected at the dc power input terminals.

Before installing a hot-swap power supply, touch the static-protective package that contains the new hot-swap power supply to any unpainted surface on the outside of the server. Then, take the new hot-swap power supply out of the package and place it on a static-protective surface.

To install a hot-swap power supply, complete the following steps:

Step 1. If the server is in a rack, adjust the cable management arm (CMA) to gain access to the power supply bay.

If you have installed the 2U CMA Upgrade Kit for Toolless Slide Rail or Toolless Slide Rail Kit with 2U CMA, do the following:

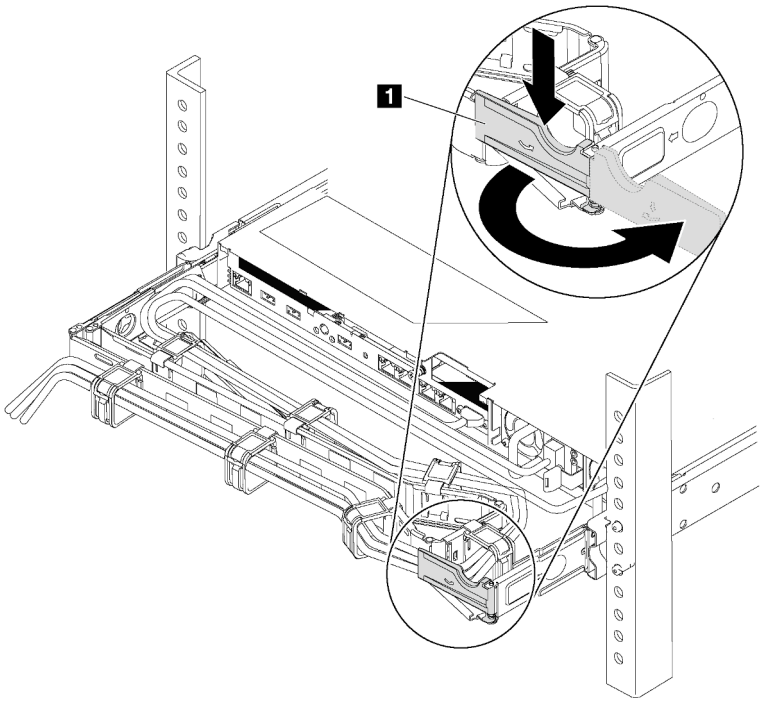

Figure 152. CMA adjustment

a. Press down the stop bracket **1** and rotate it to the open position.

b. Rotate the CMA out of the way to gain access to the power supply bay.

Step 2. If there is a power-supply filler installed, remove it.

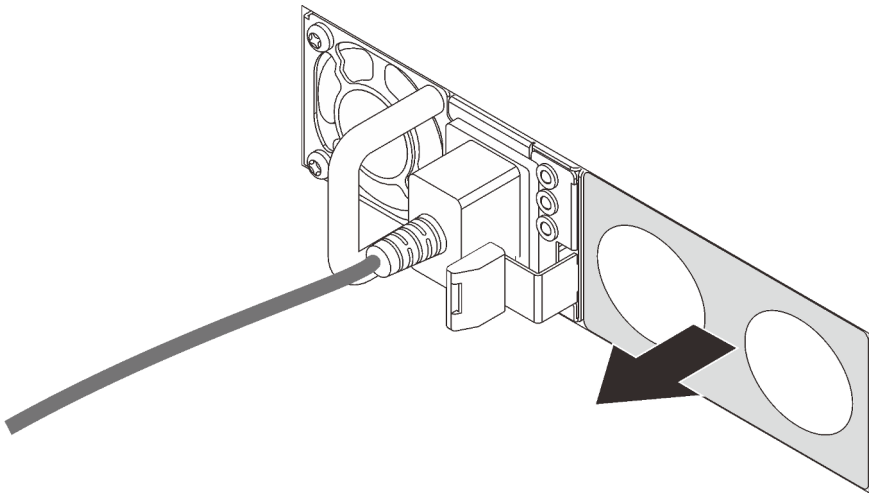

Figure 153. Hot-swap power supply filler removal

Step 3. Slide the new hot-swap power supply into the bay until it snaps into position.

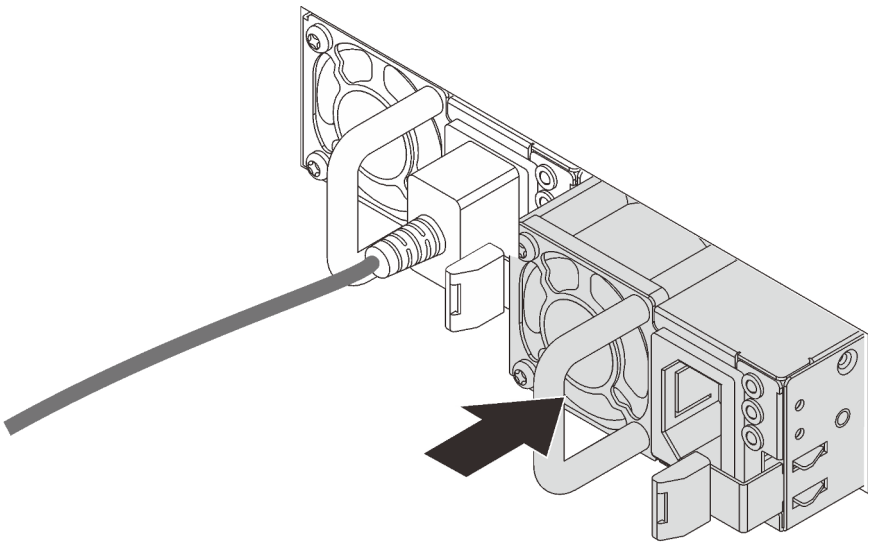

Figure 154. Hot-swap power supply installation

Demo video

Watch the procedure on YouTube

Install a hot-swap drive

Use this information to install a hot-swap drive.

	"**Read** the installation Guidelines" on page 134
	"**ATTENTION: Static Sensitive Device** Ground package before opening" on page 136

The following notes describe the type of drives that your server supports and other information that you must consider when you install a drive.

- Depending on your server models, your server supports the following drive types:
  - NVMe SSD
  - SAS/SATA SSD
  - SAS/SATA HDD

  Note: For the middle/rear drive cage with an NVMe backplane, only 7 mm NVMe drives (installed in the 15 mm-height drive trays) are supported. The 15 mm drives are not supported.

  For a list of supported drives, see:
  https://serverproven.lenovo.com/
- The drive bays are numbered to indicate the installation order (starting from number "0"). Follow the installation order when you install a drive. See "Front view" on page 17.

- You can mix drives of different types, different sizes, and different capacities in one system, but not in one RAID array. The following priority is recommended for installing the drives:
  - Drive type priority: NVMe SSD, SAS SSD, SATA SSD, SAS HDD, SATA HDD
  - Drive size priority: 2.5 inch, 3.5 inch
  - Drive capacity priority: the lowest capacity first
- The drives in a single RAID array must be the same type, same size, and same capacity.
- The type and number of supported drives vary by server model and backplane configuration. For more information, see "Drive bay configurations and requirements" on page 139.

Before installing a hot-swap drive:

1. If the drive bay has a drive filler installed, pinch the two tabs to remove the drive filler. Keep the drive filler in a safe place.

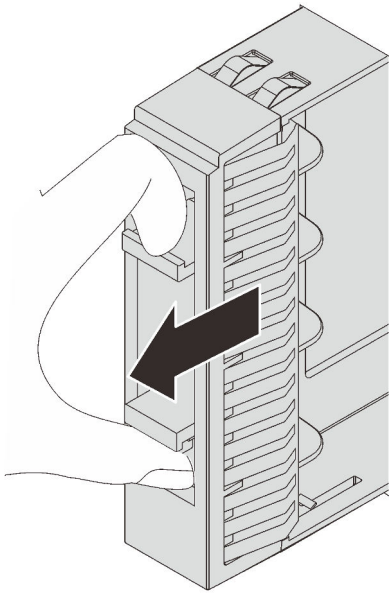

Figure 155. 2.5-inch drive filler removal

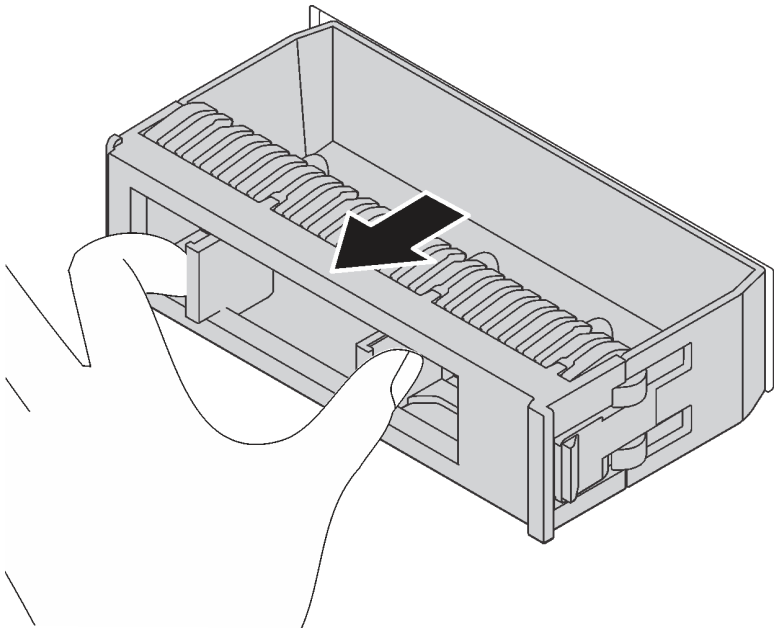

Figure 156. 3.5-inch drive filler removal

2. Touch the static-protective package that contains the new drive to any unpainted surface on the outside of the server. Then, take the new drive out of the package and place it on a static-protective surface.

To install a hot-swap drive, complete the following steps:

Watch the procedure. A video of the installation and removal process is available at YouTube: https://www.youtube.com/playlist?list=PLYV5R7hVcs-BYjgwMTzXbgbC6fhKRsCdR.

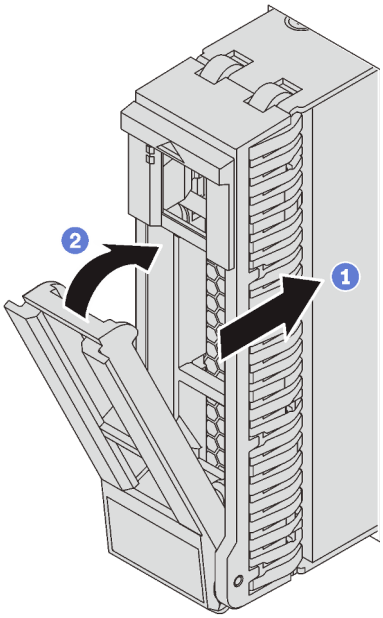

Figure 157. 2.5-inch hot-swap drive installation

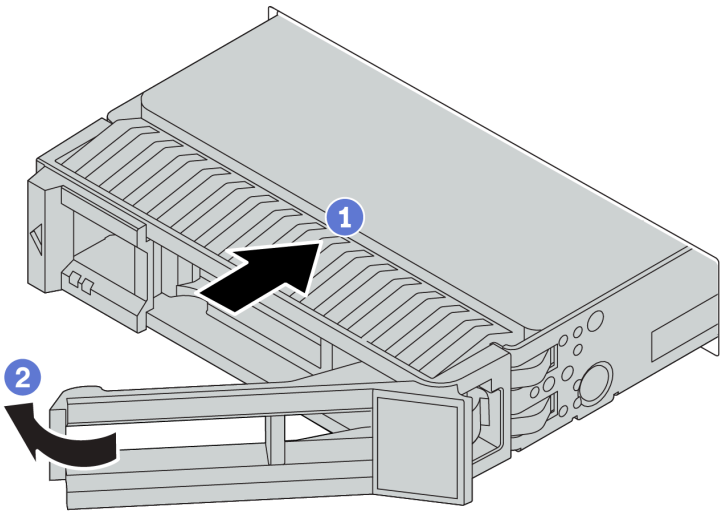

Figure 158. 3.5-inch hot-swap drive installation

Step 1. Ensure that the drive tray handle is in the open position. Slide the drive into the drive bay until it snaps into position.

Step 2. Close the drive tray handle to lock the drive in place.

Step 3. Check the drive status LED to verify that the drive is operating correctly.

- If the yellow drive status LED is lit continuously, that drive is faulty and must be replaced.
- If the green drive activity LED is flashing, the drive is being accessed.

Step 4. Continue to install additional hot-swap drives if necessary.

Demo video

Watch the procedure on YouTube

Install the server in a rack

To install the server in a rack, follow the instructions that are provided in the Rail Installation Kit for the rails on which the server will be installed.

Cable the server

Attach all external cables to the server. Typically, you will need to connect the server to a power source, to the data network, and to storage. In addition, you will need to connect the server to the management network.

Connect to power

Connect the server to power.

Connect to the network

Connect the server to the network.

Connect to storage

Connect the server to any storage devices.

Turn on the server

After the server performs a short self-test (power status LED flashes quickly) when connected to input power, it enters a standby state (power status LED flashes once per second).

The server can be turned on (power LED on) in any of the following ways:

- You can press the power button.
- The server can restart automatically after a power interruption.
- The server can respond to remote power-on requests sent to the Lenovo ThinkSystem System Manager.

For information about powering off the server, see "Turn off the server" on page 209.

Validate server setup

After powering up the server, make sure that the LEDs are lit and that they are green.

Turn off the server

The server remains in a standby state when it is connected to a power source, allowing the Lenovo ThinkSystem System Manager to respond to remote power-on requests. To remove all power from the server (power status LED off), you must disconnect all power cables.

To place the server in a standby state (power status LED flashes once per second):

Note: The Lenovo ThinkSystem System Manager can place the server in a standby state as an automatic response to a critical system failure.

- Start an orderly shutdown using the operating system (if supported by your operating system).
- Press the power button to start an orderly shutdown (if supported by your operating system).
- Press and hold the power button for more than 4 seconds to force a shutdown.

When in a standby state, the server can respond to remote power-on requests sent to the Lenovo ThinkSystem System Manager. For information about powering on the server, see "Turn on the server" on page 209.

Chapter 4. System configuration

Complete these procedures to configure your system.

Set network connection for the BMC

You can use the Lenovo ThinkSystem System Manager (TSM), a Web-based interface, to access the baseboard management controller (BMC) over your network. Before you access the BMC, you need to specify how the BMC will connect to the network.

Obtaining the IP address for the BMC

By default, the BMC will automatically search the DHCP server on the network to obtain an assigned IP address. Since there is no dedicated static IPv4 address, it is strongly recommended that you set a static IP address by using Setup Utility:

1. Start the server. When you see **<F1> System Setup**, press F1 to open Setup Utility.
2. Go to **Server Mgmt → BMC network configuration**. Specify a static IP address for the BMC.

To view the IP address, do the following steps:

1. Connect an Ethernet cable from the network to the BMC management Ethernet connector. If the management connector is unavailable, you can connect the server to the network through one of the Ethernet connectors on the OCP 3.0 Ethernet adapter. For the location of the two types of connectors, see "Rear view" on page 23.
2. Attach a monitor to the server.
3. Power on the server. The BMC IP address is displayed on the welcome page.

Logging into Lenovo ThinkSystem System Manager

After acquiring BMC IP address, you can log in to the Lenovo ThinkSystem System Manager over your network to manage BMC.

To log in to the Lenovo ThinkSystem System Manager:

1. Enter the BMC IP address in the Web browser. The login page is displayed.

   Note: TSM is accessible through standard Web browsers with HTTPS. For secure connection, TSM only supports HTTPS access. For example, enter *https://BMC IP address* in the Web browser.
2. On the login page, select the language, and enter the user name and password. The default user name and password for TSM are:
   - User name: USERID
   - Password: PASSW0RD (with a zero, not the letter O)

   Note: The default password must be changed during your initial login.

For detailed information on Lenovo ThinkSystem System Manager, see https://thinksystem.lenovofiles.com/help/topic/7Y00/bmc_user_guide.pdf.

Update the firmware

Several options are available to update the firmware for the server.

You can use the tools listed here to update the most current firmware for your server and the devices that are installed in the server.

Note: Lenovo typically releases firmware in bundles called UpdateXpress System Packs (UXSPs). To ensure that all of the firmware updates are compatible, you should update all firmware at the same time. If you are updating firmware for both the BMC and UEFI, update the firmware for BMC first.

Best practice related to updating firmware is available at the following location:

http://lenovopress.com/LP0656

Important terminology

- **In-band update**. The installation or update is performed using a tool or application within an operating system that is executing on the server's core CPU.
- **Out-of-band update**. The installation or update is performed by the BMC collecting the update and then directing the update to the target subsystem or device. Out-of-band updates have no dependency on an operating system executing on the core CPU. However, most out-of-band operations do not require the server to be in the S0 (Working) power state.
- **On-Target update.** The installation or update is initiated from an installed operating system executing on the target server itself.
- **Off-Target update**. The installation or update is initiated from a computing device interacting directly with the server's BMC.
- **UpdateXpress System Packs (UXSPs)**. UXSPs are bundled updates designed and tested to provide the interdependent level of functionality, performance, and compatibility. UXSPs are server machine-type specific and are built (with firmware and device driver updates) to support specific Windows Server, Red Hat Enterprise Linux (RHEL) and SUSE Linux Enterprise Server (SLES) operating system distributions. Machine-type-specific firmware-only UXSPs are also available.

See the following table to determine the best Lenovo tool to use for installing and setting up the firmware:

Note: The server UEFI settings for option ROM must be set to **UEFI** to update the firmware using Lenovo XClarity Essentials. For more information, see the following Tech Tip:

https://datacentersupport.lenovo.com/us/en/solutions/ht506118

Tool	In-band update	Out-of-band update	On-target update	Off-target update	Graphical user interface	Command-line interface	Supports UXSPs
Lenovo XClarity Provisioning Manager Limited to core system firmware only.	√			√	√		
Lenovo ThinkSystem System Manager Supports core system firmware and most advanced I/O option firmware updates		√		√	√	√	

Tool	In-band update	Out-of-band update	On-target update	Off-target update	Graphical user interface	Command-line interface	Supports UXSPs
Lenovo XClarity Essentials Bootable Media Creator Supports core system firmware and I/O firmware updates. You can update the Microsoft Windows operating system, but device drivers are not included on the bootable image	√				√	√	√
Lenovo XClarity Administrator Supports core system firmware and I/O firmware updates	√[1]	√[2]		√	√		

Notes:

1. For I/O firmware updates.
2. For BMC and UEFI firmware updates.

The latest firmware can be found at the following site:

http://datacentersupport.lenovo.com/products/servers/thinksystem/sr655/7Y00/downloads

- **Lenovo XClarity Provisioning Manager**

  From Lenovo XClarity Provisioning Manager, you can update the BMC firmware, the UEFI firmware, and the Lenovo XClarity Provisioning Manager software.

  Note: By default, the Lenovo XClarity Provisioning Manager Graphical User Interface is displayed when you press the key specified in the on-screen instructions. If you have changed that default to be the text-based system setup, you can bring up the Graphical User Interface from the text-based system setup interface.

  For additional information about using Lenovo XClarity Provisioning Manager to update firmware, see:

  "Firmware Update" section in the LXPM documentation compatible with your server at https://pubs.lenovo.com/lxpm-overview/

- **Lenovo ThinkSystem System Manager**

  From Lenovo ThinkSystem System Manager, you can update the system firmware, the backplane firmware, and the power supply firmware.

  If you need to install a specific update, you can use Lenovo ThinkSystem System Manager for a specific server.

  Specific details about updating firmware using Lenovo ThinkSystem System Manager are available at:

  https://thinksystem.lenovofiles.com/help/topic/7Y00/bmc_user_guide.pdf

- **Lenovo XClarity Essentials Bootable Media Creator**

  You can use Lenovo XClarity Essentials Bootable Media Creator to create bootable media that is suitable for applying firmware updates.

  You can obtain Lenovo XClarity Essentials BoMC from the following location:

  https://datacentersupport.lenovo.com/solutions/lnvo-bomc

- **Lenovo XClarity Administrator**

  If you are managing multiple servers using the Lenovo XClarity Administrator, you can update firmware for all managed servers through that interface. Firmware management is simplified by assigning firmware-compliance policies to managed endpoints. When you create and assign a compliance policy to managed endpoints, Lenovo XClarity Administrator monitors changes to the inventory for those endpoints and flags any endpoints that are out of compliance.

  Specific details about updating firmware using Lenovo XClarity Administrator are available at:

  https://sysmgt.lenovofiles.com/help/topic/com.lenovo.lxca.doc/update_fw.html

Configure the firmware

You can configure the management processor for the server through the BMC Web interface (Lenovo ThinkSystem System Manager) or through the command-line interface.

For information about configuring the server using Lenovo ThinkSystem System Manager, see:

https://thinksystem.lenovofiles.com/help/topic/7Y00/bmc_user_guide.pdf

Memory configuration

Memory performance depends on several variables, such as memory mode, memory speed, memory ranks, memory population and processor.

More information about optimizing memory performance and configuring memory is available at the Lenovo Press Website:

https://lenovopress.com/servers/options/memory

In addition, you can take advantage of a memory configurator, which is available at the following site:

http://1config.lenovo.com/#/memory_configuration

For specific information about the required installation order of memory modules in your server based on the system configuration and memory mode that you are implementing, see "Memory module installation rules" on page 137.

RAID configuration

Using a Redundant Array of Independent Disks (RAID) to store data remains one of the most common and cost-efficient methods to increase server's storage performance, availability, and capacity.

RAID increases performance by allowing multiple drives to process I/O requests simultaneously. RAID can also prevent data loss in case of a drive failure by reconstructing (or rebuilding) the missing data from the failed drive using the data from the remaining drives.

RAID array (also known as RAID drive group) is a group of multiple physical drives that uses a certain common method to distribute data across the drives. A virtual drive (also known as virtual disk or logical drive) is a partition in the drive group that is made up of contiguous data segments on the drives. Virtual drive is presented up to the host operating system as a physical disk that can be partitioned to create OS logical drives or volumes.

An introduction to RAID is available at the following Lenovo Press Website:

https://lenovopress.com/lp0578-lenovo-raid-introduction

Detailed information about RAID management tools and resources is available at the following Lenovo Press Website:

https://lenovopress.com/lp0579-lenovo-raid-management-tools-and-resources

Deploy the operating system

Two methods are available for deploying an operating system on the server.

Available operating systems

- Microsoft Windows Server
- VMware ESXi
- Red Hat Enterprise Linux
- SUSE Linux Enterprise Server
- Win10 Pro and Win11 Pro for Workstations

Complete list of available operating systems: https://lenovopress.lenovo.com/osig.

Tool-based deployment

Lenovo XClarity Provisioning Manager

https://sysmgt.lenovofiles.com/help/topic/lxpm_frontend/lxpm_product_page.html

Manual deployment

If you cannot access the above tools, follow the instructions below, download the corresponding *OS Installation Guide*, and deploy the operating system manually by referring to the guide.

1. Go to https://datacentersupport.lenovo.com/solutions/server-os.
2. Select an operating system from the navigation pane and click **Resources**.
3. Locate the “OS Install Guides” area and click the installation instructions. Then, follow the instructions to complete the operation system deployment task.

Back up the server configuration

After setting up the server or making changes to the configuration, it is a good practice to make a complete backup of the server configuration.

Make sure that you create backups for the following server components:

- **Management processor**

  You can back up the management processor configuration through the BMC interface, Lenovo ThinkSystem System Manager. For details about backing up the management processor configuration, see: https://thinksystem.lenovofiles.com/help/topic/7Y00/bmc_user_guide.pdf.

- **Operating system**

  Use your own operating-system and user-data backup methods to back up the operating system and user data for the server.

Chapter 5. Resolving installation issues

Use this information to resolve issues that you might have when setting up your system.

Use the information in this section to diagnose and resolve problems that you might encounter during the initial installation and setup of your server.

Server does not power on

Complete the following steps until the problem is resolved:

1. Make sure that the ac power is applied correctly to the server. Make sure that the ac power cords are correctly connected to the server and to a working electrical outlet.
2. Check the event log for any events related to the server not powering on.
3. Check for any LEDs that are flashing amber.
4. Check the power LED on the system board.
5. Reseat the power supply.
6. Replace the power supply.

The server immediately displays the POST Event Viewer when it is turned on

Complete the following steps until the problem is solved.

1. Check BMC event logs and resolve the errors in the event logs.
2. Make sure the UEFI firmware and BMC firmware are the latest version.
3. Revert the system to the minimum configuration.
4. Correct any errors that are indicated by the light path diagnostics LEDs.
5. Make sure that the server supports all the processors and that the processors match in speed and cache size.

   You can view processor details from system setup.

   To determine if the processor is supported for the server, see https://serverproven.lenovo.com/.
6. (Trained technician only) Make sure that the processor is seated correctly.
7. Replace the following components one at a time, in the order shown, restarting the server each time:
   a. (Trained technician only) Processor
   b. (Trained technician only) System board

Embedded hypervisor is not in the boot list

Complete the following steps until the problem is solved.

1. If the server has been installed, moved, or serviced recently, or if this is the first time the embedded hypervisor is being used, make sure that the device is connected properly and that there is no physical damage to the connectors.
2. See the documentation that comes with the optional embedded hypervisor flash device for setup and configuration information.
3. Check https://serverproven.lenovo.com/ to validate that the embedded hypervisor device is supported for the server.
4. Make sure that the embedded hypervisor device is listed in the list of available boot options. From the management controller user interface, click **Server Configuration → Boot Options**.

   For information about accessing the management controller user interface, see the TSM documentation:

   https://thinksystem.lenovofiles.com/help/topic/7Y00/bmc_user_guide.pdf
5. Check http://datacentersupport.lenovo.com for any tech tips (service bulletins) related to the embedded hypervisor and the server.
6. Make sure that other software works on the server to ensure that it is working properly.

Server cannot recognize a hard disk drive

Complete the following steps until the problem is solved.

1. Observe the associated yellow hard disk drive status LED. If the LED is lit, it indicates a drive fault.
2. If the LED is lit, remove the drive from the bay, wait 45 seconds, and reinsert the drive, making sure that the drive assembly connects to the hard disk drive backplane.
3. Observe the associated green hard disk drive activity LED and the yellow status LED:
   - If the green activity LED is flashing and the yellow status LED is not lit, the drive is recognized by the controller and is working correctly. Run the diagnostics tests for the hard disk drives. When you start a server and press F1, the Lenovo XClarity Provisioning Manager interface is displayed by default. You can perform hard disk drive diagnostics from this interface. From the Diagnostic page, click **Run Diagnostic → HDD test/Disk Drive Test**.
   - If the green activity LED is flashing and the yellow status LED is flashing slowly, the drive is recognized by the controller and is rebuilding.
   - If neither LED is lit or flashing, check the hard disk drive backplane.
   - If the green activity LED is flashing and the yellow status LED is lit, replace the drive. If the activity of the LEDs remains the same, go to step Hard disk drive problems. If the activity of the LEDs changes, return to step 1.
4. Make sure that the hard disk drive backplane is correctly seated. When it is correctly seated, the drive assemblies correctly connect to the backplane without bowing or causing movement of the backplane.
5. Reseat the backplane power cable and repeat steps 1 through 3.
6. Reseat the backplane signal cable and repeat steps 1 through 3.
7. Suspect the backplane signal cable or the backplane:
   - Replace the affected backplane signal cable.
   - Replace the affected backplane.
8. Run the diagnostics tests for the hard disk drives. When you start a server and press the key specified in the on-screen instructions, the Lenovo XClarity Provisioning Manager interface is displayed by default. You can perform hard disk drive diagnostics from this interface. From the Diagnostic page, click **Run Diagnostic → HDD test/Disk Drive Test**.

   Based on those tests:

- If the adapter passes the test but the drives are not recognized, replace the backplane signal cable and run the tests again.
- Replace the backplane.
- If the adapter fails the test, disconnect the backplane signal cable from the adapter and run the tests again.
- If the adapter fails the test, replace the adapter.

Displayed system memory less than installed physical memory

Complete the following steps until the problem is resolved:

Note: Each time you install or remove a DIMM, you must disconnect the server from the power source; then, wait 10 seconds before restarting the server.

1. Check and make sure that:
   - No error LEDs are lit on the operator information panel.
   - No DIMM error LEDs are lit on the system board.
   - Memory mirrored channel does not account for the discrepancy.
   - The memory modules are seated correctly.
   - You have installed the correct type of memory.
   - If you changed the memory, you updated the memory configuration in the Setup utility.
   - All banks of memory are enabled. The server might have automatically disabled a memory bank when it detected a problem, or a memory bank might have been manually disabled.
   - There is no memory mismatch when the server is at the minimum memory configuration.
2. Check memory module event logs and run memory module diagnostics:
   a. Identify the failing memory module, and install the failing memory module in a different slot.
   b. Restart the server and check the memory event logs. If the problem is related to the memory module slot, replace the failing memory module.
3. Reseat the DIMMs, and then restart the server.
4. Run memory diagnostics. When you start a server and press the key specified in the on-screen instructions, the Lenovo XClarity Provisioning Manager interface is displayed by default. You can perform memory diagnostics from this interface. From the Diagnostic page, click **Run Diagnostic → Memory test**.
5. Check the POST error log:
   - If a DIMM was disabled by a systems-management interrupt (SMI), replace the DIMM.
   - If a DIMM was disabled by the user or by POST, reseat the DIMM; then, run the Setup utility and enable the DIMM.
6. Reseat the DIMM.
7. Restart the server.

A Lenovo optional device that was just installed does not work

1. Make sure that:
   - The device is supported for the server (see https://serverproven.lenovo.com/).
   - You followed the installation instructions that came with the device and the device is installed correctly.
   - You have not loosened any other installed devices or cables.

- You updated the configuration information in system setup. When you start a server and press F1 to display the system setup interface. Whenever memory or any other device is changed, you must update the configuration.

2. Reseat the device that you just installed.
3. Replace the device that you just installed.

Voltage system board fault is displayed in the event log

Complete the following steps until the problem is solved.

1. Check the BMC event logs and resolve the errors described in the event logs according to *ThinkSystem System Manager User Guide*. See https://thinksystem.lenovofiles.com/help/topic/7Y00/bmc_user_guide.pdf.
2. Update the UEFI firmware and BMC firmware to the latest version.
3. Revert the system to the minimum configuration. See "Specifications" on page 5 for the minimally required number of processors and DIMMs.
4. Restart the system.
   - If the system restarts, add each of the items that you removed one at a time, restarting the system each time, until the error occurs. Replace the item for which the error occurs.
   - If the system does not restart, suspect the system board.

Appendix A. Getting help and technical assistance

If you need help, service, or technical assistance or just want more information about Lenovo products, you will find a wide variety of sources available from Lenovo to assist you.

On the World Wide Web, up-to-date information about Lenovo systems, optional devices, services, and support are available at:

http://datacentersupport.lenovo.com

Note: IBM is Lenovo's preferred service provider for ThinkSystem.

Before you call

Before you call, there are several steps that you can take to try and solve the problem yourself. If you decide that you do need to call for assistance, gather the information that will be needed by the service technician to more quickly resolve your problem.

Attempt to resolve the problem yourself

You can solve many problems without outside assistance by following the troubleshooting procedures that Lenovo provides in the online help or in the Lenovo product documentation. The Lenovo product documentation also describes the diagnostic tests that you can perform. The documentation for most systems, operating systems, and programs contains troubleshooting procedures and explanations of error messages and error codes. If you suspect a software problem, see the documentation for the operating system or program.

You can find the product documentation for your ThinkSystem products at the following location:

You can find the product documentation for your ThinkSystem products at https://pubs.lenovo.com/

You can take these steps to try to solve the problem yourself:

- Check all cables to make sure that they are connected.
- Check the power switches to make sure that the system and any optional devices are turned on.
- Check for updated software, firmware, and operating-system device drivers for your Lenovo product. The Lenovo Warranty terms and conditions state that you, the owner of the Lenovo product, are responsible for maintaining and updating all software and firmware for the product (unless it is covered by an additional maintenance contract). Your service technician will request that you upgrade your software and firmware if the problem has a documented solution within a software upgrade.
- If you have installed new hardware or software in your environment, check https://serverproven.lenovo.com/ to make sure that the hardware and software are supported by your product.
- Go to http://datacentersupport.lenovo.com and check for information to help you solve the problem.
  - Check the Lenovo forums at https://forums.lenovo.com/t5/Datacenter-Systems/ct-p/sv_eg to see if someone else has encountered a similar problem.

Gathering information needed to call Support

If you believe that you require warranty service for your Lenovo product, the service technicians will be able to assist you more efficiently if you prepare before you call. You can also see http://datacentersupport.lenovo.com/warrantylookup for more information about your product warranty.

Gather the following information to provide to the service technician. This data will help the service technician quickly provide a solution to your problem and ensure that you receive the level of service for which you might have contracted.

- Hardware and Software Maintenance agreement contract numbers, if applicable
- Machine type number (Lenovo 4-digit machine identifier)
- Model number
- Serial number
- Current system UEFI and firmware levels
- Other pertinent information such as error messages and logs

As an alternative to calling Lenovo Support, you can go to https://support.lenovo.com/servicerequest to submit an Electronic Service Request. Submitting an Electronic Service Request will start the process of determining a solution to your problem by making the pertinent information available to the service technicians. The Lenovo service technicians can start working on your solution as soon as you have completed and submitted an Electronic Service Request.

Collecting service data

To clearly identify the root cause of a server issue or at the request of Lenovo Support, you might need collect service data that can be used for further analysis. Service data includes information such as event logs and hardware inventory.

Service data can be collected through the following tools:

- **Lenovo XClarity Provisioning Manager**

  Use the Collect Service Data function of Lenovo XClarity Provisioning Manager to collect system service data. You can collect existing system log data or run a new diagnostic to collect new data.

- **Lenovo ThinkSystem System Manager**

  You can use the BMC Web user interface or the CLI to collect service data for the server. The file can be saved and sent to Lenovo Support.

  – For more information about using the Web interface to collect service data, see https://thinksystem.lenovofiles.com/help/topic/7Y00/bmc_user_guide.pdf.

Contacting Support

You can contact Support to obtain help for your issue.

You can receive hardware service through a Lenovo Authorized Service Provider. To locate a service provider authorized by Lenovo to provide warranty service, go to https://datacentersupport.lenovo.com/serviceprovider and use filter searching for different countries. For Lenovo support telephone numbers, see https://datacentersupport.lenovo.com/supportphonelist for your region support details.

Appendix B. Notices

Lenovo may not offer the products, services, or features discussed in this document in all countries. Consult your local Lenovo representative for information on the products and services currently available in your area.

Any reference to a Lenovo product, program, or service is not intended to state or imply that only that Lenovo product, program, or service may be used. Any functionally equivalent product, program, or service that does not infringe any Lenovo intellectual property right may be used instead. However, it is the user's responsibility to evaluate and verify the operation of any other product, program, or service.

Lenovo may have patents or pending patent applications covering subject matter described in this document. The furnishing of this document is not an offer and does not provide a license under any patents or patent applications. You can send inquiries in writing to the following:

Lenovo (United States), Inc.
8001 Development Drive
Morrisville, NC 27560
U.S.A.
Attention: Lenovo Director of Licensing

LENOVO PROVIDES THIS PUBLICATION “AS IS” WITHOUT WARRANTY OF ANY KIND, EITHER EXPRESS OR IMPLIED, INCLUDING, BUT NOT LIMITED TO, THE IMPLIED WARRANTIES OF NON-INFRINGEMENT, MERCHANTABILITY OR FITNESS FOR A PARTICULAR PURPOSE. Some jurisdictions do not allow disclaimer of express or implied warranties in certain transactions, therefore, this statement may not apply to you.

This information could include technical inaccuracies or typographical errors. Changes are periodically made to the information herein; these changes will be incorporated in new editions of the publication. Lenovo may make improvements and/or changes in the product(s) and/or the program(s) described in this publication at any time without notice.

The products described in this document are not intended for use in implantation or other life support applications where malfunction may result in injury or death to persons. The information contained in this document does not affect or change Lenovo product specifications or warranties. Nothing in this document shall operate as an express or implied license or indemnity under the intellectual property rights of Lenovo or third parties. All information contained in this document was obtained in specific environments and is presented as an illustration. The result obtained in other operating environments may vary.

Lenovo may use or distribute any of the information you supply in any way it believes appropriate without incurring any obligation to you.

Any references in this publication to non-Lenovo Web sites are provided for convenience only and do not in any manner serve as an endorsement of those Web sites. The materials at those Web sites are not part of the materials for this Lenovo product, and use of those Web sites is at your own risk.

Any performance data contained herein was determined in a controlled environment. Therefore, the result obtained in other operating environments may vary significantly. Some measurements may have been made on development-level systems and there is no guarantee that these measurements will be the same on generally available systems. Furthermore, some measurements may have been estimated through extrapolation. Actual results may vary. Users of this document should verify the applicable data for their specific environment.

Trademarks

LENOVO, THINKSYSTEM, and XCLARITY are trademarks of Lenovo.

AMD and EPYC are trademarks of AMD Corporation in United States. Microsoft and Windows are trademarks of the Microsoft group of companies. Linux is a registered trademark of Linus Torvalds. All other trademarks are the property of their respective owners. © 2024 Lenovo.

Important notes

Processor speed indicates the internal clock speed of the microprocessor; other factors also affect application performance.

CD or DVD drive speed is the variable read rate. Actual speeds vary and are often less than the possible maximum.

When referring to processor storage, real and virtual storage, or channel volume, KB stands for 1 024 bytes, MB stands for 1 048 576 bytes, and GB stands for 1 073 741 824 bytes.

When referring to hard disk drive capacity or communications volume, MB stands for 1 000 000 bytes, and GB stands for 1 000 000 000 bytes. Total user-accessible capacity can vary depending on operating environments.

Maximum internal hard disk drive capacities assume the replacement of any standard hard disk drives and population of all hard-disk-drive bays with the largest currently supported drives that are available from Lenovo.

Maximum memory might require replacement of the standard memory with an optional memory module.

Each solid-state memory cell has an intrinsic, finite number of write cycles that the cell can incur. Therefore, a solid-state device has a maximum number of write cycles that it can be subjected to, expressed as `total bytes written` (TBW). A device that has exceeded this limit might fail to respond to system-generated commands or might be incapable of being written to. Lenovo is not responsible for replacement of a device that has exceeded its maximum guaranteed number of program/erase cycles, as documented in the Official Published Specifications for the device.

Lenovo makes no representations or warranties with respect to non-Lenovo products. Support (if any) for the non-Lenovo products is provided by the third party, not Lenovo.

Some software might differ from its retail version (if available) and might not include user manuals or all program functionality.

ASHRAE class compliance information

Your server complies with ASHRAE class A2 specifications. System performance may be impacted when operating temperature is outside ASHRAE A2 specification.

- Air temperature:
  - Operating:
    - ASHRAE class A2: 10–35°C (50–95°F); when the altitude exceeds 900 m (2953 ft), the maximum ambient temperature value decreases by 1°C (1.8°F) with every 300 m (984 ft) of altitude increase.
    - ASHRAE class A3: 5–40°C (41–104°F); when the altitude exceeds 900 m (2953 ft), the maximum ambient temperature value decreases by 1°C (1.8°F) with every 175 m (574 ft) of altitude increase.

    - ASHRAE class A4: 5–45°C (41–113°F); when the altitude exceeds 900 m (2953 ft), the maximum ambient temperature value decreases by 1°C (1.8°F) with every 125 m (410 ft) of altitude increase.
  - Server off: 5–45°C (41–113°F)
  - Shipping or storage: -40–60°C (-40–140°F)
- Maximum altitude: 3050 m (10 000 ft)
- Relative humidity (non-condensing):
  - Operating:
    - ASHRAE class A2: 8%–80%; maximum dew point: 21°C (70°F)
    - ASHRAE class A3: 8%–85%; maximum dew point: 24°C (75°F)
    - ASHRAE class A4: 8%–90%; maximum dew point: 24°C (75°F)
  - Shipping or storage: 8%–90%

Depending on the hardware configuration, some server models comply with ASHRAE class A3 and class A4 specifications. To comply with ASHRAE class A3 and class A4 specifications, the server model must meet the following requirements at the same time:

- No NVMe drive, M.2 drive, middle bay, rear bay, GPU adapter, Ethernet adapter of 10 GbE or higher, or PCIe SSD adapter is installed.
- Required processor TDP for supported server models:
  - TDP ≤ 120 watts for server model with 24 x 2.5-inch front drive bays
  - TDP ≤ 155 watts for server model with 8 x 3.5-inch, 8 x 2.5-inch, or 16 x 2.5-inch front drive bays

Telecommunication regulatory statement

This product may not be certified in your country for connection by any means whatsoever to interfaces of public telecommunications networks. Further certification may be required by law prior to making any such connection. Contact a Lenovo representative or reseller for any questions.

Electronic emission notices

When you attach a monitor to the equipment, you must use the designated monitor cable and any interference suppression devices that are supplied with the monitor.

Additional electronic emissions notices are available at:

https://pubs.lenovo.com/important_notices/

Taiwan Region BSMI RoHS declaration

單元 Unit	限用物質及其化學符號 Restricted substances and its chemical symbols					
	鉛Lead (PB)	汞Mercury (Hg)	鎘Cadmium (Cd)	六價鉻 Hexavalent chromium (Cr^{+6})	多溴聯苯 Polybrominated biphenyls (PBB)	多溴二苯醚 Polybrominated diphenyl ethers (PBDE)
機架	○	○	○	○	○	○
外部蓋板	○	○	○	○	○	○
機械組合件	–	○	○	○	○	○
空氣傳動設備	–	○	○	○	○	○
冷卻組合件	–	○	○	○	○	○
內存模組	–	○	○	○	○	○
處理器模組	–	○	○	○	○	○
電纜組合件	–	○	○	○	○	○
電源供應器	–	○	○	○	○	○
儲備設備	–	○	○	○	○	○
電路卡	–	○	○	○	○	○
光碟機	–	○	○	○	○	○

備考1.〝超出0.1 wt %〞及〝超出0.01 wt %〞係指限用物質之百分比含量超出百分比含量基準值。

Note1 : “exceeding 0.1wt%” and “exceeding 0.01 wt%” indicate that the percentage content of the restricted substance exceeds the reference percentage value of presence condition.

備考2.〝○〞係指該項限用物質之百分比含量未超出百分比含量基準值。

Note2 : “○”indicates that the percentage content of the restricted substance does not exceed the percentage of reference value of presence.

備考3.〝-〞係指該項限用物質為排除項目。

Note3 : The “-“ indicates that the restricted substance corresponds to the exemption.

Taiwan Region import and export contact information

Contacts are available for Taiwan Region import and export information.

委製商/進口商名稱: 台灣聯想環球科技股份有限公司
進口商地址: 台北市南港區三重路 66 號 8 樓
進口商電話: 0800-000-702

Index

L

M

N

P

Q

R

S

T

U

V

W

Lenovo