ThinkSystem SR670
Maintenance Manual

Machine Types: 7Y36, 7Y37, and 7Y38

Note

Before using this information and the product it supports, be sure to read and understand the safety information and the safety instructions, which are available at:
https://pubs.lenovo.com/safety_documentation/

In addition, ensure that you are familiar with the terms and conditions of the Lenovo warranty for your server, which can be found at:
http://datacentersupport.lenovo.com/warrantylookup

Nineth Edition (November 2021)

© Copyright Lenovo 2018, 2021.

LIMITED AND RESTRICTED RIGHTS NOTICE: If data or software is delivered pursuant to a General Services Administration “GSA” contract, use, reproduction, or disclosure is subject to restrictions set forth in Contract No. GS-35F-05925.

Contents

Contents i

Safety iii

Safety inspection checklist iv

Chapter 1. Introduction 1

Identifying your server 1
XClarity Controller network (XCC) access label. . . . 2
Quick response code 3
Specifications 4
Particulate contamination 8
Firmware updates 9
Tech Tips 12
Security advisories 12
Power on the server 12
Power off the server 13

Chapter 2. Server components 15

Front view 15
Operator panel 18
Rear view 20
Power Supply LEDs 21
System board components 22
Jumper settings. 24
Switch blocks 25
Internal cable routing. 27
Internal cable routing guides 28
I/O expansion cage cable routing 31
3-slot PCIe expansion cage 1 cable routing . . 35
4-slot PCIe expansion cage 1 cable routing . . 38
Video and USB cable routing 41
3-slot PCIe expansion cage 2 cable routing . . 44
4-slot PCIe expansion cage 2 cable routing . . 47
Drive cage cable routing (onboard RAID controller) 50
RAID adapter cable routing 53
Fan cage cable routing 57
Parts list. 58
Power cords 62

Chapter 3. Hardware replacement procedures. 63

Installation Guidelines 63
System reliability guidelines 64
Handling static-sensitive devices 64
Shipping bracket replacement 66
Remove the shipping bracket 66
Install the shipping bracket 66
Top cover replacement 67
Remove the top cover 67
Install the top cover 69
Air baffle replacement 70
Remove the air baffle 71
Install the air baffle 72
DIMM replacement 73
Remove a DIMM. 73
Memory module installation 74
System fan replacement 79
Remove a system fan. 79
Install a system fan. 80
System fan cage replacement 81
Remove the system fan cage. 81
Install the system fan cage. 84
I/O expansion cage replacement 86
Remove the I/O expansion cage 86
Install the I/O expansion cage 89
PCIe adapter replacement. 91
Remove a PCIe adapter from the I/O expansion cage 91
Install a PCIe adapter in the I/O expansion cage 93
RAID adapter replacement 95
Remove a RAID adapter from the I/O expansion cage 95
Install a RAID adapter in the I/O expansion cage 97
RAID 930-8i supercap replacement 100
Remove the RAID 930-8i supercap 100
Remove the RAID 930-8i supercap retention bracket 102
Install a RAID 930-8i supercap retention bracket 104
Install the RAID 930-8i supercap 106
Front operator panel replacement. 108
Remove the operator panel 108
Install the operator panel 109
Management port replacement. 110
Remove the management port 111
Install the management port 112
PCIe expansion cage replacement 113
Remove the PCIe expansion cage. 113
Install the PCIe expansion cage. 116
GPU adapter replacement. 120
Remove a FHFL GPU adapter 120

© Copyright Lenovo 2018, 2021

Remove a FHHL GPU adapter 122
Install a FHFL GPU adapter 123
Install a FHHL GPU adapter 125
AMD Radeon Instinct MI25 GPU adapter replacement 127
Remove an AMD Radeon Instinct MI25 GPU adapter 127
Install an AMD Radeon Instinct MI25 GPU adapter 130
Expansion cage card replacement 133
Remove an expansion cage card 133
Install an expansion cage card 135
Drive cage replacement. 137
Remove the drive cage 137
Install the drive cage 138
Hard drive backplane replacement 139
Remove the hard-drive backplane 139
Install the hard drive backplane 141
Hard disk drive replacement 142
Remove a hard disk drive 142
Install a hot-swap drive 143
M.2 backplane and M.2 drive replacement 144
Remove the M.2 backplane and M.2 drive. . . . 144
Adjust the retainer on the M.2 backplane . . . 146
Install the M.2 backplane and M.2 drive. . . . 146
CMOS battery replacement 149
Remove the system battery (CR2032) 149
Install the system battery (CR2032) 151
Serial port replacement 153
Remove the serial port 153
Install the serial port 154
Hot-swap power supply replacement 156
Remove a hot-swap power supply. 156
Install a hot-swap power supply 160
TPM card replacement (for Chinese Mainland only) 163
Remove the TPM card (for Chinese Mainland only) 163
Install the TPM card (for Chinese Mainland only) 165
Rack latch replacement. 167
Remove a rack mounting bracket 167
Install a rack mounting bracket 168
Processor and heat sink replacement 169
Remove a processor and heat sink 169
Install a processor and heat sink 172
System board replacement 177
Remove the system board 177
Install the system board 179
Update the machine type and serial number 181
Enable TPM 183
Enable UEFI Secure Boot 186

Chapter 4. Problem determination 189

Event logs 189
General problem determination procedures 190
Resolving suspected power problems 191
Resolving suspected Ethernet controller problems 191
Troubleshooting by symptom 192
Power on and power off problems 192
Memory problems 194
Hard disk drive problems 195
GPU performance problems 197
PCIe cabling or expansion cage configuration problems 197
Monitor and video problems 198
Keyboard, mouse, or USB-device problems 199
Optional-device problems 200
Serial-device problems 201
Intermittent problems. 202
Power problems. 203
Network problems 203
Observable problems. 204
Software problems. 206

Chapter 5. PCIe power brake 207

Appendix A. GPU adapter population rules and processor mapping 209

GPU processor mapping and adapter population rules (3-slot PCIe expansion cage) 209
GPU processor mapping and adapter population rules (4-slot PCIe expansion cage) 210

Appendix B. Getting help and technical assistance 213

Before you call 213
Collecting service data 214
Contacting Support 215

Appendix C. Notices. 217

Trademarks 218
Important notes 218
Telecommunication regulatory statement. 218
Electronic emission notices 219
Taiwan BSMI RoHS declaration. 219
Taiwan import and export contact information . . . 219

Index 221

Safety

Before installing this product, read the Safety Information.

قبل تركيب هذا المنتج، يجب قراءة الملاحظات الآمنية

Antes de instalar este produto, leia as Informações de Segurança.

在安装本产品之前，请仔细阅读 Safety Information （安全信息）。

安裝本產品之前，請先閱讀「安全資訊」。

Prije instalacije ovog produkta obavezno pročitajte Sigurnosne Upute.

Před instalací tohoto produktu si přečtěte příručku bezpečnostních instrukcí.

Læs sikkerhedsforskrifterne, før du installerer dette produkt.

Lees voordat u dit product installeert eerst de veiligheidsvoorschriften.

Ennen kuin asennat tämän tuotteen, lue turvaohjeet kohdasta Safety Information.

Avant d'installer ce produit, lisez les consignes de sécurité.

Vor der Installation dieses Produkts die Sicherheitshinweise lesen.

Πριν εγκαταστήσετε το προϊόν αυτό, διαβάστε τις πληροφορίες ασφάλειας (safety information).

לפני שתתקינו מוצר זה, קראו את הוראות הבטיחות.

A termék telepítése előtt olvassa el a Biztonsági előírásokat!

Prima di installare questo prodotto, leggere le Informazioni sulla Sicurezza.

製品の設置の前に、安全情報をお読みください。

본 제품을 설치하기 전에 안전 정보를 읽으십시오.

Пред да се инсталира овој продукт, прочитајте информацијата за безбедност.

Les sikkerhetsinformasjonen (Safety Information) før du installerer dette produktet.

Przed zainstalowaniem tego produktu, należy zapoznać się z książką "Informacje dotyczące bezpieczeństwa" (Safety Information).

Antes de instalar este produto, leia as Informações sobre Segurança.

Перед установкой продукта прочтите инструкции по технике безопасности.

© Copyright Lenovo 2018, 2021

Pred inštaláciou tohto zariadenia si pečítaje Bezpečnostné predpisy.

Pred namestitvijo tega proizvoda preberite Varnostne informacije.

Antes de instalar este producto, lea la información de seguridad.

Läs säkerhetsinformationen innan du installerar den här produkten.

ཐོན་རྫས་འདི་བདེ་སྤྱོད་མ་བྱས་གོང་། ་སྐོར་གྱི་ཡིད་གཟབ་
བྱ་འདྲ་མིན་ཡོད་པའི་འོད་སྡེར་བལྟ་དགོས།

Bu ürünü kurmadan önce güvenlik bilgilerini okuyun.

مەزكۇر مەھسۇلاتنى ئورنىتىشتىن بۇرۇن بىخەتەرلىك ئۇچۇرلىرىنى ئوقۇپ چىقىڭ.

Youq mwngz yungh canjbinj neix gaxgonq, itdingh aeu doeg aen
canjbinj soengq cungj vahgangj ancien siusik.

Safety inspection checklist

Use the information in this section to identify potentially unsafe conditions with your server. As each machine was designed and built, required safety items were installed to protect users and service technicians from injury.

1. The product is not suitable for use at visual display workplaces according to §2 of the Workplace Regulations.
2. The set-up of the server is made in the server room only.

CAUTION:
This equipment must be installed or serviced by trained personnel, as defined by the NEC, IEC 62368-1 & IEC 60950-1, the standard for Safety of Electronic Equipment within the Field of Audio/Video, Information Technology and Communication Technology. Lenovo assumes you are qualified in the servicing of equipment and trained in recognizing hazards energy levels in products. Access to the equipment is by the use of a tool, lock and key, or other means of security, and is controlled by the authority responsible for the location.

Important: Electrical grounding of the server is required for operator safety and correct system function. Proper grounding of the electrical outlet can be verified by a certified electrician.

Use the following checklist to verify that there are no potentially unsafe conditions:

1. Make sure that the power is off and the power cord is disconnected.
2. Check the power cord.
   - Make sure that the third-wire ground connector is in good condition. Use a meter to measure third-wire ground continuity for 0.1 ohm or less between the external ground pin and the frame ground.
   - Make sure that the power cord is the correct type.

     To view the power cords that are available for the server:

     a. Go to:

        http://dcsc.lenovo.com/#/

     b. Click **Preconfigured Model** or **Configure to order**.

     c. Enter the machine type and model for your server to display the configurator page.

d. Click **Power → Power Cables** to see all line cords.

- Make sure that the insulation is not frayed or worn.

3. Check for any obvious non-Lenovo alterations. Use good judgment as to the safety of any non-Lenovo alterations.
4. Check inside the server for any obvious unsafe conditions, such as metal filings, contamination, water or other liquid, or signs of fire or smoke damage.
5. Check for worn, frayed, or pinched cables.
6. Make sure that the power-supply cover fasteners (screws or rivets) have not been removed or tampered with.

© Copyright Lenovo 2018, 2021

Chapter 1. Introduction

The ThinkSystem™ SR670 server is a 2U rack server that enables the support of up to four PCIe 3.0 x16 GPUs directly attached to the server processors.

Special notices

Service should only be performed by trained and authorized service personnel.

This equipment is not suitable for use in locations where children are likely to be present.

The product is only to be powered on within a rack.

The product is intended to be installed in a server room only. The product is not suitable for use in the direct field of view at a visual display workplace according to §2 of the Workplace Regulations.

Helpful links

You might find the following links helpful:

Warranty lookup	Lenovo ServerProven	Software and operating systems
Lenovo product guides (Lenovo Press)	Lenovo forums	Drivers and Software downloads
Lenovo Support	Lenovo open source projects	Drivers and Firmware Updates Best Practices
Lenovo security advisories		

Identifying your server

When you contact Lenovo for help, the machine type and serial number information helps support technicians to identify your server and provide faster service.

© Copyright Lenovo 2018, 2021

The machine type and serial number are on the ID label on the right rack latch in the front of the server.

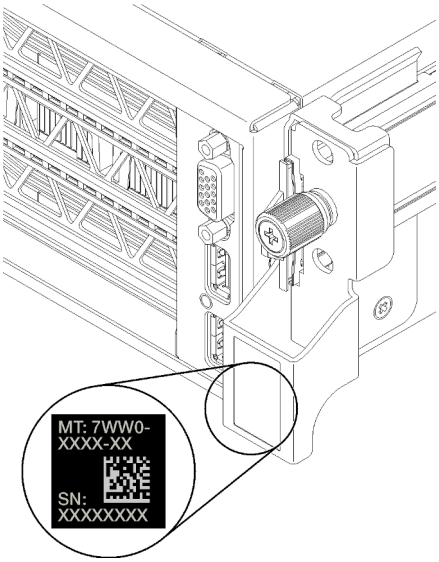

Figure 1. Location of the ID label

XClarity Controller network (XCC) access label

The XCC network access label is attached on the right side of the right pullout tab **1** (as you are looking at the server from the front). After you receive the server, peel the XCC network access label away and store it in a safe place.

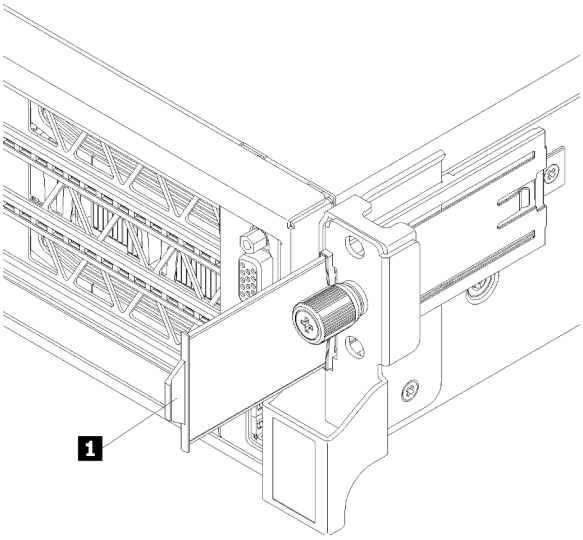

Figure 2. Location of the XClarity Controller network access label

Quick response code

The system service label, which is on the underside of the top cover, provides a quick response (QR) code for mobile access to service information. Scan the QR code with a mobile device to get quick access to the Lenovo Service web site for this server. The Lenovo Service Information Web site provides additional information for parts installation and replacement videos, and error codes for server support.

The following illustration shows the QR code:

https://support.lenovo.com/p/servers/sr670

Figure 3. QR code

Specifications

The following information is a summary of the features and specifications of the server. Depending on the model, some features might not be available, or some specifications might not apply.

Table 1. Server specifications

Specification	Description
Dimension	• 2U • Height: 86.5 mm (3.4 in.) • Width: – Top cover: 438.7 mm (17.3 in.) – EIA flange: 488.0 mm (19.3 in.) • Depth: – EIA flange to rear: 869.5 mm (34.3 in.) – Overall: 932.8 mm (36.8 in.)
Weight	Approximately 37.3 kg (71.9 lbs.), depending on your configuration
Processor	The server requires two Intel ® XEON® processors. For a list of supported processors, see: https://serverproven.lenovo.com **Notes:** • Processors are factory-installed only; no field upgrade. • Due to lower operational processor temperature requirements, full performance cannot be guaranteed and processor throttling may occur when the ambient temperature is above 27°C or when a fan failure event occurs for the following processor SKUs: – 6242R – 6246R – 6248R – 6258R
DIMM	The server contains 24 DIMM slots, which can be populated with 16 GB or 32 GB registered DIMMs (RDIMMs) in quantities of 8, 12, 16, or 24. **Note:** All DIMMs installed in the server must be the same type and capacity. • Minimum configuration: 128 GB using 8 RDIMMs • Maximum configuration: 768 GB using 24 RDIMMs See "Memory module installation" on page 74 for supported DIMM types and population rules. For a list of supported DIMMs, see: https://serverproven.lenovo.com **Note:** List of supported memory module is different for 1st generation (Skylake) and 2nd generation (Cascade Lake) Intel Xeon processors. Make sure to install compatible memory modules to avoid system error.

Table 1. Server specifications (continued)

Specification	Description
Internal drives	The supported drives vary by models. • Up to eight 2.5-inch hot-swap SATA drives using the onboard RAID controller. • Up to eight 2.5-inch hot-swap SAS drives using a supported RAID adatper or HBA. • Up to two M.2 drives mounted on a vertical M.2 backplane.
Expansion slots	• Two PCIe 3.0 x16 slots and one PCIe 3.0 x4 slot in the I/O expansion cage • Two PCIe 3.0 x16 slots in PCIe expansion cage 1 • Two PCIe 3.0 x16 slots in PCIe expansion cage 2 For detailed information, see "Front view" on page 15.
Input/Output (I/O) features	• Front panel: – One VGA connector – One USB 2.0 connector and one USB 3.0 connector • Rear panel: – One serial port
Graphics processing unit (GPU)	The server supports the following double-width, full-height, full-length (FHFL) GPUs, which can be installed in the 3-slot PCIe expansion cage only: • NVIDIA P40 • NVIDIA V100 16 GB • NVIDIA V100 32 GB • AMD Radeon Instinct MI25 For a list of supported GPU adapters, see: https://lenovopress.com/lp1051-lenovo-thinksystem-sr670-server-xeon-sp-gen-2#gpu-adapters. **Note:** With GPUs greater than 250W (such as the AMD MI-25) and CPUs greater than 165W and 165W low TCase SKUs (8180, 8168, 6154, 6146, and 6144), full performance cannot be guaranteed and CPU throttling might occur for ambient temperatures above 30°C. The server also supports the following single-width, full-height, half-length (FHHL) GPU, which can be installed in the 4-slot PCIe expansion cage or in the 3-socket PCIe expansion cage: • NVIDIA T4 70W Low Profile 16 GB **Note:** If you choose to install a single-width, full-height, half-length GPU in the 3-socket PCIe expansion cage, you must install in either the top slot of the bottom slot. The middle slot does not have PCIe connectivity.
RAID adapters	• ThinkSystem RAID 530-8i PCIe adapter • ThinkSystem RAID 730-8i 2GB PCIe adapter • ThinkSystem RAID 930-8i adapter The adapter supports data retention by using NAND flash memory down on the adapter, backed up by the ThinkSystem RAID 930 supercapacitor (called a supercap).
Host bus adapter	• ThinkSystem 430-8i SAS/SATA 12 GB Dense HBA • ThinkSystem 430-8e adapter
System fans	Six dual-rotor fans

Table 1. Server specifications (continued)

Specification	Description
Power supplies	Two hot-swap power supplies for redundancy support • 2000-watt, 220V ac **Note:** In order for the ThinkSystem products to operate error free in both a DC or AC electrical environment, a TN-S earthing system which complies to 60364-1 IEC 2005 standard has to be present or installed.
Electrical input	• Sine-wave input (50 Hz to 60 Hz) required • Input voltage high range: – Minimum: 200 V ac – Maximum: 240 V ac **CAUTION:** **240 V dc input (input range: 180-300 V dc) is supported in Chinese Mainland ONLY. Power supply with 240 V dc input cannot support hot plugging power cord function. Before removing the power supply with dc input, please turn off server or disconnect dc power sources at the breaker panel or by turning off the power source. Then, remove the power cord.**
Acoustical noise emissions (base configuration)	• Sound power, idling: 6.7 bels • Sound power, operating (typical workload): 7.3 bels • Sound power, operating (maximum workload): 8.3 bels **Notes:** • The options supported in this server vary in function, power consumption, and required cooling. Any increase in cooling required by these options will increase the fan speed and generated sound level. The actual sound pressure levels measured in your installation depend upon a variety of factors, including: the number of racks in the installation; the size, materials, and configuration of the room; the noise levels of other equipment; the room ambient temperature and barometric pressure; and the location of employees in relation to the equipment. • The declared acoustic noise level are based on specified configurations and they may change depending on configuration/condition changes. • The declared acoustic noise levels may increase greatly, if high-power components are installed such as high-power NICs, high-power processors and GPUs.
Heat output	Approximate heat output: • Minimum configuration: 2543.86 BTU, 746W (in BTU per hour and watts) – Minimum configuration of two processors, 8 memory modules, zero M.2 adapters, zero PCIe adapters, zero HDDs, zero GPUs, two 2000W power supplies • Maximum configuration: 6963.22 BTU, 2042W (in BTU per hour and watts) – Maximum configuration of two processors, 24 memory modules, two M.2 adapters, three PCIe network adapters, eight HDDs, four GPUs, two 2000W power supplies

Table 1. Server specifications (continued)

Specification	Description
Environment	The server is supported in the following environment: • Air temperature: – Operating: – ASHRAE class A2: 10–35°C (50–95°F); when the altitude exceeds 900 m (2953 ft), the maximum ambient temperature value decreases by 1°C (1.8°F) with every 300 m (984 ft) of altitude increase. – Server off: 5–45°C (41–113°F) – Shipping or storage: -40–60°C (-40–140°F) • Maximum altitude: 3050 m (10 000 ft) • Relative humidity (non-condensing): – Operating: – ASHRAE class A2: 8%–80%; maximum dew point: 21°C (70°F) – Shipping or storage: 8%–90% • Particulate contamination **Attention:** Airborne particulates and reactive gases acting alone or in combination with other environmental factors such as humidity or temperature might pose a risk to the server. For information about the limits for particulates and gases, see "Particulate contamination" on page 8. **Notes:** • Your server complies with ASHRAE class A2 specifications. The server performance might be impacted when the operating temperature is outside the ASHRAE A2 specifications. • The server is designed for standard data center environment and recommended to be placed in industrial data center.
Operating systems	Supported and certified operating systems: • Microsoft Windows Server • VMware ESXi • Red Hat Enterprise Linux • SUSE Linux Enterprise Server References: • Complete list of available operating systems: https://lenovopress.lenovo.com/osig. • OS deployment instructions: See "Deploy the operating system" in *Setup Guide*..

Particulate contamination

Attention: Airborne particulates (including metal flakes or particles) and reactive gases acting alone or in combination with other environmental factors such as humidity or temperature might pose a risk to the device that is described in this document.

Risks that are posed by the presence of excessive particulate levels or concentrations of harmful gases include damage that might cause the device to malfunction or cease functioning altogether. This specification sets forth limits for particulates and gases that are intended to avoid such damage. The limits must not be viewed or used as definitive limits, because numerous other factors, such as temperature or moisture content of the air, can influence the impact of particulates or environmental corrosives and gaseous contaminant transfer. In the absence of specific limits that are set forth in this document, you must implement practices that maintain particulate and gas levels that are consistent with the protection of human health and safety. If Lenovo determines that the levels of particulates or gases in your environment have caused damage to the device, Lenovo may condition provision of repair or replacement of devices or parts on implementation of appropriate remedial measures to mitigate such environmental contamination. Implementation of such remedial measures is a customer responsibility.

Table 2. Limits for particulates and gases

Contaminant	Limits
Reactive gases	Severity level G1 as per ANSI/ISA 71.04-1985[1]: • The copper reactivity level shall be less than 200 Angstroms per month (Å/month ≈ 0.0035 µg/cm^2-hour weight gain).[2] • The silver reactivity level shall be less than 200 Angstroms per month (Å/month ≈ 0.0035 µg/cm^2-hour weight gain).[3] • The reactive monitoring of gaseous corrosivity must be conducted approximately 5 cm (2 in.) in front of the rack on the air inlet side at one-quarter and three-quarter frame height off the floor or where the air velocity is much higher.
Airborne particulates	Data centers must meet the cleanliness level of ISO 14644-1 class 8. For data centers without airside economizer, the ISO 14644-1 class 8 cleanliness might be met by choosing one of the following filtration methods: • The room air might be continuously filtered with MERV 8 filters. • Air entering a data center might be filtered with MERV 11 or preferably MERV 13 filters. For data centers with airside economizers, the choice of filters to achieve ISO class 8 cleanliness depends on the specific conditions present at that data center. • The deliquescent relative humidity of the particulate contamination should be more than 60% RH.[4] • Data centers must be free of zinc whiskers.[5]

[1] ANSI/ISA-71.04-1985. *Environmental conditions for process measurement and control systems: Airborne contaminants*. Instrument Society of America, Research Triangle Park, North Carolina, U.S.A.

[2] The derivation of the equivalence between the rate of copper corrosion growth in the thickness of the corrosion product in Å/month and the rate of weight gain assumes that Cu_2S and Cu_2O grow in equal proportions.

[3] The derivation of the equivalence between the rate of silver corrosion growth in the thickness of the corrosion product in Å/month and the rate of weight gain assumes that Ag_2S is the only corrosion product.

[4] The deliquescent relative humidity of particulate contamination is the relative humidity at which the dust absorbs enough water to become wet and promote ionic conduction.

[5] Surface debris is randomly collected from 10 areas of the data center on a 1.5 cm diameter disk of sticky electrically conductive tape on a metal stub. If examination of the sticky tape in a scanning electron microscope reveals no zinc whiskers, the data center is considered free of zinc whiskers.

Firmware updates

Several options are available to update the firmware for the server.

You can use the tools listed here to update the most current firmware for your server and the devices that are installed in the server.

- Best practices related to updating firmware is available at the following site:
  - https://lenovopress.lenovo.com/lp0656-lenovo-thinksystem-firmware-and-driver-update-best-practices
- The latest firmware can be found at the following site:
  - http://datacentersupport.lenovo.com/products/servers/thinksystem/sr670/7Y37/downloads
- You can subscribe to product notification to stay up to date on firmware updates:
  - https://datacentersupport.lenovo.com/solutions/ht509500

Update method terminology

- **In-band update**. The installation or update is performed using a tool or application within an operating system that is executing on the server's core CPU.
- **Out-of-band update**. The installation or update is performed by the Lenovo XClarity Controller collecting the update and then directing the update to the target subsystem or device. Out-of-band updates have no dependency on an operating system executing on the core CPU. However, most out-of-band operations do require the server to be in the S0 (Working) power state.
- **On-Target update.** The installation or update is initiated from an Operating System executing on the server's operating system.
- **Off-Target update.** The installation or update is initiated from a computing device interacting directly with the server's Lenovo XClarity Controller.
- **UpdateXpress System Packs (UXSPs)**. UXSPs are bundled updates designed and tested to provide the interdependent level of functionality, performance, and compatibility. UXSPs are server machine-type specific and are built (with firmware and device driver updates) to support specific Windows Server, Red Hat Enterprise Linux (RHEL) and SUSE Linux Enterprise Server (SLES) operating system distributions. Machine-type-specific firmware-only UXSPs are also available.

Firmware updating tools

See the following table to determine the best Lenovo tool to use for installing and setting up the firmware:

Tool	Update Methods Supported	Core System Firmware Updates	I/O Devices Firmware Updates	Graphical user interface	Command line interface	Supports UXSPs
Lenovo XClarity Provisioning Manager (LXPM)	In-band[2] On-Target	√		√		
Lenovo XClarity Controller (XCC)	Out-of-band Off-Target	√	Selected I/O devices	√		

Tool	Update Methods Supported	Core System Firmware Updates	I/O Devices Firmware Updates	Graphical user interface	Command line interface	Supports UXSPs
Lenovo XClarity Essentials OneCLI (OneCLI)	In-band Out-of-band On-Target Off-Target	√	All I/O devices		√	√
Lenovo XClarity Essentials UpdateXpress (LXCE)	In-band Out-of-band On-Target Off-Target	√	All I/O devices	√		√
Lenovo XClarity Essentials Bootable Media Creator (BoMC)	In-band Out-of-band Off-Target	√	All I/O devices	√ (BoMC application)	√ (BoMC application)	√
Lenovo XClarity Administrator (LXCA)	In-band[1] Out-of-band[2] Off-Target	√	All I/O devices	√		√
Lenovo XClarity Integrator (LXCI) for VMware vCenter	Out-of-band Off-Target	√	Selected I/O devices	√		
Lenovo XClarity Integrator (LXCI) for Microsoft Windows Admin Center	In-band Out-of-band On-Target Off-Target	√	All I/O devices	√		√
Lenovo XClarity Integrator (LXCI) for Microsoft System Center Configuration Manager	In-band On-Target	√	All I/O devices	√		√

Notes:

1. For I/O firmware updates.
2. For BMC and UEFI firmware updates.

- **Lenovo XClarity Provisioning Manager**

  From Lenovo XClarity Provisioning Manager, you can update the Lenovo XClarity Controller firmware, the UEFI firmware, and the Lenovo XClarity Provisioning Manager software.

Note: By default, the Lenovo XClarity Provisioning Manager Graphical User Interface is displayed when you press F1. If you have changed that default to be the text-based system setup, you can bring up the Graphical User Interface from the text-based system setup interface.

Additional information about using Lenovo XClarity Provisioning Manager to update firmware, see:

"Firmware Update" section in the LXPM documentation compatible with your server at https://pubs.lenovo.com/lxpm-overview/

Important: Lenovo XClarity Provisioning Manager (LXPM) supported version varies by product. All versions of Lenovo XClarity Provisioning Manager are referred to as Lenovo XClarity Provisioning Manager and LXPM in this document, unless specified otherwise. To see the LXPM version supported by your server, go to https://pubs.lenovo.com/lxpm-overview/.

- **Lenovo XClarity Controller**

  If you need to install a specific update, you can use the Lenovo XClarity Controller interface for a specific server.

  Notes:

  – To perform an in-band update through Windows or Linux, the operating system driver must be installed and the Ethernet-over-USB (sometimes called LAN over USB) interface must be enabled.

    Additional information about configuring Ethernet over USB, see:

    "Configuring Ethernet over USB" section in the XCC documentation version compatible with your server at https://pubs.lenovo.com/lxcc-overview/

  – If you update firmware through the Lenovo XClarity Controller, make sure that you have downloaded and installed the latest device drivers for the operating system that is running on the server.

  Specific details about updating firmware using Lenovo XClarity Controller, see:

  "Updating Server Firmware" section in the XCC documentation compatible with your server at https://pubs.lenovo.com/lxcc-overview/

  Important: Lenovo XClarity Controller (XCC) supported version varies by product. All versions of Lenovo XClarity Controller are referred to as Lenovo XClarity Controller and XCC in this document, unless specified otherwise. To see the XCC version supported by your server, go to https://pubs.lenovo.com/lxcc-overview/.

- **Lenovo XClarity Essentials OneCLI**

  Lenovo XClarity Essentials OneCLI is a collection of command line applications that can be used to manage Lenovo servers.Its update application can be used to update firmware and device drivers for your servers. The update can be performed within the host operating system of the server (in-band) or remotely through the BMC of the server (out-of-band).

  Specific details about updating firmware using Lenovo XClarity Essentials OneCLI, see:

  https://pubs.lenovo.com/lxce-onecli/onecli_c_update

- **Lenovo XClarity Essentials UpdateXpress**

  Lenovo XClarity Essentials UpdateXpress provides most of OneCLI update functions through a graphical user interface (GUI). It can be used to acquire and deploy UpdateXpress System Pack (UXSP) update packages and individual updates. UpdateXpress System Packs contain firmware and device driver updates for Microsoft Windows and for Linux.

  You can obtain Lenovo XClarity Essentials UpdateXpress from the following location:

  https://datacentersupport.lenovo.com/solutions/lnvo-xpress

- **Lenovo XClarity Essentials Bootable Media Creator**

You can use Lenovo XClarity Essentials Bootable Media Creator to create bootable media that is suitable for firmware updates, VPD updates, inventory and FFDC collection, advanced system configuration, FoD Keys management, secure erase, RAID configuration, and diagnostics on supported servers.

You can obtain Lenovo XClarity Essentials BoMC from the following location:

https://datacentersupport.lenovo.com/solutions/lnvo-bomc

- **Lenovo XClarity Administrator**

  If you are managing multiple servers using the Lenovo XClarity Administrator, you can update firmware for all managed servers through that interface. Firmware management is simplified by assigning firmware-compliance policies to managed endpoints. When you create and assign a compliance policy to managed endpoints, Lenovo XClarity Administrator monitors changes to the inventory for those endpoints and flags any endpoints that are out of compliance.

  Specific details about updating firmware using Lenovo XClarity Administrator are available at:

  https://pubs.lenovo.com/lxca/update_fw

- **Lenovo XClarity Integrator offerings**

  Lenovo XClarity Integrator offerings can integrate management features of Lenovo XClarity Administrator and your server with software used in a certain deployment infrastructure, such as VMware vCenter, Microsoft Admin Center, or Microsoft System Center.

  Specific details about updating firmware using Lenovo XClarity Integrator offerings, see:

  https://pubs.lenovo.com/lxci-overview/

Tech Tips

Lenovo continually updates the support website with the latest tips and techniques that you can use to solve issues that your server might encounter. These Tech Tips (also called retain tips or service bulletins) provide procedures to work around issues or solve problems related to the operation of your server.

To find the Tech Tips available for your server:

1. Go to http://datacentersupport.lenovo.com and navigate to the support page for your server.
2. Click **Knowledge Base & Guides** from the navigation pane.
3. Click **Documentation Type → Solution** from the drop-down menu.

   Follow the on-screen instructions to choose the category for the problem that you are having.

Security advisories

Lenovo is committed to developing products and services that adhere to the highest security standards in order to protect our customers and their data. When potential vulnerabilities are reported, it is the responsibility of the Lenovo Product Security Incident Response Team (PSIRT) to investigate and provide information to our customers so they may put mitigation plans in place as we work toward providing solutions.

The list of current advisories is available at the following location:

https://datacentersupport.lenovo.com/product_security/home

Power on the server

After the server performs a short self-test (power status LED flashes quickly) when connected to input power, it enters a standby state (power status LED flashes once per second).

The server can be turned on (power LED on) in any of the following ways:

- You can press the power button.
- The server can restart automatically after a power interruption.
- The server can respond to remote power-on requests sent to the Lenovo XClarity Controller.

For information about powering off the server, see "Power off the server" on page 13.

Power off the server

The server remains in a standby state when it is connected to a power source, allowing the Lenovo XClarity Controller to respond to remote power-on requests. To remove all power from the server (power status LED off), you must disconnect all power cables.

To place the server in a standby state (power status LED flashes once per second):

Note: The Lenovo XClarity Controller can place the server in a standby state as an automatic response to a critical system failure.

- Start an orderly shutdown using the operating system (if supported by your operating system).
- Press the power button to start an orderly shutdown (if supported by your operating system).
- Press and hold the power button for more than 4 seconds to force a shutdown.

When in a standby state, the server can respond to remote power-on requests sent to the Lenovo XClarity Controller. For information about powering on the server, see "Power on the server" on page 12.

Chapter 2. Server components

This section provides information to help you locate your server components.

Front view

On the front of the server, the following components are available: PCIe adapters, PCIe expansion cages, and the KVM connectors (Monitor and 2 USB ports).

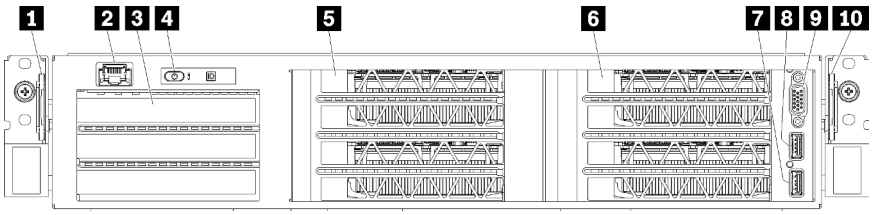

Figure 4. Front view of the server

Table 3. Components on the front of the server

Callout	Callout
1 Left pullout tab	2 Management port
3 I/O expansion cage	4 Operator panel
5 PCIe expansion cage 2	6 PCIe expansion cage 1
7 USB 2.0 port	8 USB 3.0 port
9 Video port	10 Right pullout tab

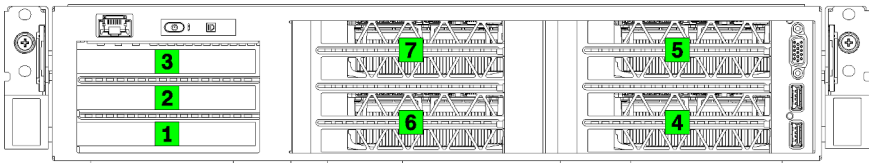

Figure 5. Numbering of the PCIe slots on the server (3-socket PCIe expansion cage)

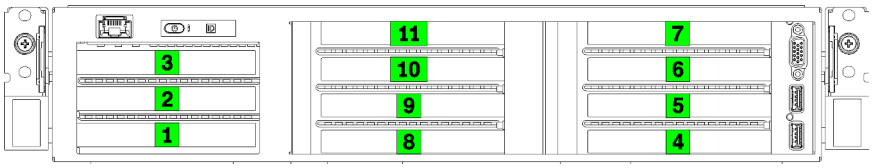

Figure 6. Numbering of the PCIe slots on the server (4-socket PCIe expansion cage)

1 Left pullout tab

You can use the left pullout tab to affix information specific to your server.

2 Management port

© Copyright Lenovo 2018, 2021

Through the management port, you can access the XCC directly by connecting your laptop to the management port using an Ethernet cable. Make sure that you modify the IP settings on the laptop so that it is on the same network as the server default settings.

Important: Access to the XCC on the Product_name, either locally or remotely, is supported **only** through the management port.

3 I/O expansion cage

The I/O expansion cage contains:

- Two PCIe 3.0 x16 full-height, half-length slots
- One PCIe 3.0 x4 full-height, half-length slot

4 Operator panel

For information about the operator panel, see "Operator panel" on page 18.

5 PCIe expansion cage 2

Two types of PCIe expansion cage are available:

- 3-socket PCIe expansion cage, which contains:
  - Three PCIe 3.0 x16 full-height, full-length slots

    Note: Only the top and bottom slots are available for use. The middle slot has no PCIe connectivity.
- 4-socket PCIe expansion cage, which contains:
  - Four PCIe 3.0 x16 full-height, half-length slots.

    Note: Only single-width, full-height, half-length GPUs are support in the 4-socket PCIe expansion cage.

Important: The same type of PCIe expansion cage must be used for PCIe expansion cage 2 and PCIe expansion cage 1.

See Figure 5 "Numbering of the PCIe slots on the server (3-socket PCIe expansion cage)" on page 15 and Figure 6 "Numbering of the PCIe slots on the server (4-socket PCIe expansion cage)" on page 15 for the ordering of the PCIe slots in PCIe expansion cage 2.

6 PCIe expansion cage 1

Two types of PCIe expansion cage are available:

- 3-socket PCIe expansion cage, which contains:
  - Three PCIe 3.0 x16 full-height, full-length slots

    Note: Only the top and bottom slots are available for use. The middle slot has no PCIe connectivity.
  - 7 USB 3.0 port
  - 8 USB 2.0 port
  - 9 Video port
- 4-socket PCIe expansion cage, which contains:
  - Four PCIe 3.0 x16 full-height, half-length slots.

Note: Only single-width, full-height, half-length GPUs are supported in the 4-socket PCIe expansion cage.

- 7 USB 3.0 port
- 8 USB 2.0 port
- 9 Video port

Important: The same type of PCIe expansion cage must be used for PCIe expansion cage 2 and PCIe expansion cage 1.

See Figure 5 “Numbering of the PCIe slots on the server (3-socket PCIe expansion cage)” on page 15 and Figure 6 “Numbering of the PCIe slots on the server (4-socket PCIe expansion cage)” on page 15 for the ordering of the PCIe slots in PCIe expansion cage 2.

10 Right pullout tab

The XCC network label is affixed to the right side of the right pullout tab.

Operator panel

The operator panel of the server provides controls and LEDs.

The following illustration shows the operator panel of the server.

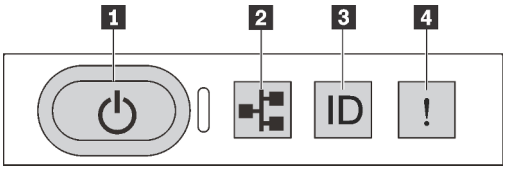

Figure 7. Operator panel

Table 4. Components on the operator panel

Callout	Callout
1 Power button with power status LED	2 System activity LED
3 System ID button with system ID LED	4 System error LED

1 Power button with power status LED

You can press the power button to power on the server when you finish setting up the server. You also can hold the power button for several seconds to power off the server if you cannot shut down the server from the operating system. The power status LED helps you to determine the current power status.

Status	Color	Description
Solid on	Green	The server is on and running.
Slow blinking (about one flash per second)	Green	The server is off and is ready to be powered on (standby state).
Fast blinking (about four flashes per second)	Green	The server is off, but the XClarity Controller is initializing, and the server is not ready to be powered on.
Off	None	There is no ac power applied to the server.

2 System activity LED

The system activity LED on the operator panel is not currently used.

3 System ID button with system ID LED

Use this system ID button and the blue system ID LED to visually locate the server. Each time you press the system ID button, the state of both the system ID LEDs changes. The LEDs can be changed to on, blinking, or off. You can also use the Lenovo XClarity Controller or a remote management program to change the state of the system ID LEDs to assist in visually locating the server among other servers.

4 System error LED

The system error LED helps you to determine if there are any system errors.

Status	Color	Description	Action
On	Yellow	An error has been detected on the server. Causes might include but not limited to the following errors: • The temperature of the server reached the non-critical temperature threshold. • The voltage of the server reached the non-critical voltage threshold. • A fan has been detected to be running at low speed. • The power supply has a critical error. • The power supply is not connected to the power.	Check the event log to determine the exact cause of the error.
Off	None	The server is off or the server is on and is working correctly.	None.

Rear view

The rear of the server provides access to several connectors and components.

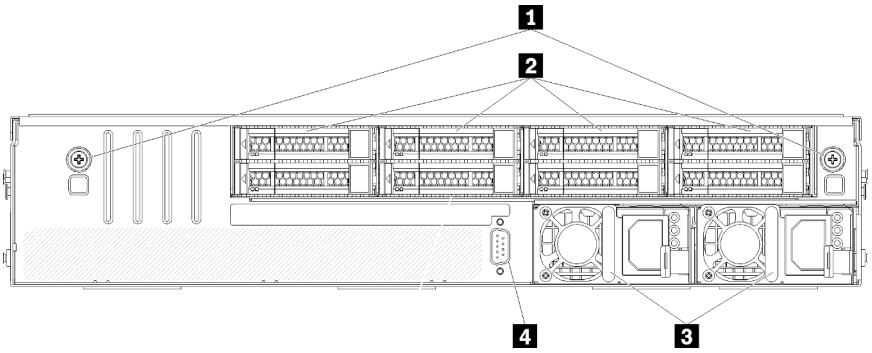

Figure 8. Rear view of server

Table 5. Components on the rear of the server

Callout	Callout
1 Drive cage thumbscrews	2 Hot-swap hard drives
3 Hot-swap power supplies	4 Serial port

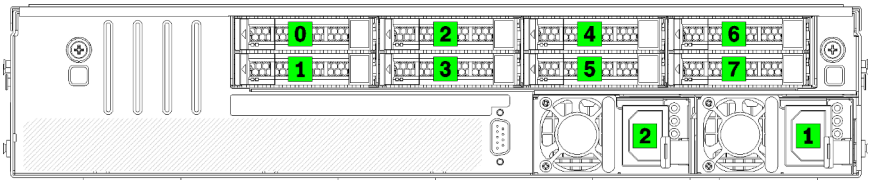

Figure 9. Numbering of hard drives and power supplies

1 Drive cage thumbscrews

Use these thumbscrews to secure the drive cage to the server chassis.

2 Hot-swap hard drives

You can install up to eight hot-swap hard drives. The hard drive bays are numbered from 0 to 7 (and labeled). See Figure 9 “Numbering of hard drives and power supplies” on page 20.

3 Hot-swap power supplies

You must install two hot-swap power supplies. Power supplies are numbered 1 and 2. See Figure 9 “Numbering of hard drives and power supplies” on page 20.

4 Serial port

Use the serial port to connect to the host system serial interface.front

Power Supply LEDs

The illustration in this section shows the power supply LEDs.

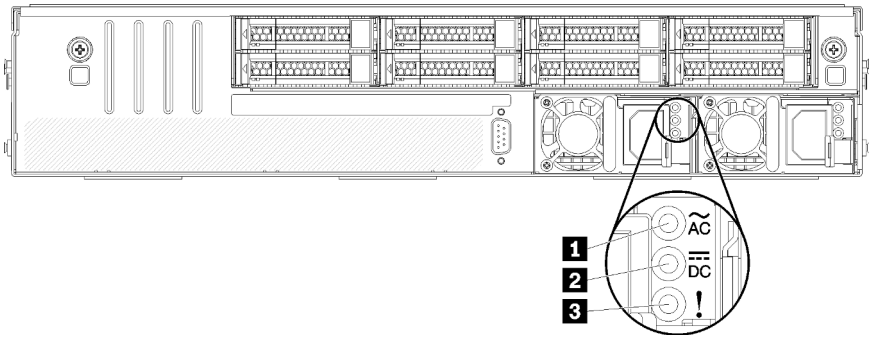

Figure 10. Rear view LEDs of the server

Table 6. Power supply LEDs

Callout	Callout
1 Power input LED	2 Power output LED
3 Power supply error LED	

1 Power input LED
2 Power output LED
3 Power supply error LED

Each hot-swap power supply has three status LEDs.

LED	Description
1 Power input LED	• Green: The power supply is connected to the ac power source. • Off: The power supply is disconnected from the ac power source or a power problem occurs.
2 Power output LED	• Green: The server is on and the power supply is working normally. • Off: The server is powered off, or the power supply is not working properly. If the server is powered on but the power output LED is off, replace the power supply.
3 Power supply error LED	• Yellow: The power supply has failed. To resolve the issue, replace the power supply. • Off: The power supply is working normally.

System board components

The illustration in this section shows the component locations on the system board.

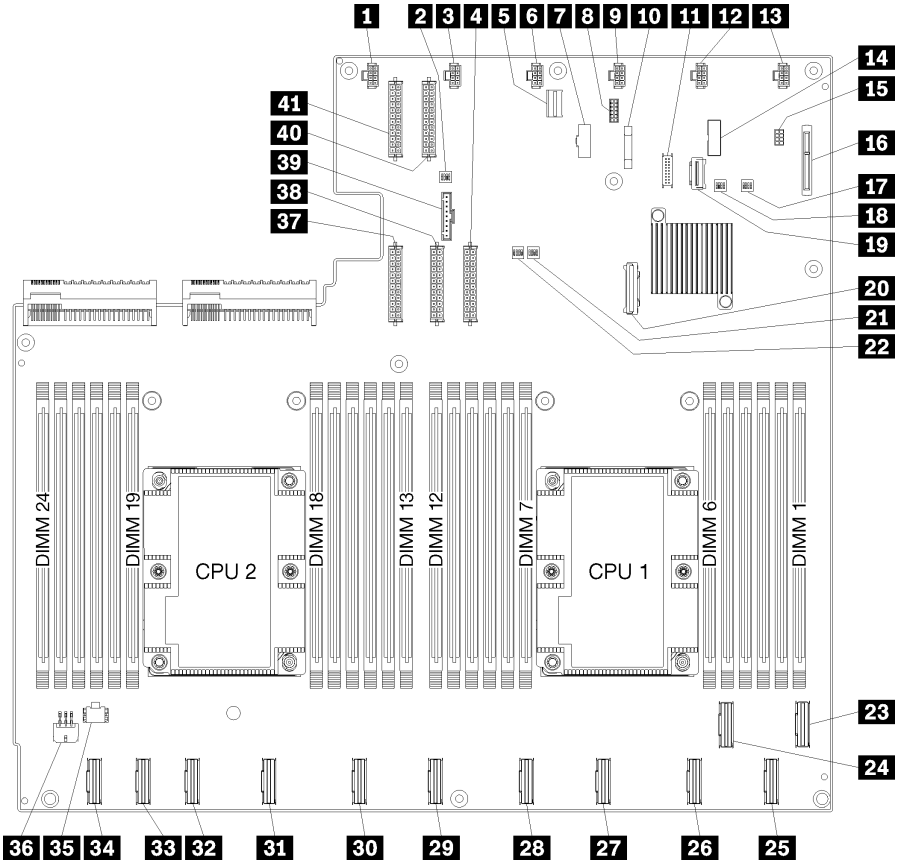

Figure 11. System board components

Table 7. System board components

Callout	Callout
1 System fan 6 connector	2 Switch block 1
3 System fan 5 connector	4 Power connector 1
5 XClarity Controller management connector	6 System fan 4 connector
7 Front panel VGA connector	8 Serial connector
9 System fan 3 connector	10 3V battery (CR2032)
11 Front panel USB connector	12 System fan 2 connector
13 System fan 1 connector	14 TPM header
15 Storage management connector	16 M.2 backplane connector
17 PCH/ME switch block	18 Switch block 3
19 PCIe connector 13 (PCIe x4)	20 SATA connector
21 FPGA switch block	22 Switch block 2

Table 7. System board components (continued)

Callout	Callout
23 PCIe connector 1 (CPU1)	24 PCIe connector 2 (CPU1)
25 PCIe connector 3 (CPU1)	26 PCIe connector 4 (CPU1)
27 PCIe connector 5 (CPU1)	28 PCIe connector 6 (CPU1)
29 PCIe connector 7 (CPU2)	30 PCIe connector 8 (CPU2)
31 PCIe connector 9 (CPU2)	32 PCIe connector 10 (CPU2)
33 PCIe connector 11 (CPU2)	34 PCIe connector 12 (CPU2)
35 I/O cage power connector 2	36 I/O cage power connector 1
37 Power connector 5	38 Power connector 2
39 Operator panel connector	40 Power connector 3
41 Power connector 4	

The system board is secured by two air baffle posts, two M.2 adapter guideposts, and 10 screws. See the following image for the locations.

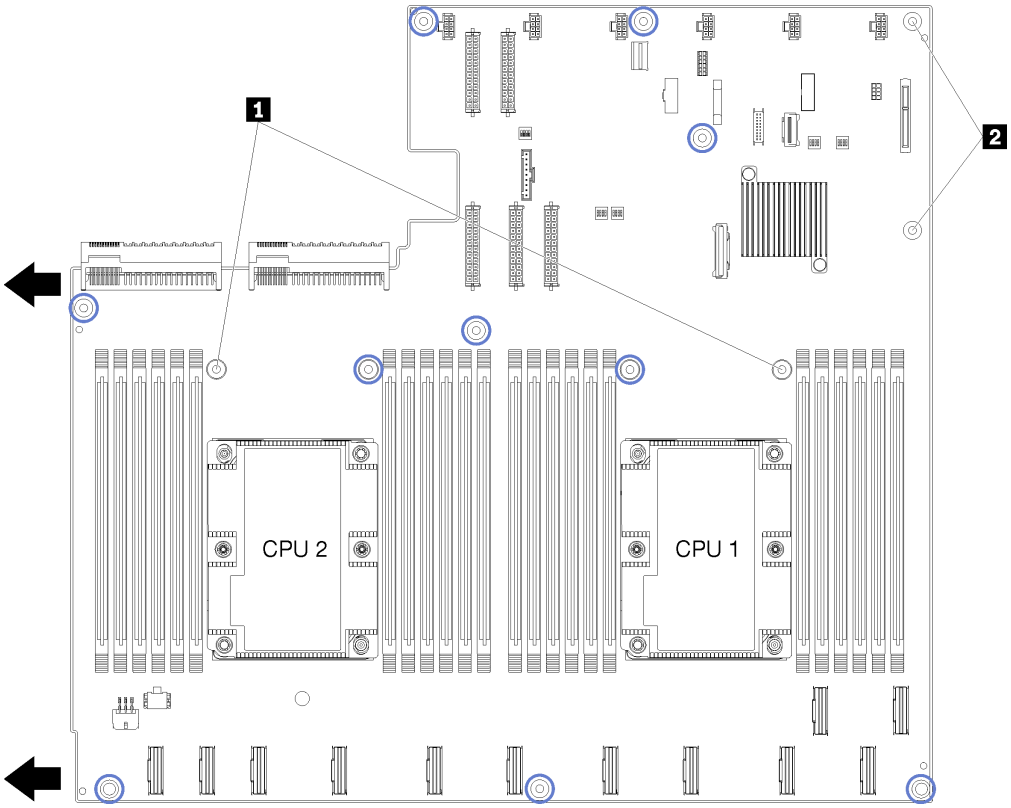

Figure 12. System board screw locations

Table 8. System board components

1 Air baffle posts
2 M.2 adapter guideposts

Jumper settings

The jumper settings for Product_name components are listed

Important:

- Before you move any jumpers, power off the server; then, disconnect all power cords and external cables. Do not open your server or attempt any repair before reading and understanding the following information:
  - https://pubs.lenovo.com/safety_documentation/
  - "Handling static-sensitive devices" on page 64
- Any system-board switch or jumper block that is not shown in the illustrations in this document is reserved

GPU adapters

The following table lists the required jumper settings for the GPU adapters.

Table 9. PCIe adapters jumper settings

	Jumper number	Jumper function	Required setting
PCIe expansion cage 1 (right)	J11	Card inversion state	Inverted
PCIe expansion cage 2 GPU 2 (middle)	J11	Card inversion state	Inverted

I/O expansion cage

The following table lists the required jumper settings for the I/O expansion cage card.

Table 10. I/O expansion cage jumper settings

Jumper number	Jumper number	Jumper function	Required setting
I/O expansion cage (right)	J11	Card inversion state	Default

Switch blocks

Switch blocks are located on the system board.

Notes:

- If there is a clear protective sticker on the top of the switch blocks, you must remove and discard it to access the switches.
- Any system-board switch or jumper block that is not shown in the illustrations in this document is reserved

SW1 (PCH/ME switch block)

The PCH/ME switch block is located near the M2 SATA/PCIe backbplane connector on the system board. See "System board components" on page 22 for the exact location of the switch block.

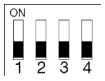

Table 11 "PCH/ME switch block definition" on page 25 describes the functions of the switch block.

Table 11. PCH/ME switch block definition

Switch position number	Default position	Function	Description
1	Off	Clear CMOS	Toggle to ON to clear the real time clock (RTC) registry.

Important:

1. Before you change any switch settings or move any jumpers, turn off the server; then, disconnect all power cords and external cables. Review the information in https://pubs.lenovo.com/safety_documentation/, "Installation Guidelines" on page 63, "Handling static-sensitive devices" on page 64, and "Power off the server" on page 13.

SW6 (system switch block 1)

System switch block 1 is located near the operator panel connector on the system board. See "System board components" on page 22 for the exact location of the switch block.

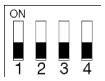

Table 12 "System switch block 1 definition" on page 25 describes the functions of the switch block.

Table 12. System switch block 1 definition

Switch position number	Default position	Function	Description
2	Off	Force XCC update	Toggle to ON to force the Lenovo Xclarity Controller to update to the latest version.

Important:

1. Before you change any switch settings or move any jumpers, turn off the server; then, disconnect all power cords and external cables. Review the information in https://pubs.lenovo.com/safety_documentation/, "Installation Guidelines" on page 63, "Handling static-sensitive devices" on page 64, and "Power off the server" on page 13.

SW7 (system switch block 2)

System switch block 2 is located near power connector 1 on the system board. See "System board components" on page 22 for the exact location of the switch block.

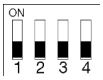

Table 13 "System switch block 2 definition" on page 26 describes the functions of the switch block.

Table 13. System switch block 2 definition

Switch position number	Default position	Function	Description
2	Off	Override power-on password	Toggle to ON to override the power-on password.
4	Off	Force XCC reset	Toggle to ON to reset the Lenovo XClarity Controller.

Important:

1. Before you change any switch settings or move any jumpers, turn off the server; then, disconnect all power cords and external cables. Review the information in https://pubs.lenovo.com/safety_documentation/, "Installation Guidelines" on page 63, "Handling static-sensitive devices" on page 64, and "Power off the server" on page 13.

SW11 (FPGA switch block)

The FPGA switch block is located next to system switch block 2 on the system board. See "System board components" on page 22 for the exact location of the switch block.

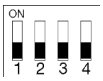

Table 14 "FPGA switch block definition" on page 26 describes the functions of the switch block.

Table 14. FPGA switch block definition

Switch position number	Default position	Function	Description
1	Off	TPM physical presence	Toggle to ON to assert physical presence.

Important:

1. Before you change any switch settings or move any jumpers, turn off the server; then, disconnect all power cords and external cables. Review the information in https://pubs.lenovo.com/safety_

documentation/, “Installation Guidelines” on page 63, “Handling static-sensitive devices” on page 64, and “Power off the server” on page 13.

Internal cable routing

Some of the components in the server have internal cables and cable connectors.

To connect cables, observe the following guidelines:

- Turn off the server before you connect or disconnect any internal cables.
- See the documentation that comes with any external devices for additional cabling instructions. It might be easier for you to route cables before you connect the devices to the server.
- Cable identifiers of some cables are printed on the cables that come with the server and optional devices. Use these identifiers to connect the cables to the correct connectors.
- Ensure that the cable is not pinched and does not cover any connectors or obstruct any components on the system board.
- Ensure that the relevant cables pass through the cable guides, troughs, and pathways.

Note: Disengage all latches, release tabs, or locks on cable connectors when you disconnect cables from the system board. Failing to release them before removing the cables will damage the cable sockets on the system board, which are fragile. Any damage to the cable sockets might require replacing the system board.

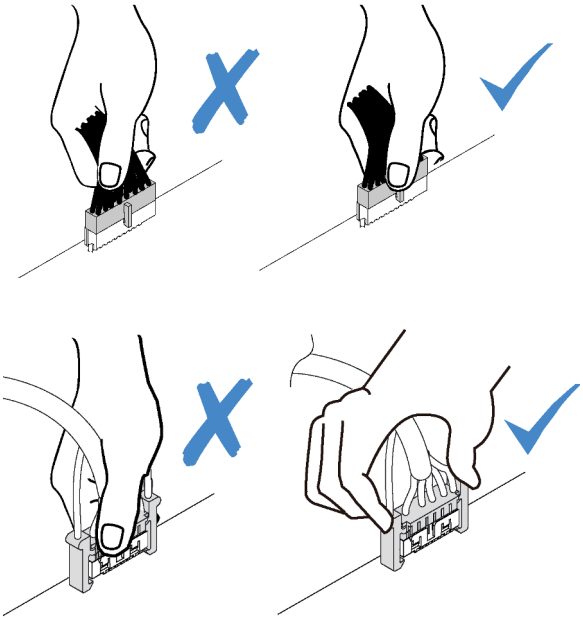

Internal cable routing guides

Wthin the server chassis, several cable routing guides are available to ensure that all cables are routed appropriately.

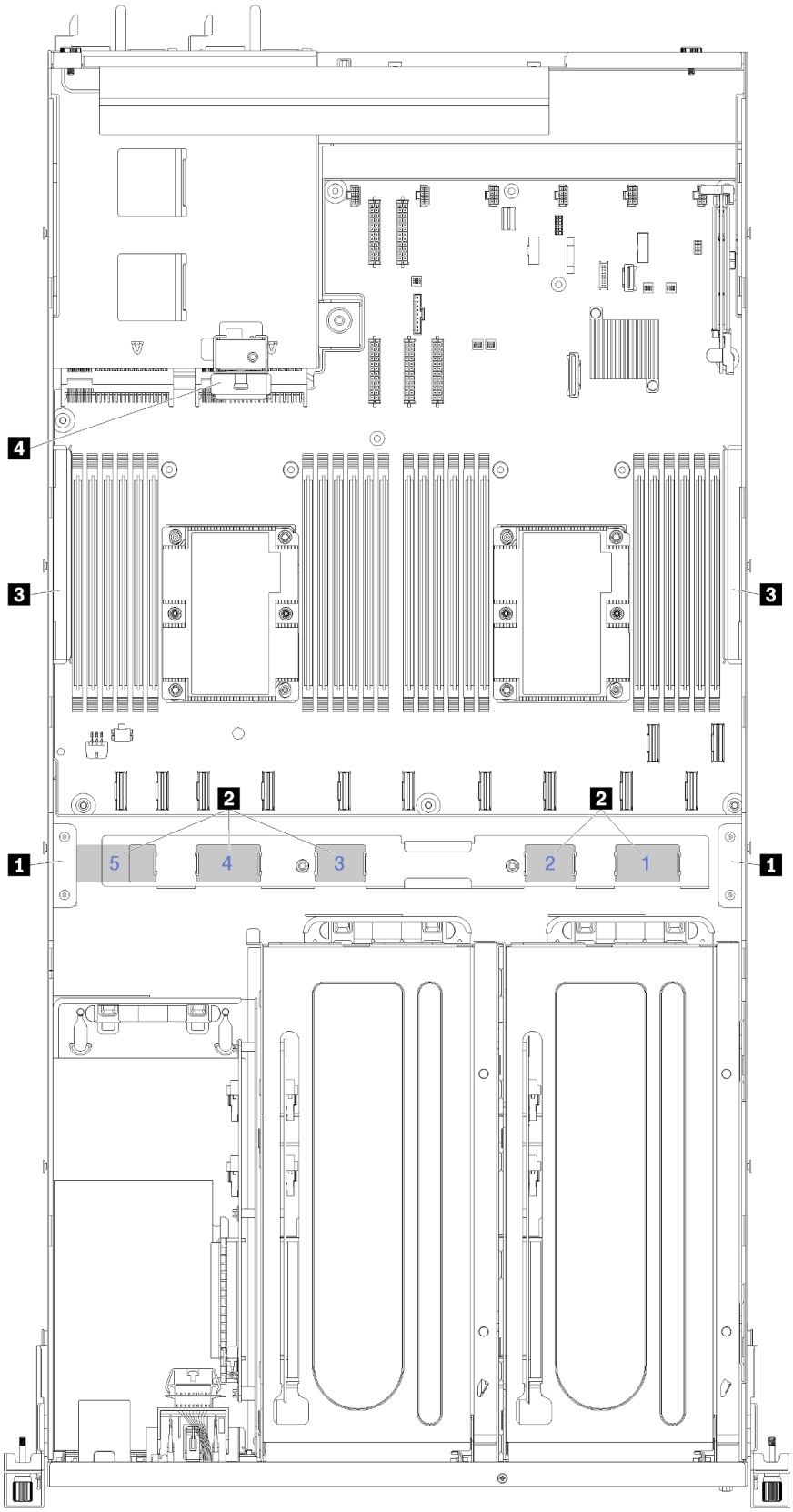

Figure 13. Cable routing guides

Note: Blue numbers represent cable routing pathways under the fan cage.

Cable Guide	Description
1 Front cable routing guides	Two cable routing guides are provided on the left and right of the cable pathways (when looking at the server from the front). • **Left front cable routing guide**. The order of cable placement in the left front cable routing guide is as follows: 1. Management port cable 2. Operator panel cable 3. PCIe expansion cage 2 power cable assembly. See "3-slot PCIe expansion cage 2 cable routing" on page 44 for PCIe expansion cage 2 cable routing. 4. RAID adapter SAS signal cables (if installed) • **Right front cable routing guide**. The order of cable placement in the right front cable routing guide is as follows: 1. USB cable 2. VGA cable 3. PCIe expansion cage 1 power cable assembly.
2 Cable routing pathways	The cable routing pathways ensure that sufficient clearance is available to protect the cables when the fan cage is installed. The following cable pathways are used: • Cable pathway 1 is unused. • Cable pathway 2. Routing for the PCIe cables from PCIe expansion cage 1. See "3-slot PCIe expansion cage 1 cable routing" on page 35 for PCIe expansion cage 1 cable routing. • Cable pathway 3. Routing for the PCIe cables from PCIe expansion cage 2. See "3-slot PCIe expansion cage 2 cable routing" on page 44 for PCIe expansion cage 2 cable routing. • Cable pathway 4. Routing for the PCIe cables from the I/O expansion cage. See "I/O expansion cage cable routing" on page 31 for I/O expansion cage cable routing. • Cable pathway 5. Routing for the I/O expansion cage card power cable.

Cable Guide	Description
3 Cable routing troughs	Two removable cable routing troughs are provided on the left and right of the server and behind the cable pathways (when looking at the server from the front). • **Left cable routing trough** The order of cable placement for the cables in the left cable routing trough is as follows: 1. Management port cable 2. Operator panel cable 3. PCIe expansion cage 2 power cable assembly. See "3-slot PCIe expansion cage 2 cable routing" on page 44 for PCIe expansion cage 2 cable routing. 4. RAID adapter SAS signal cables (if installed) • **Right cable routing trough** The order of cable placement for cables in the right cable routing trough is as follows: 1. PCIe 13 cable 2. USB cable 3. VGA cable 4. PCIe expansion cage 1 power cable assembly. See "3-slot PCIe expansion cage 1 cable routing" on page 35 for PCIe expansion cage 1 cable routing. 5. Fan cage power cable.
4 Rear cable routing guide	The rear cable routing guide is located in front of the drive cage. The order of cable placement for the cables in the rear cable routing guide is as follows: The order of cable placement for the cables in the rear cable routing guide is as follows: 1. Management port cable 2. Operator panel cable 3. PCIe expansion cage 2 power cable assembly. See "3-slot PCIe expansion cage 2 cable routing" on page 44 for PCIe expansion cage 2 cable routing.

I/O expansion cage cable routing

Use the section to understand the cable routing for the I/O expansion cage.

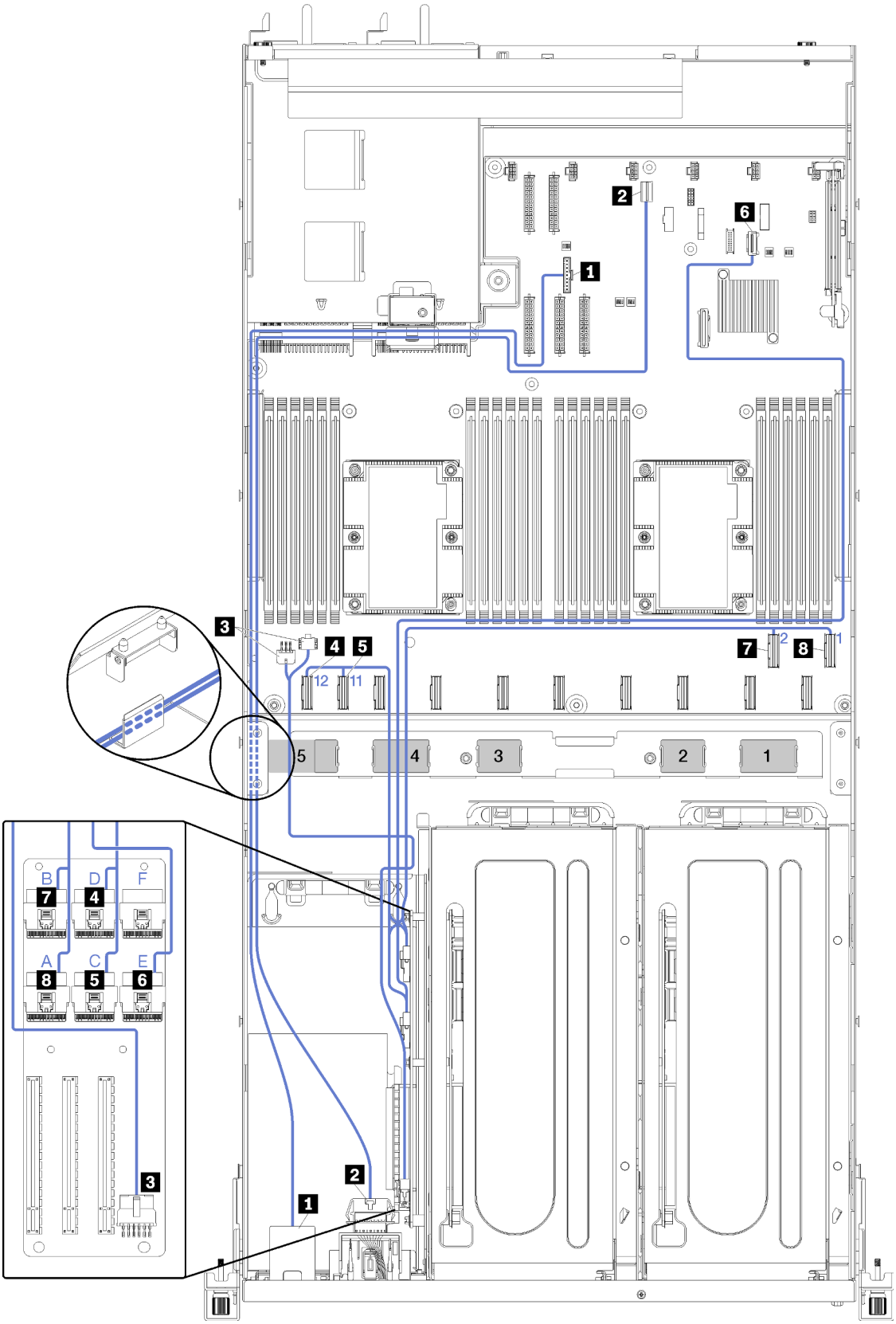

Figure 14. Cable routing for the I/O expansion cage

Note: Blue numbers/alphabets represent cable routing pathways under the fan cage.

The management port cable and operator panel cable are routed through the left cable routing trough (as you are looking from the front of the server) and through the rear cable routing guide. The order of cable placement for cables in the left cable routing trough is as follows:

1. Management port cable
2. Operator panel cable
3. PCIe expansion cage 2 power cable assembly. See "3-slot PCIe expansion cage 2 cable routing" on page 44 for PCIe expansion cage 2 cable routing.
4. RAID adapter SAS signal cables (if installed)

The order of cable placement in the rear cable routing guide is as follows:

1. Management port cable
2. Operator panel cable
3. PCIe expansion cage 2 power cable assembly. See "3-slot PCIe expansion cage 2 cable routing" on page 44 for PCIe expansion cage 2 cable routing.

Cable	From	To
1 Management port cable	The XClarity Controller management connector on the system board.	To the management port adapter in the I/O cage through the rear cable routing guide and through the left cable routing trough (as you are looking from the front of the server).
2 Operator panel power cable	The operator panel connector on the system board.	To the operator panel in the I/O cage through the rear cable routing guide and through the left cable routing trough (as you are looking from the front of the server).
3 I/O cage expansion card power cable	I/O cage power connector 1 and I/O cage power connector 2 on the system board.	To the power connector on the I/O cage expansion card through cable routing pathway 5.
4 PCIe 12 cable	PCIe connector 12 on the system board.	To PCIe connector D on the I/O cage expansion card through cable routing pathway 4.
5 PCIe 11 cable	PCIe connector 11 on the system board.	To PCIe connector C on the I/O cage expansion card through cable routing pathway 4.
6 PCIe 13 cable	PCIe connector 13 on the system board (labeled PCIe x4).	To PCIe connector E on the I/O cage expansion card through the right cable routing trough (as you are looking from the front of the server) and through cable routing pathway 4.
7 PCIe 2 cable	PCIe connector 2 on the system board.	To PCIe connector B on the I/O cage expansion card through cable routing pathway 4.
8 PCIe 1 cable	PCIe connector 1 on the system board.	To PCIe connector A on the I/O cage expansion card through cable routing pathway 4.

3-slot PCIe expansion cage 1 cable routing

Use the section to understand the cable routing for 3-slot PCIe expansion cage 1.

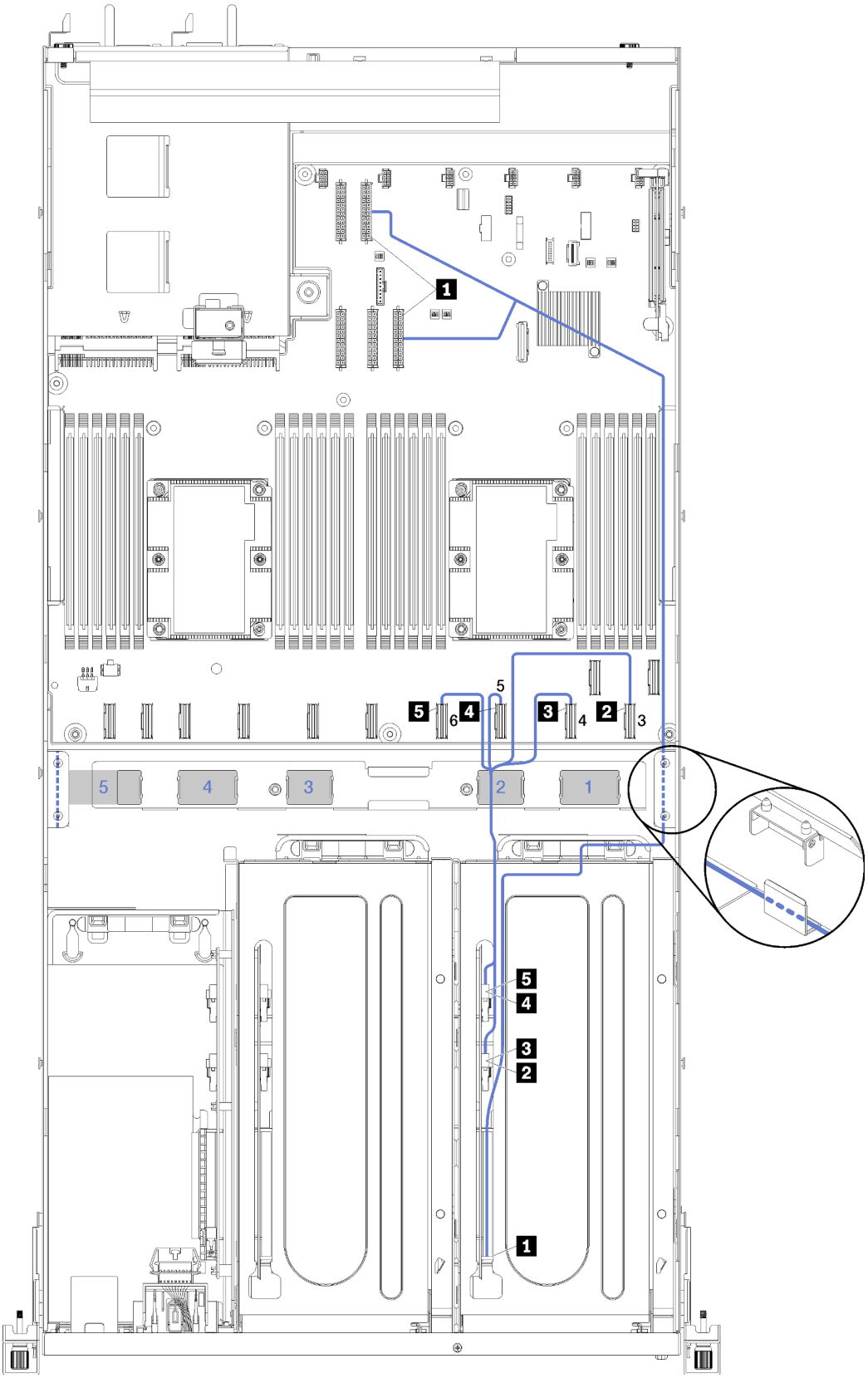

Figure 15. Cable routing for the 3-slot PCIe expansion cage 1

Note: Blue numbers represent cable routing pathways under the fan cage.

The PCIe expansion cage power cable is routed through the right cable routing trough (as you are looking from the front of the server). The order of cable placement for cables in the right cable routing trough is as follows:

1. PCIe 13 cable
2. USB cable
3. VGA cable
4. PCIe expansion cage 1 power cable assembly
5. Fan cage power cable. See "Fan cage cable routing" on page 57 for system fan cage routing information.

Cable	From	To
1 PCIe expansion cage 1 power cable (includes cabling for the PCIe expansion cage 1 and both GPU adapters)	Power connector 1 and power connector 3 on the system board.	**Note:** The GPU adapter power cable is routed through the right cable routing trough (as you are looking from the front of the server). • Power connector on the PCIe expansion cage 1 card. • GPU adapter in slot 4 • GPU adapter in slot 5
2 PCIe 3 cable	PCIe connector 3 on the system board.	To PCIe connector F on the PCIe expansion cage 1 expansion card through cable pathway 2.
3 PCIe 4 cable	PCIe connector 4 on the system board.	To PCIe connector E on the PCIe expansion cage 1 expansion card through cable pathway 2.
4 PCIe 5 cable	PCIe connector 5 on the system board.	To PCIe connector A on the PCIe expansion cage 1 expansion card through cable pathway 2.
5 PCIe 6 cable	PCIe connector 6 on the system board.	To PCIe connector B on the PCIe expansion cage 1 expansion card through cable pathway 2.

4-slot PCIe expansion cage 1 cable routing

Use the section to understand the cable routing for the 4-slot PCIe expansion cage 1.

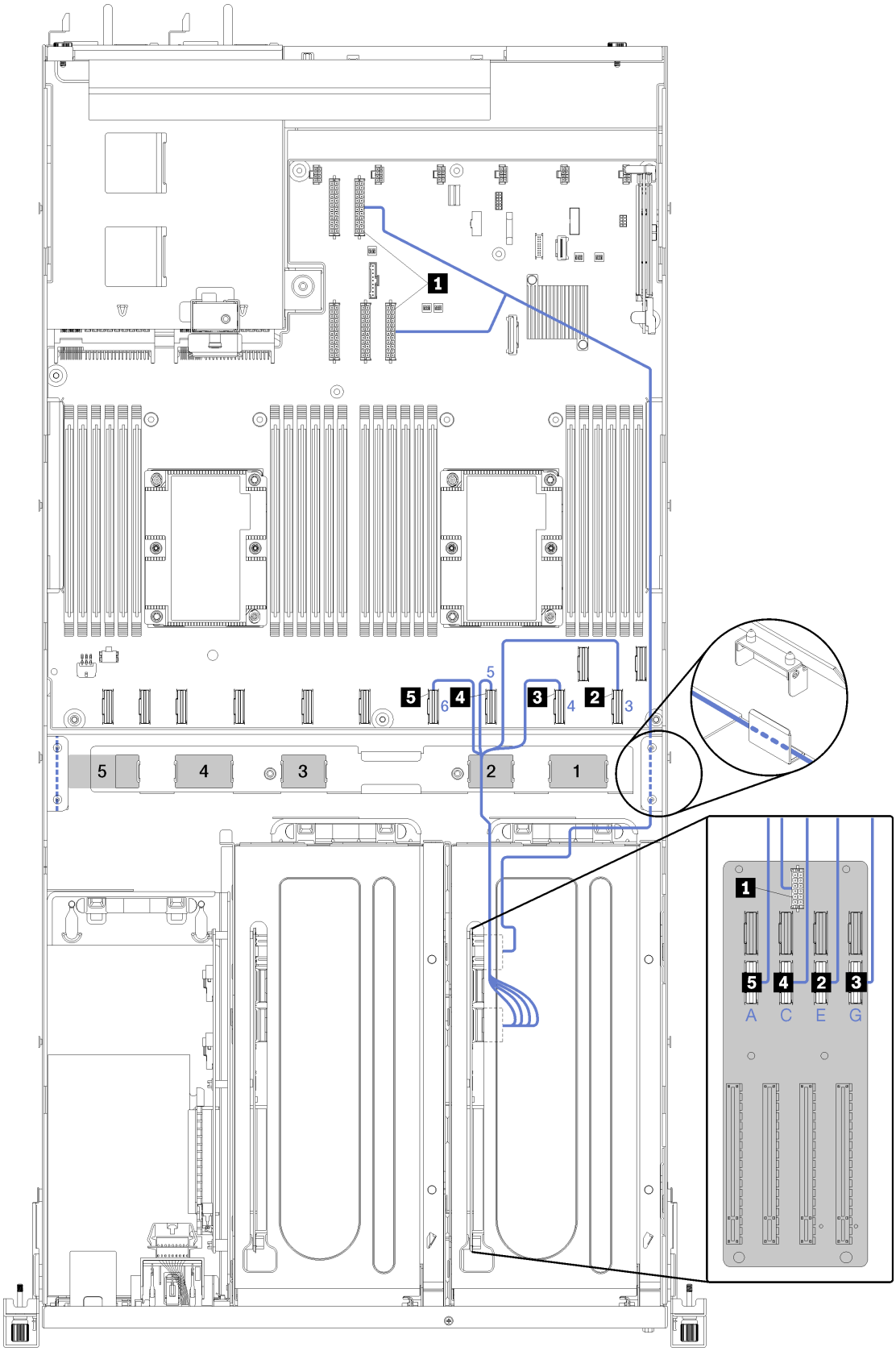

Figure 16. Cable routing for the 4-slot PCIe expansion cage 1

Note: Blue numbers/alphabets represent cable routing pathways under the fan cage.

The PCIe expansion cage power cable is routed through the right cable routing trough (as you are looking from the front of the server). The order of cable placement for cables in the right cable routing trough is as follows:

1. PCIe 13 cable
2. USB cable
3. VGA cable
4. PCIe expansion cage 1 power cable assembly
5. Fan cage power cable. See "Fan cage cable routing" on page 57 for system fan cage routing information.

Cable	From	To
1 PCIe expansion cage 1 power cable (includes cabling for the PCIe expansion cage 1 and the GPU adapters)	Power connector 1 and power connector 3 on the system board.	**Note:** The GPU adapter power cable is routed through the right cable routing trough (as you are looking from the front of the server). Power connector on the PCIe expansion cage 1 card.
2 PCIe adapter slot 4 cable	PCIe connector 4 on the system board.	To PCIe connector G on the PCIe expansion cage 1 expansion card through cable pathway 2.
3 PCIe adapter slot 5 cable	PCIe connector 3 on the system board.	To PCIe connector E on the PCIe expansion cage 1 expansion card through cable pathway 2.
4 PCIe adapter slot 6 cable	PCIe connector 5 on the system board.	To PCIe connector C on the PCIe expansion cage 1 expansion card through cable pathway 2.
5 PCIe adapter slot 7 cable	PCIe connector 6 on the system board.	To PCIe connector A on the PCIe expansion cage 1 expansion card through cable pathway 2.

Video and USB cable routing

Use the section to understand the cable routing for video and USB ports.

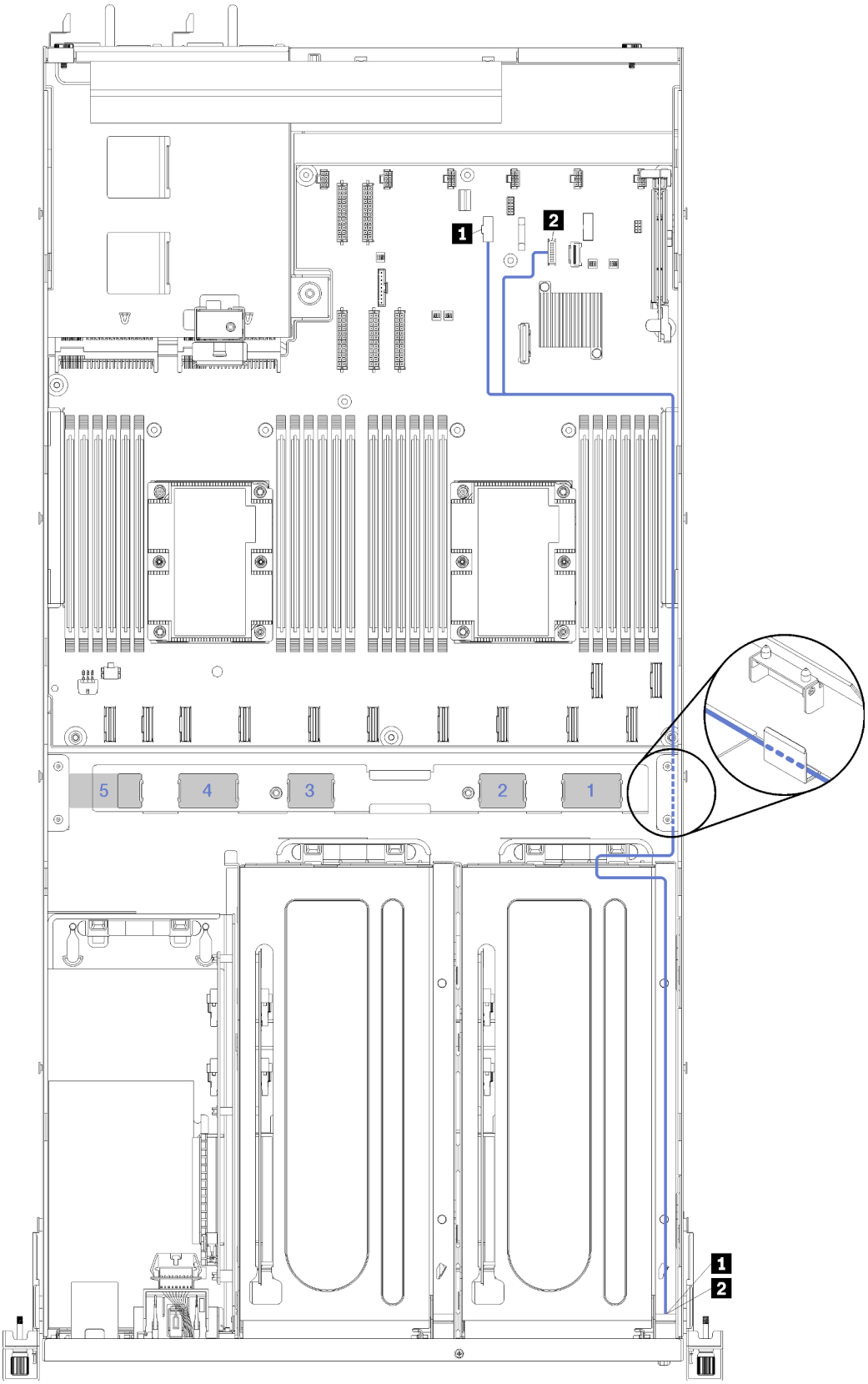

Figure 17. Cable routing for Video and USB cabling

Note: Blue numbers represent cable routing pathways under the fan cage.

The video cable (VGA) and USB cable are routed through the right cable routing trough (as you are looking from the front of the server). The order of cable placement for cables in the right cable routing trough is as follows:

1. PCIe 13 cable
2. USB cable
3. VGA cable
4. PCIe expansion cage 1 power cable assembly. See "3-slot PCIe expansion cage 1 cable routing" on page 35 for PCIe expansion cage 1 cable routing.
5. Fan cage power cable. See "Fan cage cable routing" on page 57 for system fan cage routing information.

Cable	From	To
1 Video cable	Front panel video connector on the system board. **Note:** Route the cable through the right cable routing trough and around the PCH heat sink before connecting the cable to the front panel VGA connector on the system board.	Front video port.
2 USB 3.0 + USB 2.0 cable	Front panel USB connector on the system board.	Front USB 3.0 Port and USB 2.0 port.

3-slot PCIe expansion cage 2 cable routing

Use the section to understand the cable routing for the 3-slot PCIe expansion cage 2.

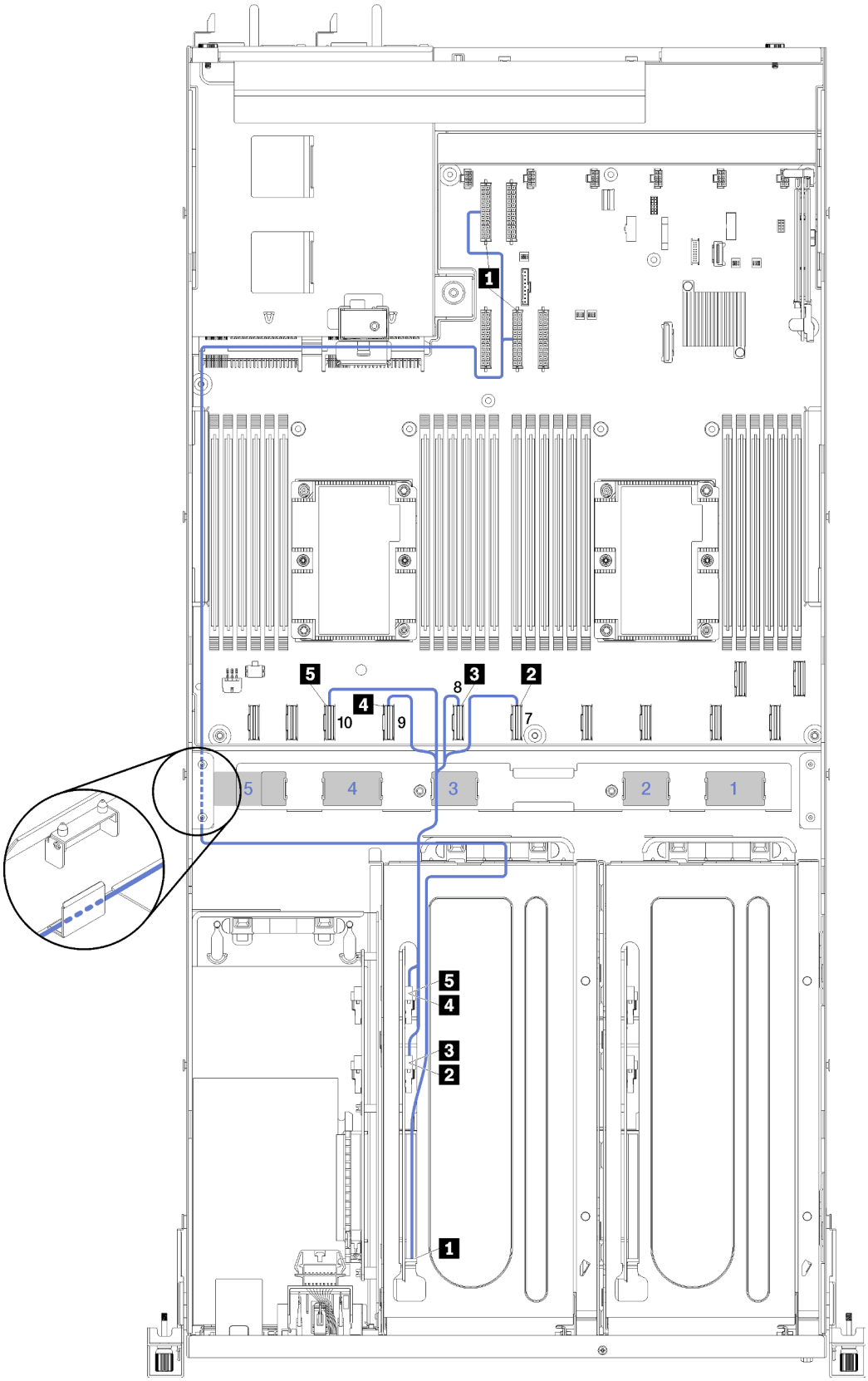

Figure 18. Cable routing for the 3-slot PCIe expansion cage 2

Note: Blue numbers represent cable routing pathways under the fan cage.

The PCIe expansion cage 2 power cable assembly is routed through the left cable routing trough (as you are looking from the front of the server) and through the rear cable routing guide. The order of cable placement for cables in the left cable routing trough is as follows:

1. Management port cable
2. Operator panel cable
3. PCIe expansion cage 2 power cable assembly.
4. RAID adapter SAS signal cables (if installed)

The order of cable placement in the rear cable routing guide is as follows:

1. Management port cable
2. Operator panel cable
3. PCIe expansion cage 2 power cable assembly.

Cable	From	To
1 PCIe expansion cage 2 power cable (includes cabling for the PCIe expansion cage and both GPU adapters)	Power connector 2 and power connector 4 on the system board.	**Note:** The GPU adapter power cable is routed through the left cable routing trough (as you are looking from the front of the server) through the rear cable routing guide. • Power connector on the PCIe expansion cage 2 card. • GPU adapter in slot 5. • GPU adapter in slot 6.
2 PCIe 7 cable	PCIe connector 7 on the system board.	To PCIe connector A on the PCIe expansion cage 2 expansion card through cable pathway 3.
3 PCIe 8 cable	PCIe connector 8 on the system board.	To PCIe connector B on the PCIe expansion cage 2 expansion card through cable pathway 3.
4 PCIe 9 cable	PCIe connector 9 on the system board.	To PCIe connector E on the PCIe expansion cage 2 expansion card through cable pathway 3.
5 PCIe 10 cable	PCIe connector 10 on the system board.	To PCIe connector F on the PCIe expansion cage 2 expansion card through cable pathway 3

4-slot PCIe expansion cage 2 cable routing

Use the section to understand the cable routing for the 4-slot PCIe expansion cage 2.

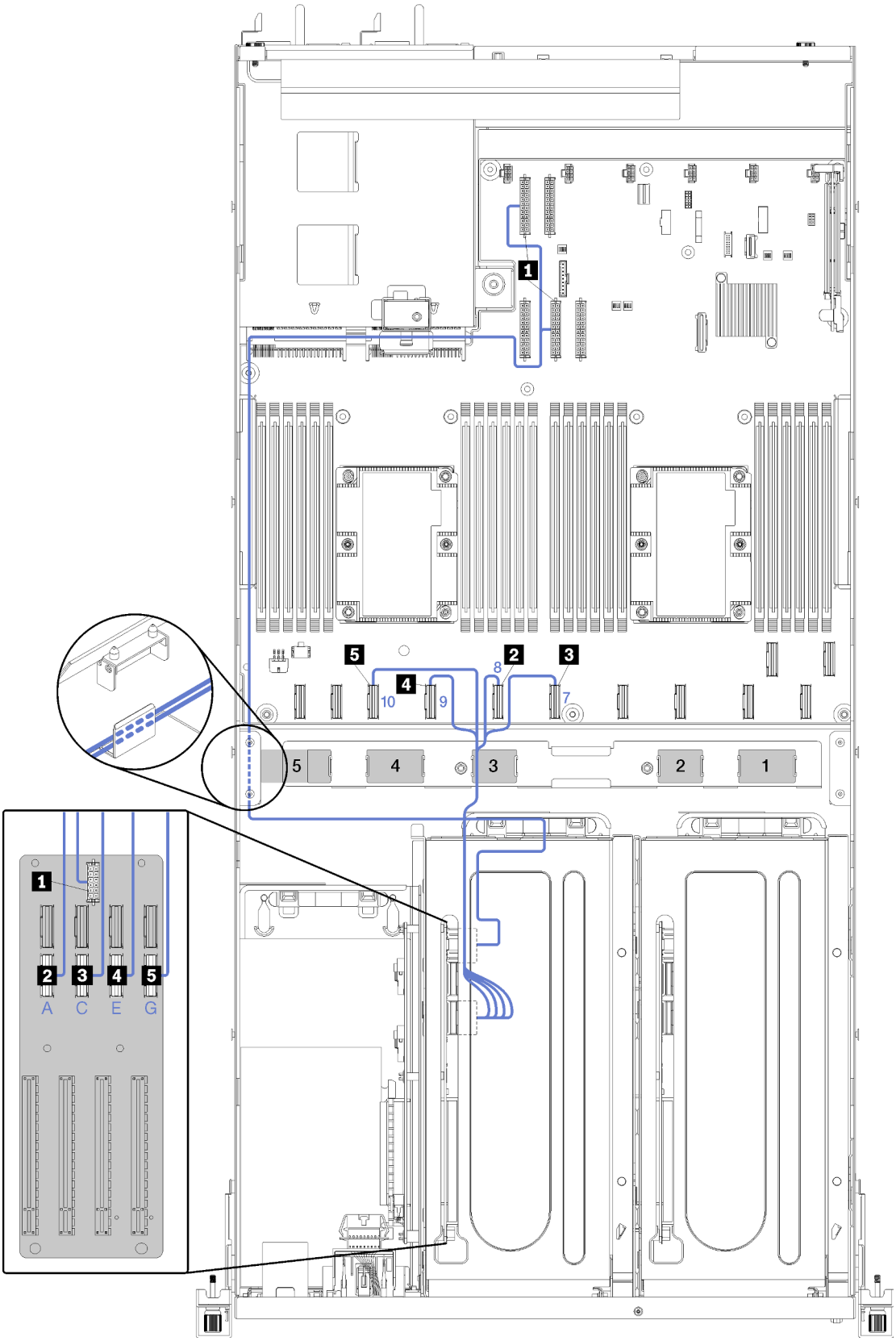

Figure 19. Cable routing for the 4-slot PCIe expansion cage 2

Note: Blue numbers/alphabets represent cable routing pathways under the fan cage.

The PCIe expansion cage 2 power cable assembly is routed through the left cable routing trough (as you are looking from the front of the server) and through the rear cable routing guide. The order of cable placement for cables in the left cable routing trough is as follows:

1. Management port cable
2. Operator panel cable
3. PCIe expansion cage 2 power cable assembly.
4. RAID adapter SAS signal cables (if installed)

The order of cable placement in the rear cable routing guide is as follows:

1. Management port cable
2. Operator panel cable
3. PCIe expansion cage 2 power cable assembly.

Cable	From	To
1 PCIe expansion cage 2 power cable (includes cabling for the PCIe expansion cage and the GPU adapters)	Power connector 2 and power connector 4 on the system board.	**Note:** The GPU adapter power cable is routed through the left cable routing trough (as you are looking from the front of the server) through the rear cable routing guide. Power connector on the PCIe expansion cage 2 card.
2 PCIe adapter slot 8 cable	PCIe connector 10 on the system board.	To PCIe connector G on the PCIe expansion cage 2 expansion card through cable pathway 3.
3 PCIe adapter slot 9 cable	PCIe connector 9 on the system board.	To PCIe connector E on the PCIe expansion cage 2 expansion card through cable pathway 3.
4 PCIe adapter slot 10 cable	PCIe connector 7 on the system board.	To PCIe connector C on the PCIe expansion cage 2 expansion card through cable pathway 3.
5 PCIe adapter slot 11 cable	PCIe connector 8 on the system board.	To PCIe connector A on the PCIe expansion cage 2 expansion card through cable pathway 3

Drive cage cable routing (onboard RAID controller)

Use this section to understand the drive cage cable routing if you are using the onboard RAID controller to manage the drives.

Note: If you order a SATA signal cable option, use these instructions to understand how to install the cable.

If a RAID adapter is installed, see "RAID adapter cable routing" on page 53 for the correct cable routing to the drive cage backplane.

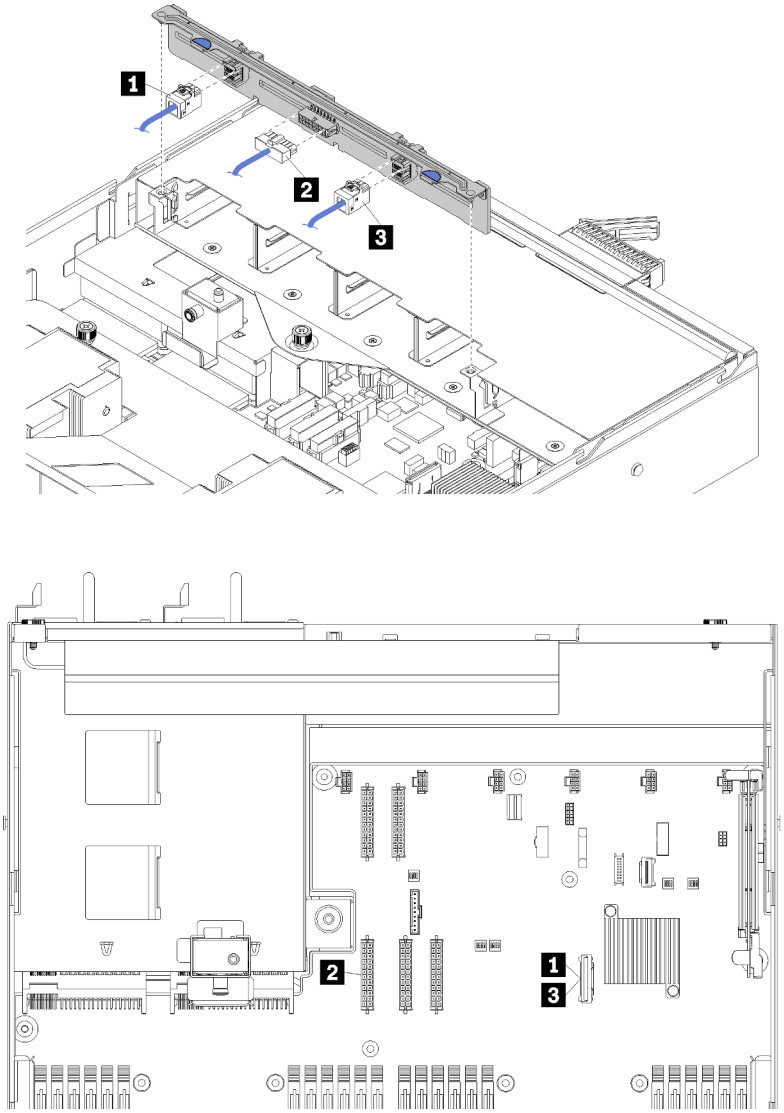

Figure 20. Drive cage cable routing

Cable	From	To
1, 3 SATA signal cable	SATA connector on the system board.	SAS 0 and SAS 1 connectors on the backplane.
2 Power cable	Backplane power connector 5 on the system board.	Power connector on the backplane.

RAID adapter cable routing

Use this section to understand the hard drive cable routing if a RAID adapter is installed.

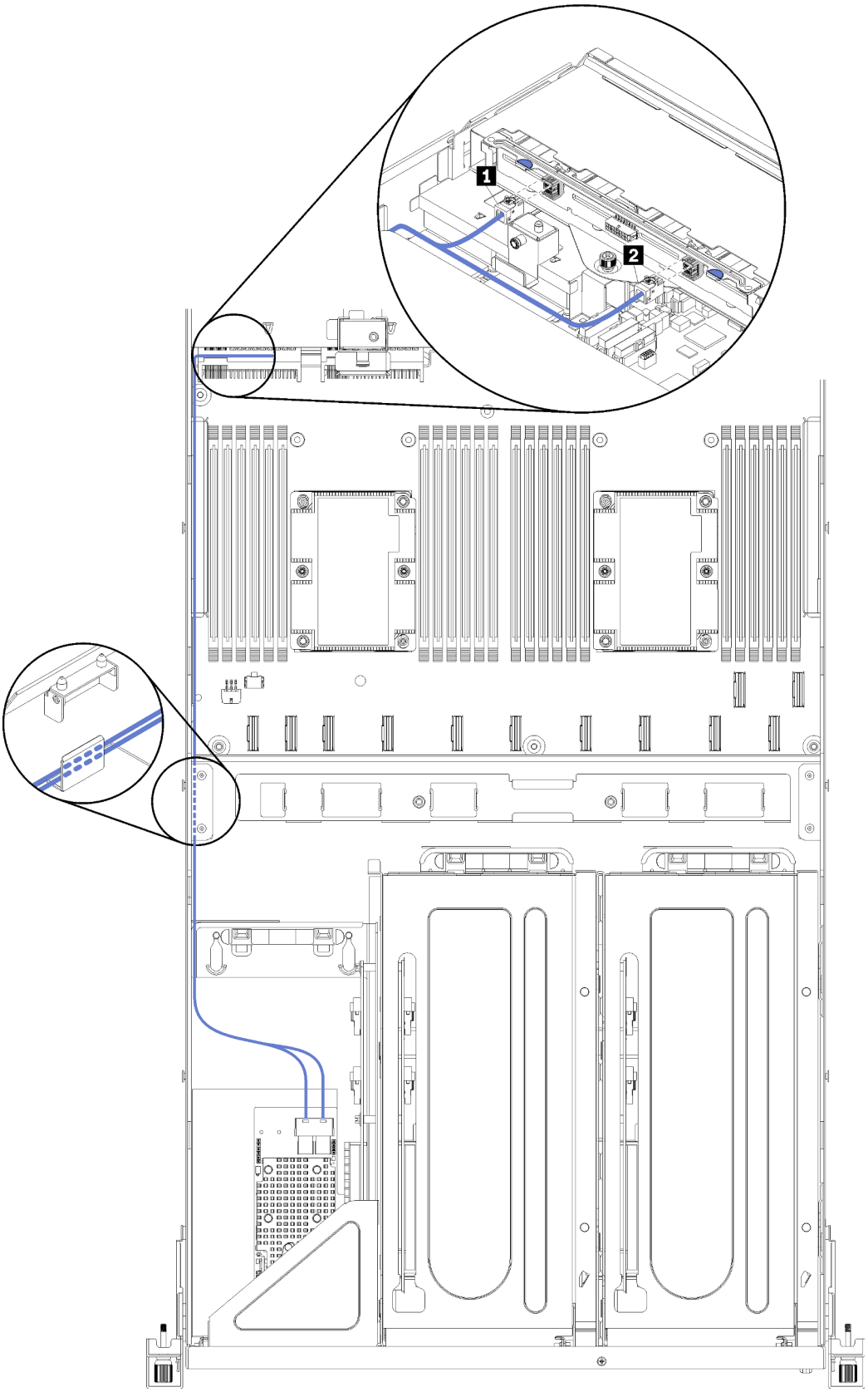

Figure 21. Drive cage cable routing

The RAID adapter SAS signal cables are routed through the left cable routing trough (as you are looking from the front of the server). The order of cable placement for cables in the left cable routing trough is as follows:

1. Management port cable
2. Operator panel cable
3. PCIe expansion cage 2 power cable assembly. See "3-slot PCIe expansion cage 2 cable routing" on page 44 for PCIe expansion cage 2 cable routing.
4. RAID adapter SAS signal cables

Cable	From	To
1, 2 SAS signal cable	SAS connectors on the RAID adapter.	SAS 0 and SAS 1 connectors on the backplane.

Fan cage cable routing

Use this section to understand the fan cage cable routing

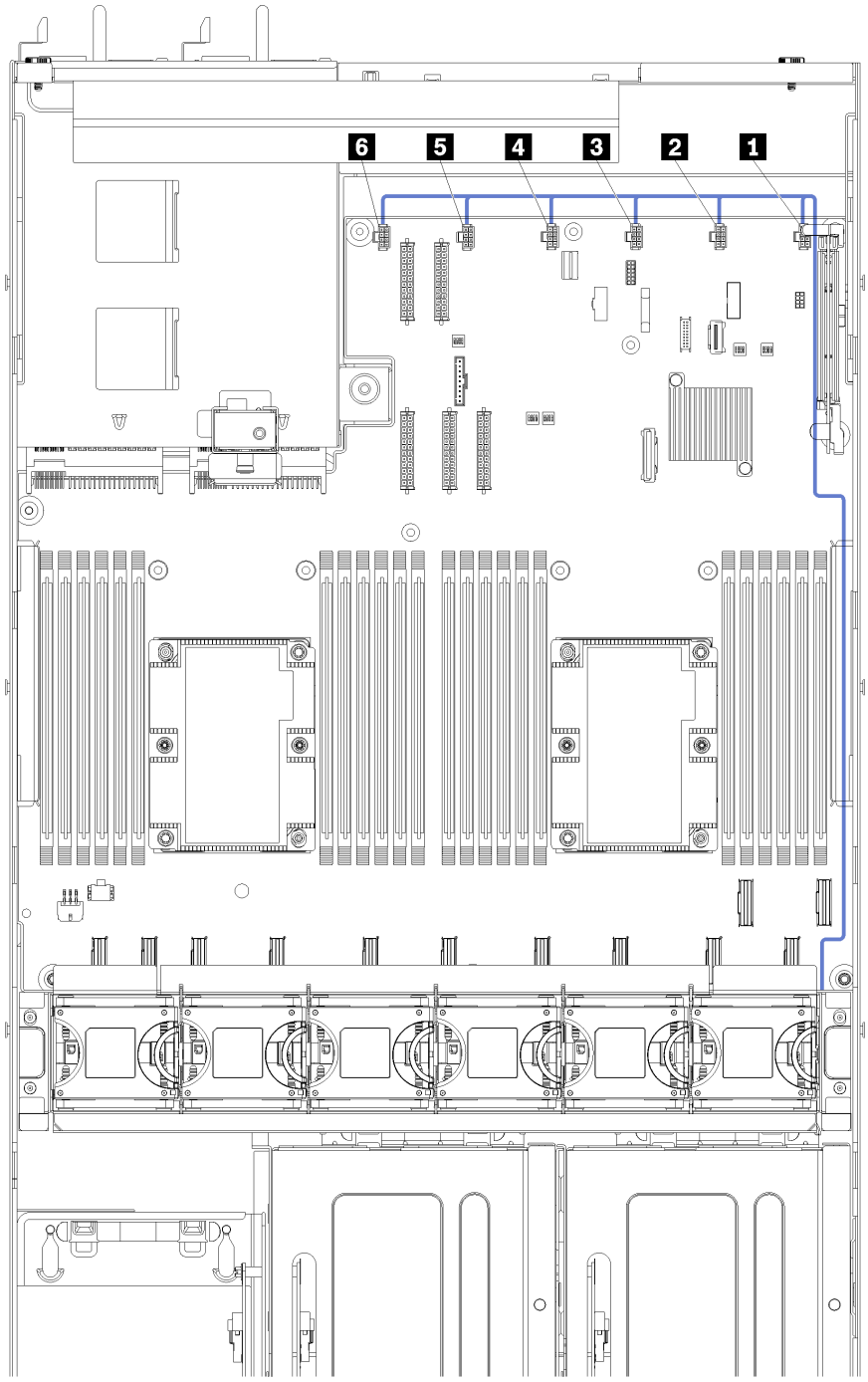

Figure 22. Fan cage cable routing

The fan cage power cable is routed through the right cable routing trough (as you are looking from the front of the server). The order of cable placement for cables in the right cable routing trough is as follows:

1. PCIe 13 cable
2. USB cable

3. VGA cable
4. PCIe expansion cage 1 power cable assembly. See “3-slot PCIe expansion cage 1 cable routing” on page 35 for PCIe expansion cage 1 cable routing.
5. Fan cage power cable. See “Fan cage cable routing” on page 57 for system fan cage cable routing.

Cable	From	To
1 Power cable	The six fan connectors on the system board. Make sure that you match the number on the cable with the connector on the system board.	The fan cage through the right cable routing trough (as you are looking from the front of the server). **Note:** The power cable should be the topmost cable routed through the cable routing trough.

Parts list

Use the parts list to identify each of the components that are available for your server.

For more information about ordering the parts shown in Figure 23 “Server components” on page 59:

http://datacentersupport.lenovo.com/us/en/products/servers/thinksystem/sr670/7Y37/parts

Note: Depending on the model, your server might look slightly different from the illustration.

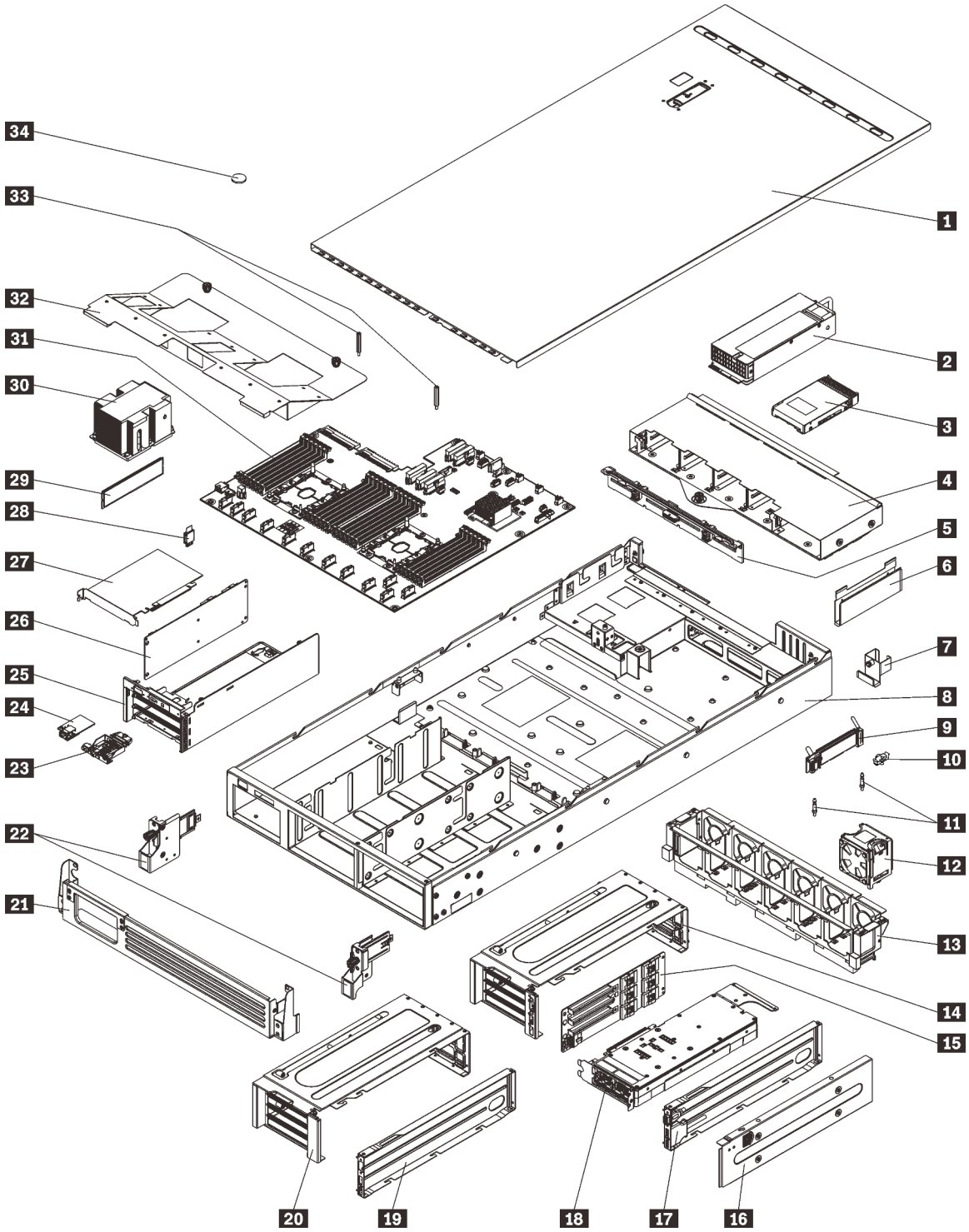

Figure 23. Server components

The parts listed in the following table are identified as one of the following:

- **Tier 1 customer replaceable unit (CRU):** Replacement of Tier 1 CRUs is your responsibility. If Lenovo installs a Tier 1 CRU at your request with no service agreement, you will be charged for the installation.
- **Tier 2 customer replaceable unit (CRU):** You may install a Tier 2 CRU yourself or request Lenovo to install it, at no additional charge, under the type of warranty service that is designated for your server.

- **Field replaceable unit (FRU):** FRUs must be installed only by trained service technicians.
- **Consumable and Structural parts:** Purchase and replacement of consumable and structural parts is your responsibility. If Lenovo acquires or installs a structural component at your request, you will be charged for the service.

Table 15. Parts list

Index	Description	Tier 1 CRU	Tier 2 CRU	FRU	Consumable and Structural parts
For more information about ordering the parts shown in Figure 23 “Server components” on page 59: http://datacentersupport.lenovo.com/us/en/products/servers/thinksystem/sr670/7Y37/parts					
1	Top cover	√			
2	Power supply (up to two power supplies)	√			
3	2.5-inch hard drive (up to eight hard drives)	√			
4	Drive cage		√		
5	Hard drive backplane		√		
6	Cable routing trough (there are two of them)	√			
7	Rear cable guide	√			
8	Server chassis			√	
9	M.2 backplane		√		
10	M.2 retainer clip	√			
11	M.2 guideposts			√	
12	System fan (up to six fans)	√			
13	System fan cage	√			
14, 20	PCIe expansion cage (there are two of them).			√	
15, 26	Expansion cage card (the same card can be installed in the PCIe expansion cages and the I/O expansion cage			√	
16	PCIe expansion cage cover	√			
17, 19	PCIe expansion cage cable tray (a video port and USB port assembly can be installed in PCIe expansion cage 1)	√			
18	Graphics Processing Unit (GPU adapter)			√	
21	Shipping bracket				√
22	Rack latches (left and right)	√			
23	Operator panel		√		

Table 15. Parts list (continued)

Index	Description	Tier 1 CRU	Tier 2 CRU	FRU	Consumable and Structural parts
24	Management port	√			
25	I/O expansion cage			√	
27	PCIe adapter		√		
28	TPM card (for Chinese Mainland only)			√	
29	DIMM (up to 24 can be installed)	√			
30	Processor / Heat sink			√	
31	System board			√	
32	Air baffle	√			
33	Air baffle posts	√			
34	CMOS battery				√

Power cords

Several power cords are available, depending on the country and region where the server is installed.

To view the power cords that are available for the server:

1. Go to:

   http://dcsc.lenovo.com/#/
2. Click **Preconfigured Model** or **Configure to order**.
3. Enter the machine type and model for your server to display the configurator page.
4. Click **Power → Power Cables** to see all line cords.

Notes:

- For your safety, a power cord with a grounded attachment plug is provided to use with this product. To avoid electrical shock, always use the power cord and plug with a properly grounded outlet.
- Power cords for this product that are used in the United States and Canada are listed by Underwriter's Laboratories (UL) and certified by the Canadian Standards Association (CSA).
- For units intended to be operated at 115 volts: Use a UL-listed and CSA-certified cord set consisting of a minimum 16 AWG, Type SVT or SJT, three-conductor cord, a maximum of 15 feet in length and a parallel blade, grounding-type attachment plug rated 15 amperes, 125 volts.
- For units intended to be operated at 230 volts (U.S. use): Use a UL-listed and CSA-certified cord set consisting of a minimum 16 AWG, Type SVT or SJT, three-conductor cord, a maximum of 15 feet in length and a tandem blade, grounding-type attachment plug rated 15 amperes, 250 volts.
- For units intended to be operated at 230 volts (outside the U.S.): Use a cord set with a grounding-type attachment plug. The cord set should have the appropriate safety approvals for the country in which the equipment will be installed.
- Power cords for a specific country or region are usually available only in that country or region.

Chapter 3. Hardware replacement procedures

This section provides installation and removal procedures for all serviceable system components. Each component replacement procedure references any tasks that need to be performed to gain access to the component being replaced.

For more information about ordering parts:

http://datacentersupport.lenovo.com/us/en/products/servers/thinksystem/sr670/7Y37/parts

Note: If you replace a part, such as an adapter, that contains firmware, you might also need to update the firmware for that part. For more information about updating firmware, see "Firmware updates" on page 9.

Installation Guidelines

Before installing components in your server, read the installation guidelines.

Before installing optional devices, read the following notices carefully:

- Read the safety information and guidelines to ensure that you work safely.
  - A complete list of safety information for all products is available at:

    https://pubs.lenovo.com/safety_documentation/
  - The following guidelines are available as well: "Handling static-sensitive devices" on page 64 .
- Make sure the components you are installing are supported by the server. For a list of supported optional components for the server, see https://serverproven.lenovo.com.
- When you install a new server, download and apply the latest firmware. This will help ensure that any known issues are addressed, and that your server is ready to work with optimal performance. Go to Product_name Drivers and Software to download firmware updates for your server.

  Important: Some cluster solutions require specific code levels or coordinated code updates. If the component is part of a cluster solution, verify that the latest level of code is supported for the cluster solution before you update the code.
- It is good practice to make sure that the server is working correctly before you install an optional component.
- Keep the working area clean, and place removed components on a flat and smooth surface that does not shake or tilt.
- Do not attempt to lift an object that might be too heavy for you. If you have to lift a heavy object, read the following precautions carefully:
  - Make sure that you can stand steadily without slipping.
  - Distribute the weight of the object equally between your feet.
  - Use a slow lifting force. Never move suddenly or twist when you lift a heavy object.
  - To avoid straining the muscles in your back, lift by standing or by pushing up with your leg muscles.
- Make sure that you have an adequate number of properly grounded electrical outlets for the server, monitor, and other devices.
- Back up all important data before you make changes related to the disk drives.
- Have the following tools available:
  - Phillips #1 and #2 screwdrivers

© Copyright Lenovo 2018, 2021

  - Torx8 and Torx30 screwdrivers.
  - 6mm nut drive tool (hex socket)
- You do not have to turn off the server to remove or install hot-swap power supplies or hot-plug USB devices. However, you must turn off the server before you perform any steps that involve removing or installing adapter cables, and you must disconnect the power source from the server before you perform any steps that involve removing or installing a riser card.
- Blue on a component indicates touch points, where you can grip to remove a component from or install it in the server, open or close a latch, and so on.
- Orange on a component or an orange label on or near a component indicates that the component can be hot-swapped if the server and operating system support hot-swap capability, which means that you can remove or install the component while the server is still running. (Orange can also indicate touch points on hot-swap components.) See the instructions for removing or installing a specific hot-swap component for any additional procedures that you might have to perform before you remove or install the component.
- The Red strip on the drives, adjacent to the release latch, indicates that the drive can be hot-swapped if the server and operating system support hot-swap capability. This means that you can remove or install the drive while the server is still running.

  Note: See the system specific instructions for removing or installing a hot-swap drive for any additional procedures that you might need to perform before you remove or install the drive.
- After finishing working on the server, make sure you reinstall all air baffles, safety shields, guards, labels, and ground wires.

System reliability guidelines

Review the system reliability guidelines to ensure proper system cooling and reliability.

Make sure the following requirements are met:

- When the server comes with redundant power, a power supply must be installed in each power-supply bay.
- Adequate space around the server must be spared to allow server cooling system to work properly. Leave approximately 50 mm (2.0 in.) of open space around the front and rear of the server. Do not place any object in front of the fans.
- For proper cooling and airflow, refit the server cover before you turn the power on. Do not operate the server for more than 30 minutes with the server cover removed, for it might damage server components.
- Cabling instructions that come with optional components must be followed.
- A failed fan must be replaced within 48 hours since malfunction.
- A removed hot-swap drive must be replaced within two minutes after removal.
- A removed hot-swap power supply must be replaced within two minutes after removal.
- The air baffle that comes with the server must be installed when the server starts. Operating the server with a missing air baffle might damage the processors.
- All processor sockets must contain either a socket cover or a processor with heat sink.
- When more than one processor is installed, fan population rules for each server must be strictly followed.

Handling static-sensitive devices

Review these guidelines before you handle static-sensitive devices to reduce the possibility of damage from electrostatic discharge.

Attention: Prevent exposure to static electricity, which might lead to system halt and loss of data, by keeping static-sensitive components in their static-protective packages until installation, and handling these devices with an electrostatic-discharge wrist strap or other grounding system.

- Limit your movement to prevent building up static electricity around you.
- Take additional care when handling devices during cold weather, for heating would reduce indoor humidity and increase static electricity.
- Always use an electrostatic-discharge wrist strap or other grounding system, particularly when working inside the server with the power on.
- While the device is still in its static-protective package, touch it to an unpainted metal surface on the outside of the server for at least two seconds. This drains static electricity from the package and from your body.
- Remove the device from the package and install it directly into the server without putting it down. If it is necessary to put the device down, put it back into the static-protective package. Never place the device on the server or on any metal surface.
- When handling a device, carefully hold it by the edges or the frame.
- Do not touch solder joints, pins, or exposed circuitry.
- Keep the device from others' reach to prevent possible damages.

Shipping bracket replacement

Use this information to remove and install the shipping bracket.

Note: Make sure that you remove the shipping bracket before you power on the server.

Remove the shipping bracket

Use this information to remove the shipping bracket.

Read the Installation Guidelines

To remove the shipping bracket, complete the following steps:

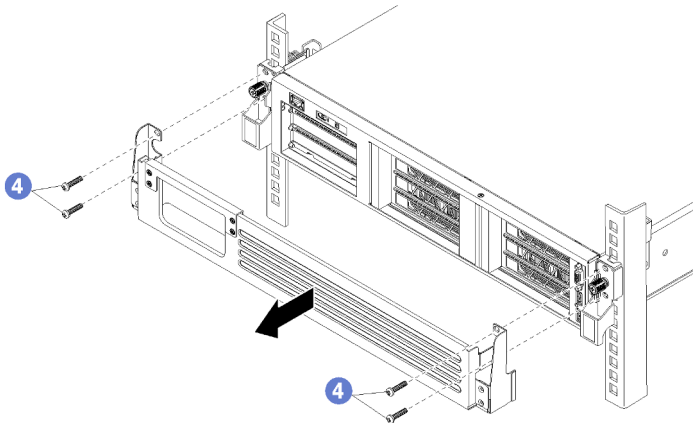

Figure 24. Removing the shipping bracket

Step 1. Optionally, disconnect all PCIe cables from the front of the PCIe adapters that are installed in the I/O cage and routed through the opening in the shipping bracket.

Note: You do not need to remove the cables to remove the shipping bracket. Instead, you can remove the four screws that secure the top of the cable opening on the shipping bracket.

Step 2. Remove the four screws that secure the shipping bracket to the server and pull the bracket away from the server.

Install the shipping bracket

Use this information to install the shipping bracket.

Read the Installation Guidelines

To install the shipping bracket, complete the following steps:

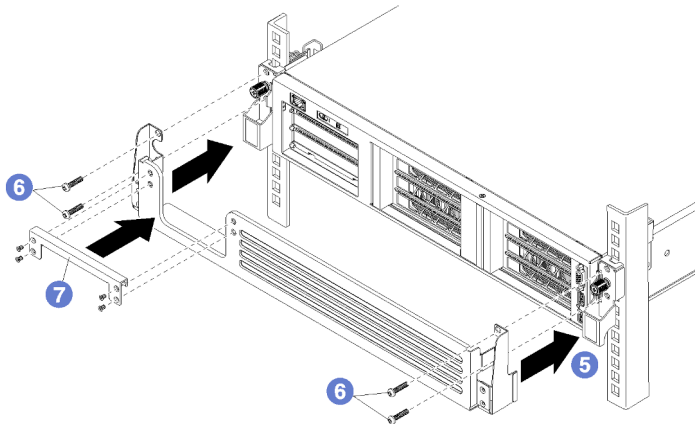

Figure 25. Installing the shipping bracket

Step 1. Optionally, remove the top of the cable opening on the shipping bracket if the server is already cabled.

Step 2. Align the cutouts on each side of the shipping bracket with the thumbscrews on the front of the server.

Step 3. Slide the shipping bracket on to the front of the server, securing it with the four Phillips, M5 x 22 mm screws (silver).

Step 4. If you removed the top of the cable opening, reinstall it. Secure it to the shipping bracket with the four screws.

Note: Make sure that you remove the shipping bracket before you power on the server.

Top cover replacement

Use this information to remove and install the top cover.

Remove the top cover

Use this information to remove the top cover.

S014

CAUTION:
Hazardous voltage, current, and energy levels might be present. Only a qualified service technician is authorized to remove the covers where the label is attached.

S033

CAUTION:
Hazardous energy present. Voltages with hazardous energy might cause heating when shorted with metal, which might result in spattered metal, burns, or both.

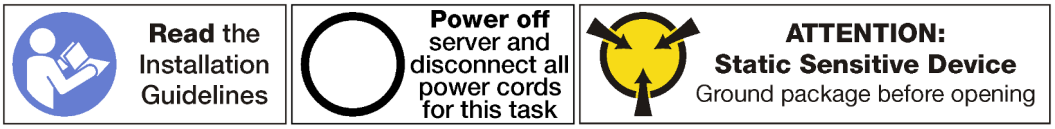

Before removing the top cover, complete the following steps:

1. Power off the server. See "Power off the server" on page 13.
2. Disconnect power cords from both power supplies, which are located in the rear of the server.
3. Record the location of the cables in the front of the PCIe adapters that are installed in the I/O expansion cage at the front of the server, and disconnect the cables.
4. Disconnect the management port cable from the management port in the I/O expansion cage, if necessary.
5. Loosen the two captive screws located on the front of the server. If necessary, use a P2 screwdriver to loosen the screws.
6. Pull the server forward until the slide rails click into place.

To remove the top cover, complete the following steps:

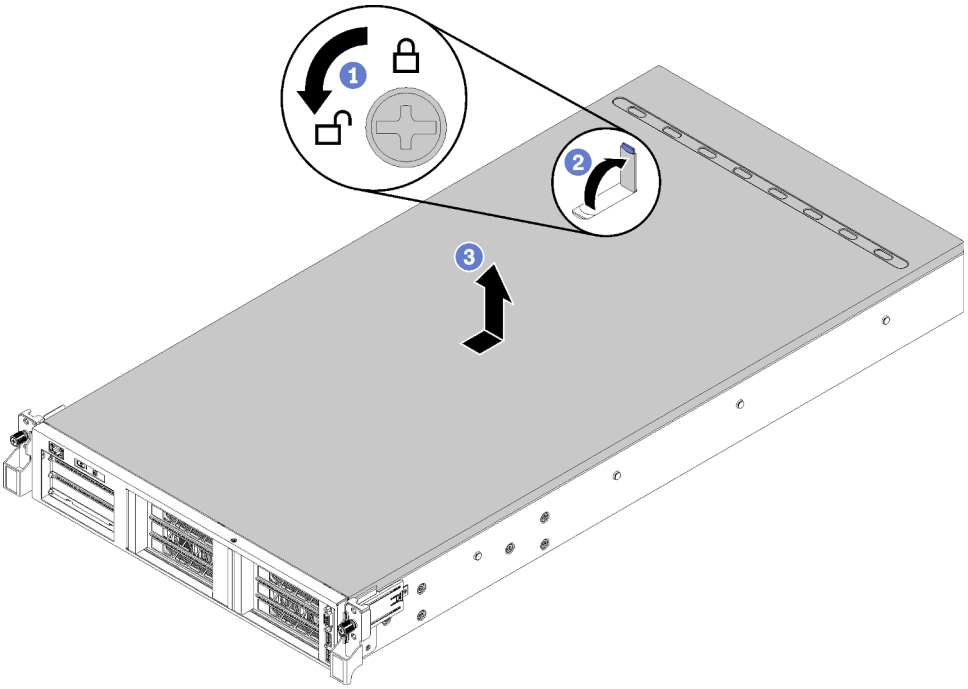

Figure 26. Top cover removal

Step 1. Use a screwdriver to turn the cover lock to the unlocked position.

Step 2. Press the release button on the cover latch and then fully open the cover latch.

Step 3. Slide the top cover to the rear until it is disengaged from the server. Then, lift the top cover off the server and place it on a flat clean surface.

Attention:

- Service labeling is located on the inside of the cover.
- Handle the top cover carefully. Dropping the top cover with the cover latch open might damage the cover latch.
- For proper cooling and airflow, install the top cover before you power on the server. Operating the server with the top cover removed might damage server components.

Demo video

Watch the procedure on YouTube

Install the top cover

Use this information to install the top cover.

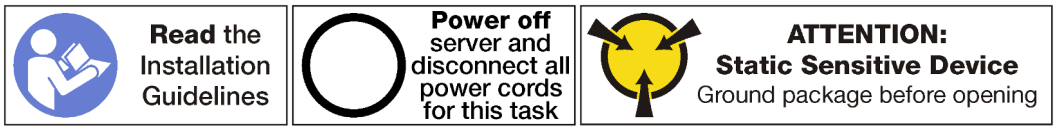

Before you install the top cover:

1. Ensure that all cables, adapters, and other components are installed and seated correctly and that you have not left loose tools or parts inside the server.
2. Ensure that all internal cables are connected and routed correctly. See "Internal cable routing" on page 27.
3. If you are installing a new top cover, attach the service label to the underside of the new top cover first if necessary. The underside of the top cover includes scribe marks to indicate where the service label should be affixed.

   Note: A new top cover comes without a service label attached. If you need a service label, order it together with the new top cover. The service label is free of charge.

To install the top cover, complete the following steps:

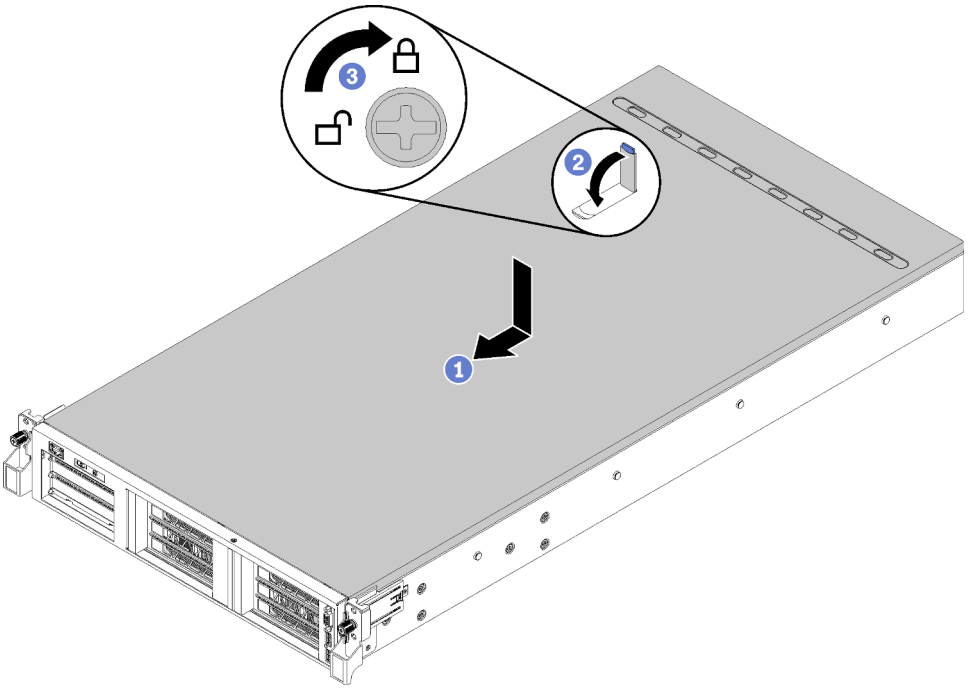

Figure 27. Top cover installation

Note: Before you slide the top cover forward, ensure that all the tabs on the top cover engage the chassis correctly. If the tabs do not engage the chassis correctly, it will be very difficult to remove the top cover later.

Step 1. Ensure that the cover latch is in the open position. Lower the top cover onto the chassis until both sides of the top cover engage the guides on both sides of the chassis.

Step 2. Pivot the cover latch and slide the top cover to the front of the chassis at the same time until the top cover snaps into position. Ensure that the cover latch is closed and that the cover sits evenly over the server.

Step 3. Optionally, use a screwdriver to turn the cover lock to the locked position.

After installing the top cover, complete the following steps:

1. Push up on the latches on the slide rails and push the server back into the rack.
2. Tighten the two captive screws located on the front of the server to secure the server in the rack.

   Note: Always secure the system in the rack if your are moving the rack.
3. Connect all cables to the ports on the front of the server, including the management port, if necessary, and all PCIe adapter ports. The management port and PCIe adapter ports are located in the I/O expansion cage.
4. Connect power cords to both power supplies, which are located at the rear of the server.

Demo video

Watch the procedure on YouTube

Air baffle replacement

Use this information to remove and install the air baffle.

Remove the air baffle

Use this information to remove the air baffle.

Before removing the air baffle:

1. Power off the server. See "Power off the server" on page 13.
2. Disconnect power cords from both power supplies, which are located in the rear of the server.
3. Record the location of the cables in the front of the PCIe adapters that are installed in the I/O expansion cage at the front of the server, and disconnect the cables.
4. Disconnect the management port cable from the management port in the I/O expansion cage, if necessary.
5. Loosen the two captive screws located on the front of the server. If necessary, use a P2 screwdriver to loosen the screws.
6. Pull the server forward until the slide rails click into place.
7. Remove the top cover. See "Remove the top cover" on page 67.

To remove the air baffle, complete the following steps:

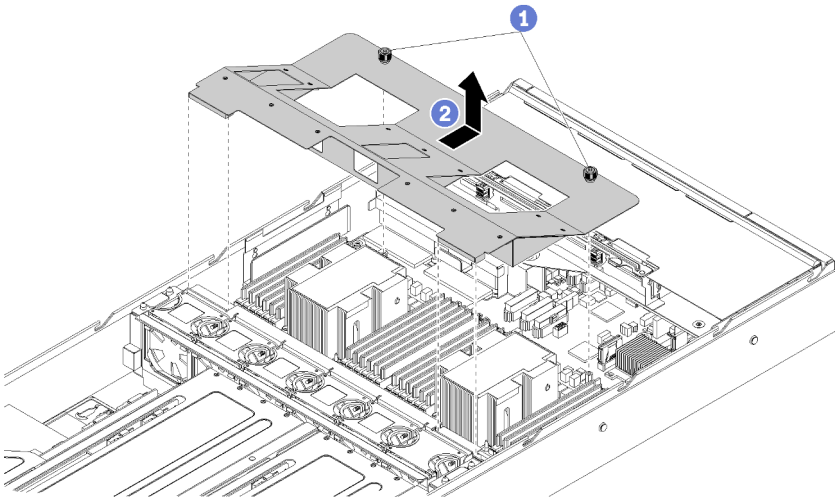

Figure 28. Removing the air baffle

Step 1. Loosen the two captive screws on the air baffle.

Step 2. Push the air baffle toward the rear of the server; then, grasp the air baffle and carefully lift it out of the server.

Attention: For proper cooling and airflow, install the air baffle before you power on the server. Operating the server with the air baffle removed might damage server components.

Demo video

Watch the procedure on YouTube

Install the air baffle

Use this information to install the air baffle.

Before installing the air baffle:

1. Ensure that no tools or loose screws are left inside your server.
2. Ensure that all components have been reassembled correctly.
3. Ensure that all cables inside the server have been properly routed and they will not interfere with installing the air baffle.

To install the air baffle, complete the following steps:

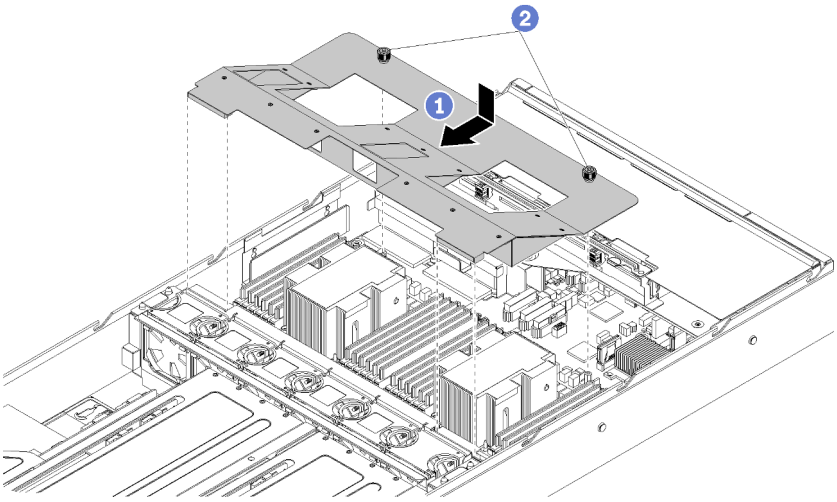

Figure 29. Installation of the air baffle

Step 1. Align the air baffle openings around the heatsinks such that the front left and right tabs overlap the fan cage and the captive screws can be inserted into the support posts. Then, lower the air baffle into the chassis and push the air baffle into place.

Step 2. Tighten the two captive screws to secure the air baffle to the chassis.

After installing the air baffle:

1. Install the top cover. See "Install the top cover" on page 69
2. Push up on the latches on the slide rails and push the server back into the rack.
3. Tighten the two captive screws located on the front of the server to secure the server in the rack.

   Note: Always secure the system in the rack if your are moving the rack.
4. Connect all cables to the ports on the front of the server, including the management port, if necessary, and all PCIe adapter ports. The management port and PCIe adapter ports are located in the I/O expansion cage.
5. Connect power cords to both power supplies, which are located at the rear of the server.

Demo video

Watch the procedure on YouTube

DIMM replacement

Use this information to remove and install a DIMM.

Remove a DIMM

Use this information to remove a DIMM.

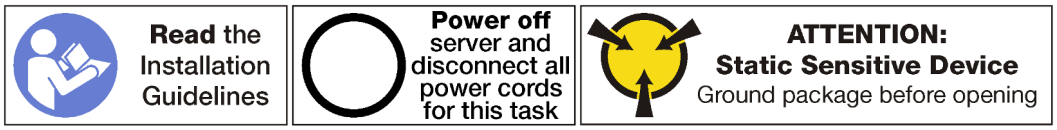

Attention:

- DIMMs are sensitive to static discharge and require special handling. In addition to the standard guidelines for Handling static-sensitive devices:
  - Always wear an electrostatic-discharge strap when removing or installing DIMMs. Electrostatic-discharge gloves can also be used.
  - Never hold two or more DIMMs together so that they touch. Do not stack DIMMs directly on top of each other during storage.
  - Never touch the gold DIMM connector contacts or allow these contacts to touch the outside of the DIMM connector housing.
  - Handle DIMMs with care: never bend, twist, or drop a DIMM.
  - Do not use any metal tools (such as jigs or clamps) to handle the memory modules, because the rigid metals may damage the memory modules.
  - Do not insert memory modules while holding packages or passive components, which can cause package cracks or detachment of passive components by the high insertion force.

Before removing a DIMM:

1. Power off the server. See “Power off the server” on page 13.
2. Disconnect power cords from both power supplies, which are located in the rear of the server.
3. Record the location of the cables in the front of the PCIe adapters that are installed in the I/O expansion cage at the front of the server, and disconnect the cables.
4. Disconnect the management port cable from the management port in the I/O expansion cage, if necessary.
5. Loosen the two captive screws located on the front of the server. If necessary, use a P2 screwdriver to loosen the screws.
6. Pull the server forward until the slide rails click into place.
7. Remove the top cover. See “Remove the top cover” on page 67.
8. Remove the air baffle. See “Remove the air baffle” on page 71.

To remove a DIMM, complete the following steps:

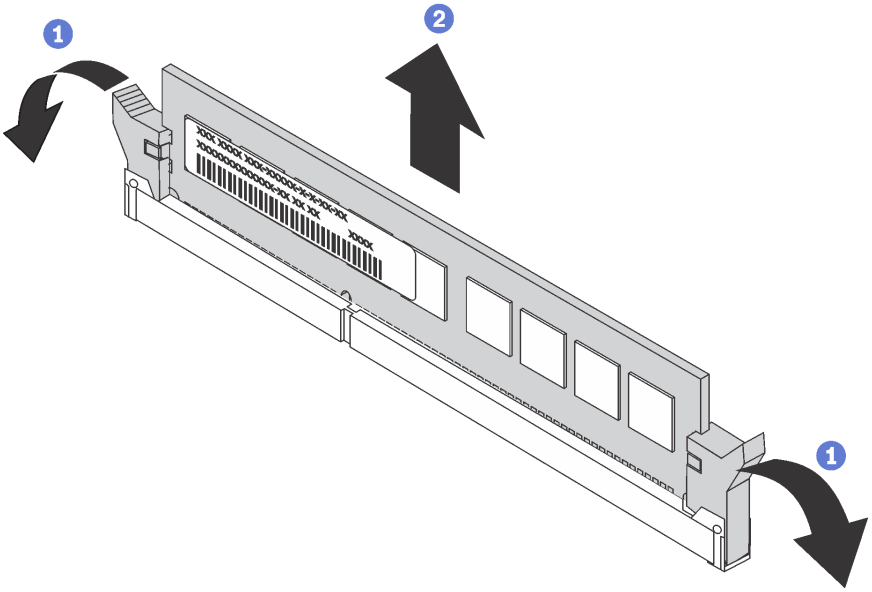

Figure 30. DIMM removal

Step 1. Open the retaining clips on each end of the DIMM slot.

Attention: To avoid breaking the retaining clips or damaging the DIMM slots, handle the clips gently.

Step 2. Grasp the DIMM at both ends and carefully lift it up to remove it from the slot.

If you are instructed to return the old DIMM, follow all packaging instructions and use any packaging materials that are provided.

Demo video

Watch the procedure on YouTube

Memory module installation

The following notes describe the types of DIMMs that the node supports and other information that you must consider when you install DIMMs.

Note: List of supported memory module is different for 1st generation (Skylake) and 2nd generation (Cascade Lake) Intel Xeon processors. Make sure to install compatible memory modules to avoid system error. For a list of supported DIMMs, see: https://serverproven.lenovo.com.

Memory modules must be installed in a specific order based on the memory configuration that you implement on your server.

Your server has 24 memory module slots. It supports up to 12 memory modules when one processor is installed, and up to 24 memory modules when two processors are installed. Supporting memory module type is as follows:

For Intel Xeon Skylake processors:
- Type: TruDDR4 2666, dual-rank, 16 GB/32 GB RDIMM
- Minimum: 128GB
- Maximum: 768GB

For Intel Xeon Cascade Lake processors:

- Type:
  - TruDDR4 2933, dual-rank, 16 GB/32 GB RDIMM
  - TruDDR4 Performance+ 2933, dual-rank, 16 GB/32 GB RDIMM

    Note: Factory-installed only; no field upgrade.
- Minimum: 128GB
- Maximum: 768GB

DRAM installation order

Memory modules must be installed in a specific order based on the memory configuration that you implement on your node.

The following memory configurations are available:

- "Independent mode" on page 75
- "Mirroring mode" on page 76
- "Rank sparing mode" on page 76

The following illustration shows the location of the DIMM connectors on the system board.

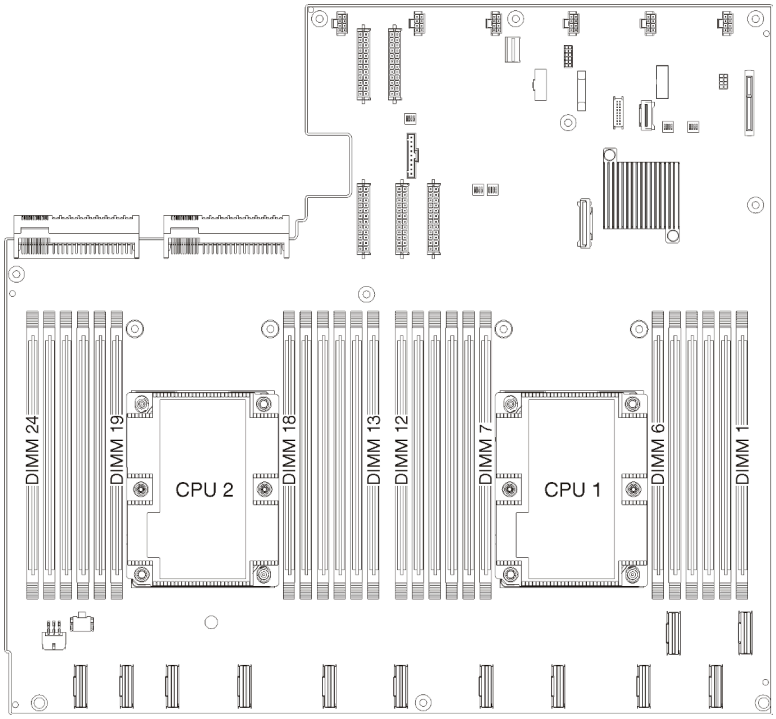

Figure 31. The location of the DIMM connectors on the system board

Independent mode

The independent mode provides high performance memory capability. You can populate all channels with no matching requirements. Individual channels can run at different memory module timings, but all channels must run at the same interface frequency.

Note: All memory modules installed on Product_name must be the same type with the same capacity, frequency, voltage, and ranks.

The following table shows the memory module population sequence for the independent mode when two processors (Processor 1 and Processor 2) are installed.

Table 16. Independent mode with two processors

Independent memory mode																								
Total DIMMs	Processor 1												Processor 2											
	DIMM slot												DIMM slot											
	1	2	3	4	5	6	7	8	9	10	11	12	13	14	15	16	17	18	19	20	21	22	23	24
8			√		√			√		√					√		√			√		√		
12	√		√		√			√		√		√	√		√		√			√		√		√
16			√	√	√	√	√	√	√	√					√	√	√	√	√	√	√	√		
24	√	√	√	√	√	√	√	√	√	√	√	√	√	√	√	√	√	√	√	√	√	√	√	√

Mirroring mode

In the mirroring mode, each memory module in a pair must be identical in size and architecture. The channels are grouped in pairs with each channel receiving the same data. One channel is used as a backup of the other, which provides redundancy.

Note: All memory modules installed on Product_name must be the same type with the same capacity, frequency, voltage, and ranks.

The following table shows the memory module population sequence for the mirroring mode when two processors (Processor 1 and Processor 2) are installed.

Table 17. Mirroring mode with two processors

Mirroring mode																								
Total DIMMs	Processor 1												Processor 2											
	DIMM slot												DIMM slot											
	1	2	3	4	5	6	7	8	9	10	11	12	13	14	15	16	17	18	19	20	21	22	23	24
8			√		√			√		√					√		√			√		√		
12	√		√		√			√		√		√	√		√		√			√		√		√
16			√	√	√	√	√	√	√	√					√	√	√	√	√	√	√	√		
24	√	√	√	√	√	√	√	√	√	√	√	√	√	√	√	√	√	√	√	√	√	√	√	√

Rank sparing mode

In the rank sparing mode, one rank of a memory module works as the spare rank for the other ranks on the same channel. The spare rank is not available as system memory.

Note: All memory modules installed on Product_name must be the same type with the same capacity, frequency, voltage, and ranks.

The following table shows the memory module population sequence for the rank sparing mode when two processors (Processor 1 and Processor 2) are installed.

Table 18. Rank sparing mode with two processors

Rank sparing mode																								
Total DIMMs	Processor 1												Processor 2											
	DIMM slot												DIMM slot											
	1	2	3	4	5	6	7	8	9	10	11	12	13	14	15	16	17	18	19	20	21	22	23	24
8					√	√	√	√									√	√	√	√				
12					√	√	√	√	√	√							√	√	√	√	√	√		
16			√	√	√	√	√	√	√	√					√	√	√	√	√	√	√	√		
24	√	√	√	√	√	√	√	√	√	√	√	√	√	√	√	√	√	√	√	√	√	√	√	√

Install a DIMM

Use this information to install a DIMM.

The Product_name supports memory configurations in capacities of 8, 12, 16, and 24.

All installed DIMMs must be of the same type and capacity.

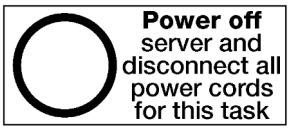

Attention:

- Disconnect both power cords for this task.
- DIMMs are sensitive to static discharge and require special handling. In addition to the standard guidelines for Handling static-sensitive devices:
  - Always wear an electrostatic-discharge strap when removing or installing DIMMs. Electrostatic-discharge gloves can also be used.
  - Never hold two or more DIMMs together so that they touch. Do not stack DIMMs directly on top of each other during storage.
  - Never touch the gold DIMM connector contacts or allow these contacts to touch the outside of the DIMM connector housing.
  - Handle DIMMs with care: never bend, twist, or drop a DIMM.
  - Do not use any metal tools (such as jigs or clamps) to handle the memory modules, because the rigid metals may damage the memory modules.
  - Do not insert memory modules while holding packages or passive components, which can cause package cracks or detachment of passive components by the high insertion force.

Before installing a DIMM, touch the static-protective package that contains the new DIMM to any unpainted surface on the outside of the server. Then, take the new DIMM out of the package and place it on a static-protective surface.

To install a DIMM, complete the following steps:

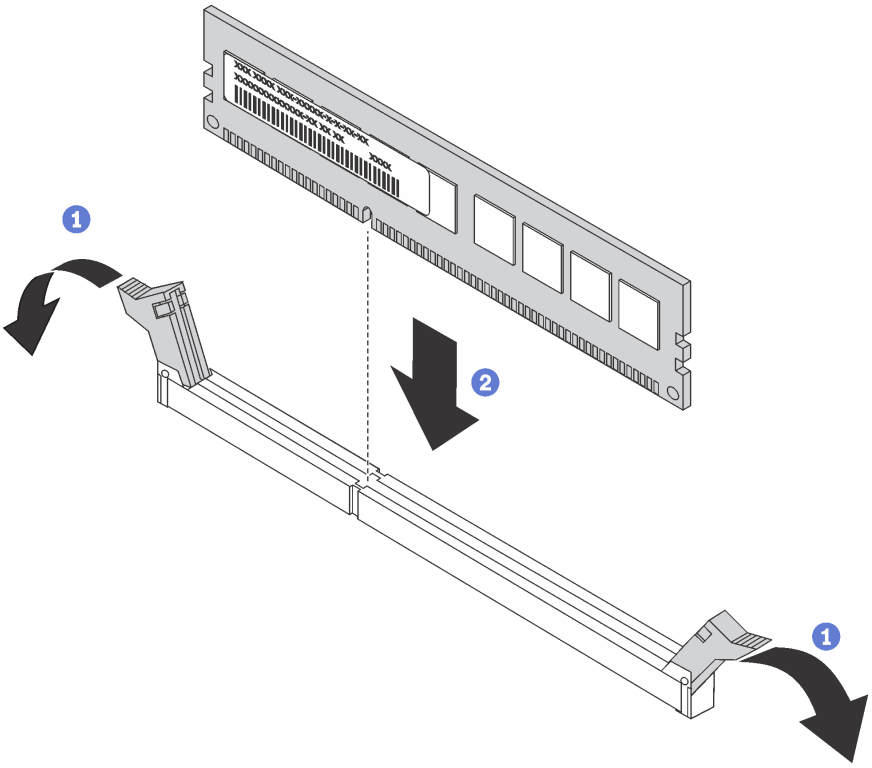

Figure 32. DIMM installation

Step 1. Open the retaining clips on each end of the DIMM slot.

Attention: To avoid breaking the retaining clips or damaging the DIMM slots, open and close the clips gently.

Step 2. Align the DIMM with the slot, and gently place the DIMM on the slot with both hands.

Step 3. Firmly press both ends of the DIMM straight down into the slot until the retaining clips snap into the locked position.

Note: If there is a gap between the DIMM and the retaining clips, the DIMM has not been correctly inserted; open the retaining clips, remove the DIMM, and then reinsert it.

After installing a DIMM:

1. Install the air baffle. See "Install the air baffle" on page 72.
2. Install the top cover. See "Install the top cover" on page 69.
3. Push up on the latches on the slide rails and push the server back into the rack.
4. Tighten the two captive screws located on the front of the server to secure the server in the rack.

   Note: Always secure the system in the rack if your are moving the rack.
5. Connect all cables to the ports on the front of the server, including the management port, if necessary, and all PCIe adapter ports. The management port and PCIe adapter ports are located in the I/O expansion cage.
6. Connect power cords to both power supplies, which are located at the rear of the server.

Demo video

Watch the procedure on YouTube

System fan replacement

Use this information to remove and install a system fan.

Remove a system fan

Use this information to remove a system fan.

Before removing a system fan:

Note: Check the event log to determine which fan is failing.

1. Power off the server. See "Power off the server" on page 13.
2. Disconnect power cords from both power supplies, which are located in the rear of the server.
3. Record the location of the cables in the front of the PCIe adapters that are installed in the I/O expansion cage at the front of the server, and disconnect the cables.
4. Disconnect the management port cable from the management port in the I/O expansion cage, if necessary.
5. Loosen the two captive screws located on the front of the server. If necessary, use a P2 screwdriver to loosen the screws.
6. Pull the server forward until the slide rails click into place.
7. Remove the top cover. See "Remove the top cover" on page 67.
8. Remove the air baffle. See "Remove the air baffle" on page 71.

To remove a system fan, complete the following steps:

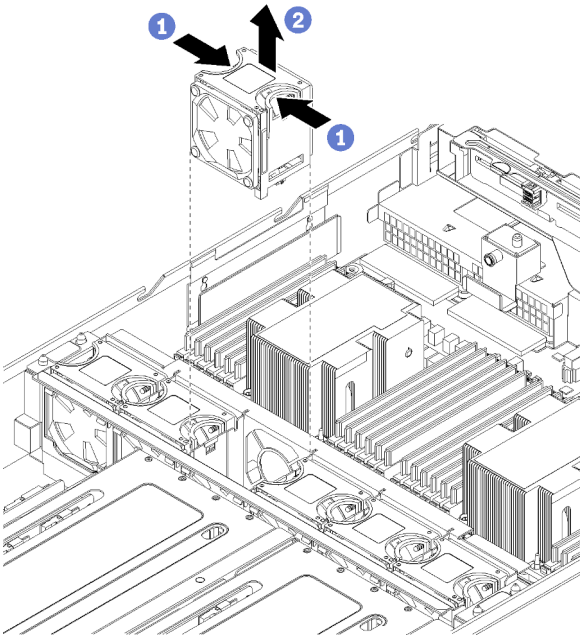

Figure 33. System fan removal

Step 1. Grasp the handles on the top of the system fan with your fingers, and pinch the handles together.

Step 2. Lift the system fan out of the server.

After removing the system fan, install a new system fan or install a fan filler to cover the place. See "Install a system fan" on page 80.

Demo video

Watch the procedure on YouTube

Install a system fan

Use this information to install a system fan.

Before installing a system fan, touch the static-protective package that contains the new system fan to any unpainted surface on the outside of the server. Then, take the new system fan out of the package and place it on a static-protective surface.

To install a system fan, complete the following steps:

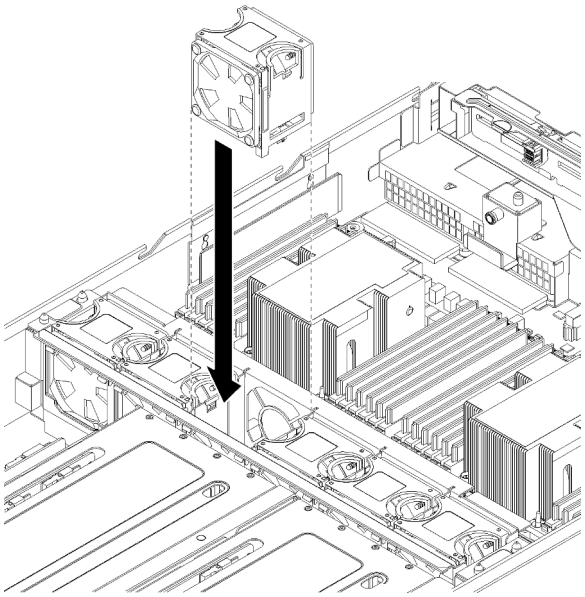

Figure 34. System fan installation

Step 1. Position the system fan above the system fan bay in the system fan cage. Make sure that the Airflow label on the top of the system fan points toward the rear of the server, and that the connector on the bottom of the system fan aligns with the connector on the chassis.

Step 2. Press the system fan straight down until it is seated firmly into place. You will hear a click with the system fan is seated firmly.

After installing the system fan:

1. Install the air baffle. See "Install the air baffle" on page 72.
2. Install the top cover. See "Install the top cover" on page 69.
3. Push up on the latches on the slide rails and push the server back into the rack.
4. Tighten the two captive screws located on the front of the server to secure the server in the rack.

   Note: Always secure the system in the rack if your are moving the rack.
5. Connect all cables to the ports on the front of the server, including the management port, if necessary, and all PCIe adapter ports. The management port and PCIe adapter ports are located in the I/O expansion cage.
6. Connect power cords to both power supplies, which are located at the rear of the server.

Demo video

Watch the procedure on YouTube

System fan cage replacement

Use this information to remove and install the system fan cage.

Remove the system fan cage

Use this information to remove the system fan cage.

Read the Installation Guidelines	**Power off** server and disconnect all power cords for this task	**ATTENTION: Static Sensitive Device** Ground package before opening

Before removing the system fan cage:

1. Power off the server. See "Power off the server" on page 13.
2. Disconnect power cords from both power supplies, which are located in the rear of the server.
3. Record the location of the cables in the front of the PCIe adapters that are installed in the I/O expansion cage at the front of the server, and disconnect the cables.
4. Disconnect the management port cable from the management port in the I/O expansion cage, if necessary.
5. Loosen the two captive screws located on the front of the server. If necessary, use a P2 screwdriver to loosen the screws.
6. Pull the server forward until the slide rails click into place.
7. Remove the top cover. See "Remove the top cover" on page 67.
8. Remove the air baffle. See "Remove the air baffle" on page 71.
9. If you are replacing a system fan cage, remove the drive cage to disconnect the system fan cage power cable assembly from the system board. See "Remove the drive cage" on page 137.

   Note: For some procedures, such as removing or installing the I/O expansion cage or the PCIe expansion cage, you will need to disconnect the system fan cage from the server chassis and temporarily move it out of the way. However, you do not need to completely remove the system fan cage from the server chassis.

To remove the system fan cage, complete the following steps:

Step 1. Remove the system fans in fan bays 2 and 4. See "Remove a system fan" on page 79.

Step 2. Loosen the captive screws in fan bays 2 and 4 using a P2 screwdriver.

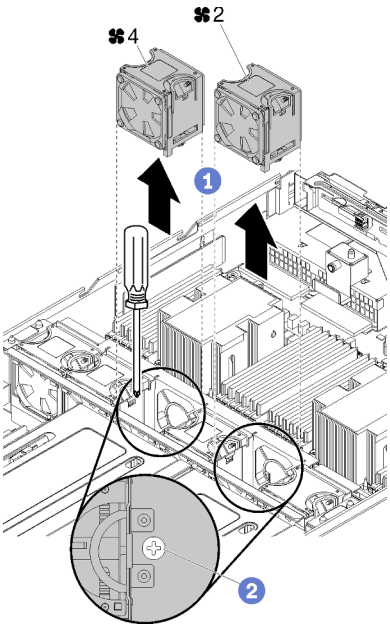

Figure 35. Loosening the captive screws that secure the fan cage

Step 3. If you are replacing the system fan cage, complete the following steps:

a. Make sure that you have removed the drive cage. See “Remove the drive cage” on page 137.

b. Disconnect the fan power cable connections (fan connectors 1 through 6) from the system board.

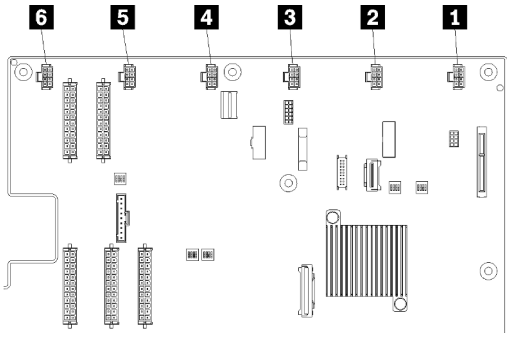

Figure 36. Location of the system fan cage connectors

c. Remove the fan power cable from the cable routing trough on the left side of the server (as you are looking at the server) and set it to the side of the server chassis.

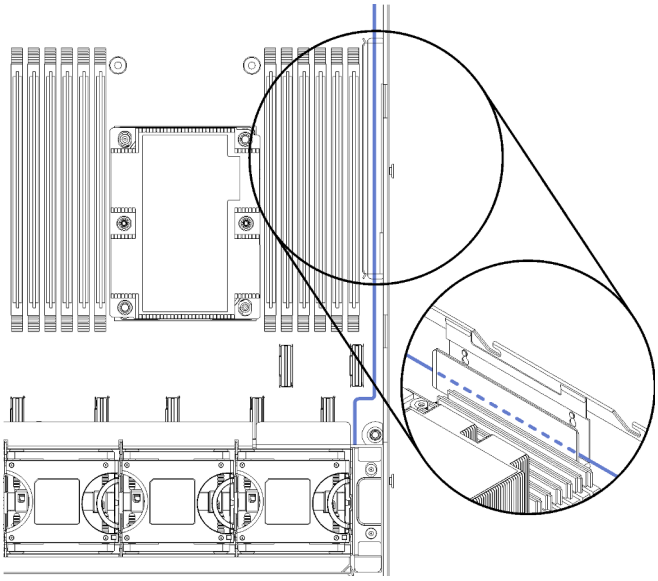

Figure 37. Fan power cable routing through left cable routing trough

Step 4. Lift the system fan cage straight up. Unless you are replacing the system fan cage, carefully place the fan cage on top of the drive cage.

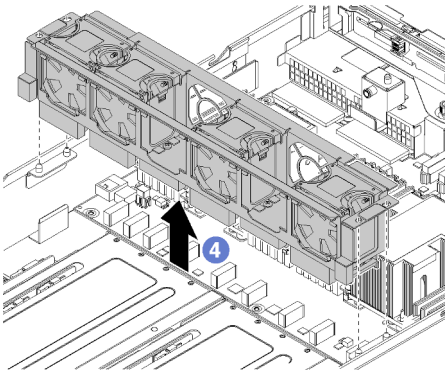

Figure 38. Removing the system fan cage

Step 5. If you are replacing the system fan cage, disconnect the system fan cage cable assembly from the system board. See "System board components" on page 22 for the location of the cable connectors on the system board.

Demo video

Watch the procedure on YouTube

Install the system fan cage

Use this information to install the system fan cage.

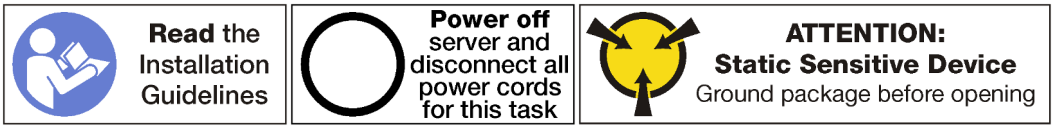

To install the system fan cage, complete the following steps:

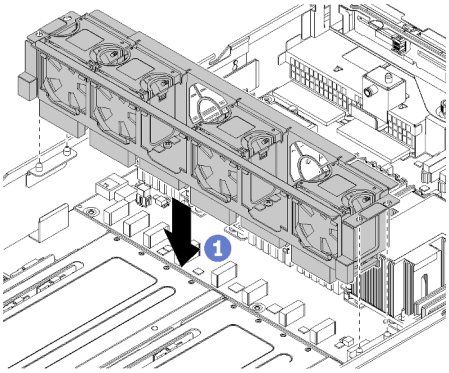

Figure 39. Installing the system fan cage

Step 1. Align both sides of the system fan cage with the corresponding mounting posts in the chassis. Then, press the system fan cage straight down into the chassis.

Step 2. Tighten the captive screws that are located in fan bays 2 and 4.

Step 3. Install the system fans in fan bay 2 and fan bay 4. See "Install a system fan" on page 80.

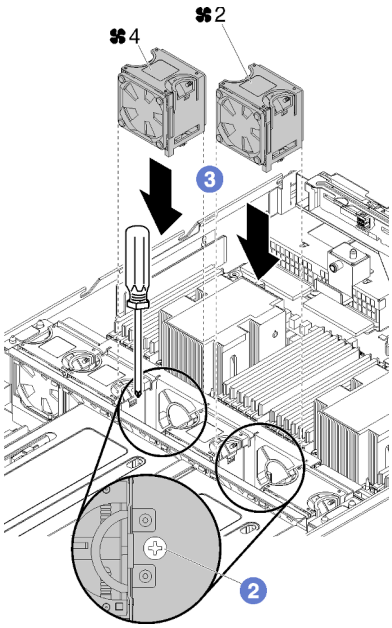

Step 4. Route the system fan cage cable through the right cable routing trough. See "Fan cage cable routing" on page 57 for information about cable routing.

Note: The power cable should be the topmost cable routed through the cable routing trough.

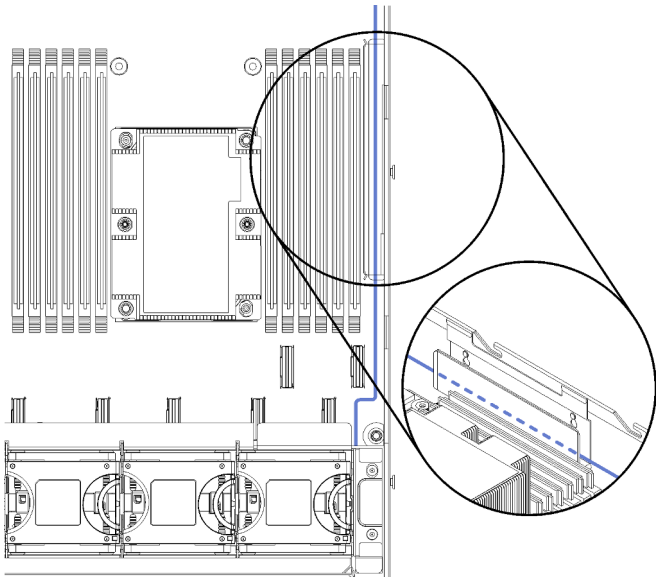

Figure 40. Fan power cable routing through right cable routing trough

Step 5. If you are replacing the system fan cage, plug in the six connectors on the system fan cage cable to the six connectors on the system board. Make sure that you match the number on the cable with the connector on the system board.

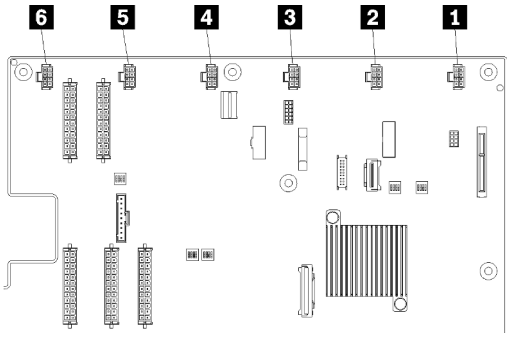

Figure 41. Location of the system fan cage connectors

After installing the system fan cage:

1. If you replaced the system fan cage (including the connection of the fan cage cables to the connectors on the system board), install the drive cage. See "Install the drive cage" on page 138.
2. Install the air baffle. See "Install the air baffle" on page 72.
3. Install the top cover. See "Install the top cover" on page 69.
4. Push up on the latches on the slide rails and push the server back into the rack.
5. Tighten the two captive screws located on the front of the server to secure the server in the rack.

   Note: Always secure the system in the rack if your are moving the rack.
6. Connect all cables to the ports on the front of the server, including the management port, if necessary, and all PCIe adapter ports. The management port and PCIe adapter ports are located in the I/O expansion cage.
7. Connect power cords to both power supplies, which are located at the rear of the server.

Demo video

Watch the procedure on YouTube

I/O expansion cage replacement

Use this information to remove and install the I/O expansion cage.

Remove the I/O expansion cage

Use this information to remove the I/O riser cage.

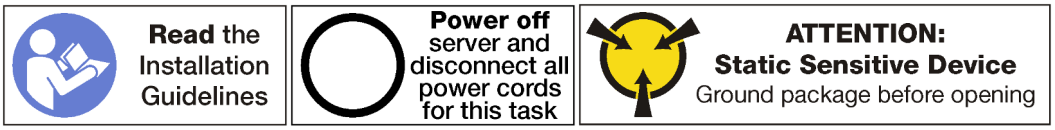

Before removing the I/O expansion cage:

1. Power off the server. See “Power off the server” on page 13.
2. Disconnect power cords from both power supplies, which are located in the rear of the server.
3. Record the location of the cables in the front of the PCIe adapters that are installed in the I/O expansion cage at the front of the server, and disconnect the cables.
4. Disconnect the management port cable from the management port in the I/O expansion cage, if necessary.
5. Loosen the two captive screws located on the front of the server. If necessary, use a P2 screwdriver to loosen the screws.
6. Loosen the two captive screws located on the front of the server using a P2 screwdriver.
7. Pull the server forward until the slide rails click into place.
8. Remove the top cover. See “Remove the top cover” on page 67.
9. Remove the air baffle. See “Remove the air baffle” on page 71.
10. Remove the system fan cage. See “Remove the system fan cage” on page 81.

    Note: You do not need to completely remove the system fan cage. Instead, after removing the system fan cage, carefully place it on the drive cage to get the system fan cage out of the way.

To remove the I/O expansion cage, complete the following steps:

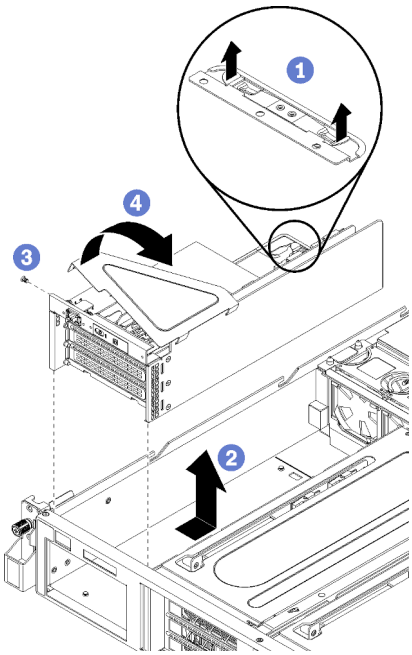

Figure 42. Removing the I/O expansion cage

Step 1. Lift the blue retention tabs at the back of the I/O expansion cage.

Step 2. Slide the I/O expansion cage back and then lift it away from the server chassis.

Step 3. Rotate the I/O expansion cage so that the screw for the expansion cage cover is facing up; then, carefully remove the P1 screw for the I/O expansion cage cover.

Step 4. Rotate the I/O expansion cage so that the expansion cage cover is facing up and lift the expansion cage cover to expose the operator panel cable, management port cable, and the PCIe adapters.

Step 5. Disconnect all cables (not shown):

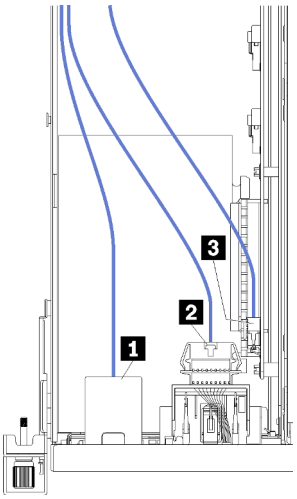

Figure 43. I/O cage cables

a. Disconnect the management port cable 1 from the I/O expansion cage.
b. Disconnect the operator information panel cable 2 from the I/O expansion cage.
c. Disconnect the yellow and black power cables 3 from the I/O expansion cage.
d. Disconnect the PCIe adapter cables (all five of them) on the system board.

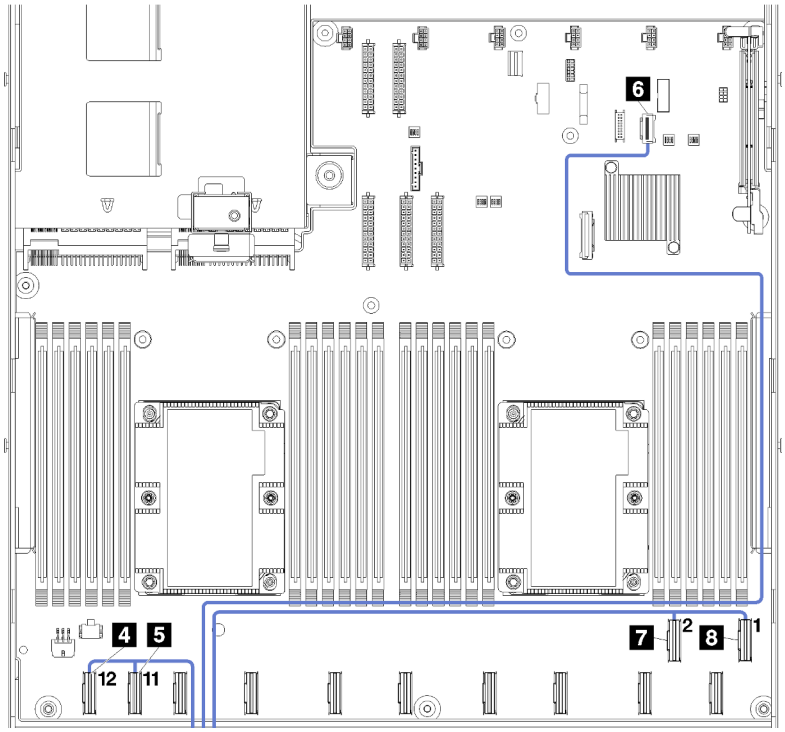

Figure 44. I/O cage PCIe cable connectors

Note: If you need to replace any of these cables, you will also need to remove the drive cage to access the cable connectors on the system board. See "Remove the drive cage" on page 137.

Demo video

Watch the procedure on YouTube

Install the I/O expansion cage

Use this information to install the I/O expansion cage.

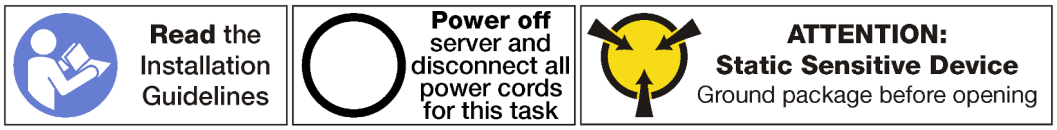

Before installing the I/O expansion cage, make sure that you connect all internal cables:

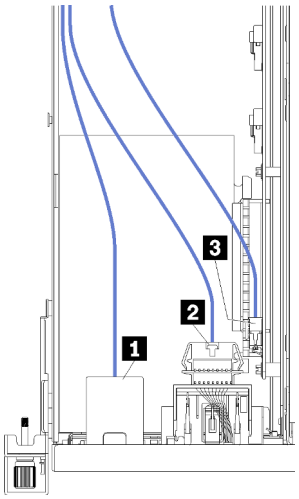

Figure 45. I/O cage cables

- Connect the management port cable 1 to the I/O expansion cage.
- Connect the operator information panel cable 2 to the I/O expansion cage.
- Connect the yellow and black power cables 3 to the I/O expansion cage.
- Connect the PCIe adapter cables (all five of them) on the system board.

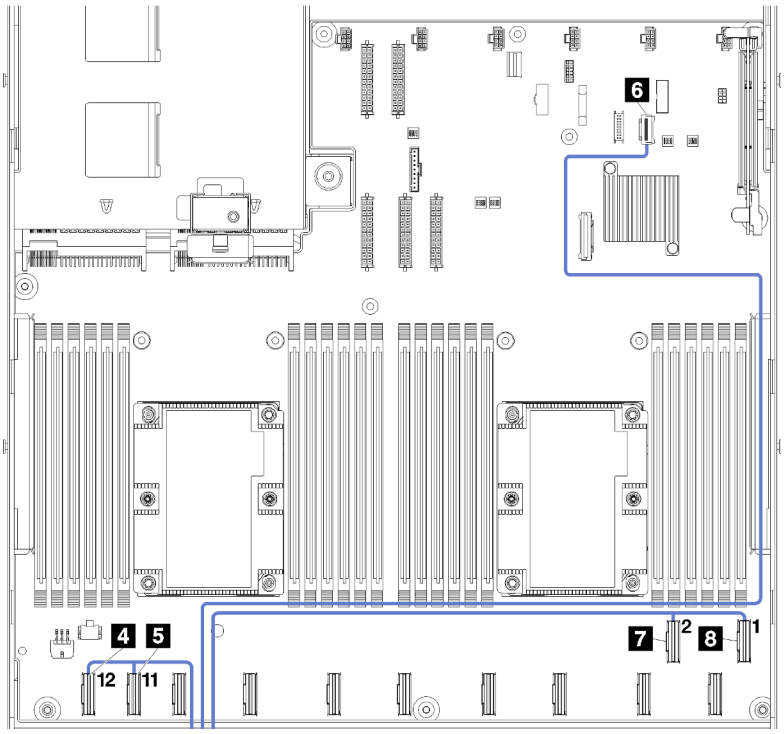

Figure 46. I/O cage PCIe cable connectors

For more information about internal cable routing for the I/O expansion cage, see "I/O expansion cage cable routing" on page 31.

To install the I/O expansion cage, complete the following steps:

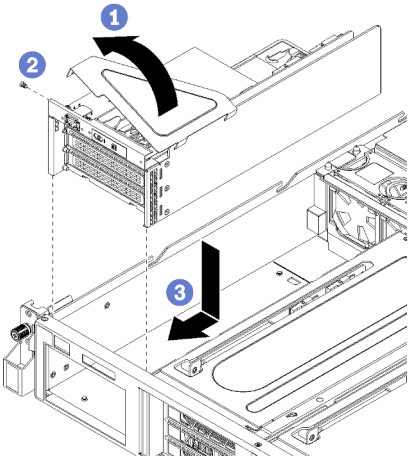

Figure 47. Installing the I/O expansion cage

Step 1. Lower the I/O expansion cage cover over the operator panel and the PCIe adapters.

Step 2. Rotate the I/O expansion cage so that the screw hole for the expansion cage cover is facing up; then, install the screw for the I/O expansion cage cover using a P1 screwdriver.

Step 3. Rotate the I/O expansion cage so that the cover is facing up. Then, carefully place the I/O expansion cage onto the server chassis and slide it toward the front of the server until the I/O

expansion cage is seated and the blue tabs at the back of the I/O expansion cage are locked into place.

After installing the I/O expansion cage:

1. Route all cables correctly. See "I/O expansion cage cable routing" on page 31.
2. Install the system fan cage assembly. See "Install the system fan cage" on page 84.
3. If necessary, install the drive cage. See "Install the drive cage" on page 138.
4. Install the air baffle. See "Install the air baffle" on page 72.
5. Install the top cover. See "Install the top cover" on page 69.
6. Push up on the latches on the slide rails and push the server back into the rack.
7. Tighten the two captive screws located on the front of the server to secure the server in the rack.

   Note: Always secure the system in the rack if your are moving the rack.
8. Connect all cables to the ports on the front of the server, including the management port, if necessary, and all PCIe adapter ports. The management port and PCIe adapter ports are located in the I/O expansion cage.
9. Connect power cords to both power supplies, which are located at the rear of the server.

Demo video

Watch the procedure on YouTube

PCIe adapter replacement

Use this information to remove and install a PCIe adapter in the I/O expansion cage.

The PCIe adapter can be an Ethernet adapter, a host bus adapter, a PCIe solid-state drive, or any other supported PCIe adapters. PCIe adapters vary by type, but the installation and removal procedures are the same.

For a list of the supported PCIe adapters, see:

https://serverproven.lenovo.com

Remove a PCIe adapter from the I/O expansion cage

Use this information to remove a PCIe adapter from the I/O expansion cage.

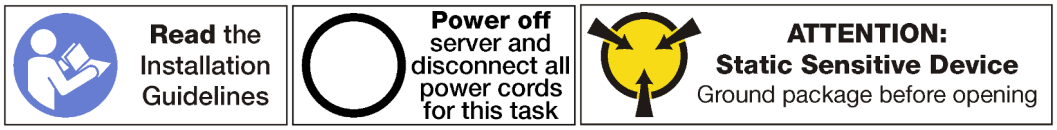

Notes:

- Depending on the specific type, your PCIe adapter might look different from the illustration in this topic.
- Use any documentation that comes with the PCIe adapter and follow those instructions in addition to the instructions in this topic.

Before removing a PCIe adapter from the I/O expansion cage:

1. Power off the server. See “Power off the server” on page 13.
2. Disconnect power cords from both power supplies, which are located in the rear of the server.
3. Record the location of the cables in the front of the PCIe adapters that are installed in the I/O expansion cage at the front of the server, and disconnect the cables.
4. Disconnect the management port cable from the management port in the I/O expansion cage, if necessary.
5. Loosen the two captive screws located on the front of the server. If necessary, use a P2 screwdriver to loosen the screws.
6. Pull the server forward until the slide rails click into place.
7. Remove the top cover. See “Remove the top cover” on page 67.
8. Remove the air baffle. See “Remove the air baffle” on page 71.
9. Remove the system fan cage. See “Remove the system fan cage” on page 81.
10. Remove the I/O expansion cage. See “Remove the I/O expansion cage” on page 86.

To remove a PCIe adapter from the I/O expansion cage, complete the following steps:

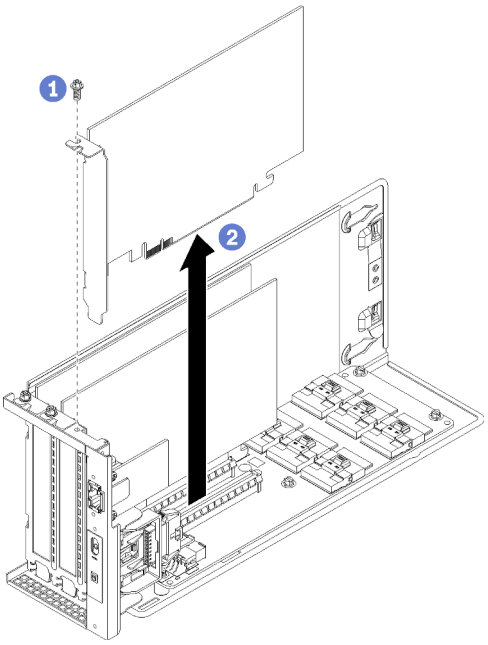

Figure 48. Removing a PCIe adapter from the I/O expansion cage

Step 1. Rotate the I/O expansion cage so that the screw on the PCIe adapter is facing up, and remove the screw.

Step 2. Grasp the PCIe adapter by its edges and carefully pull it out of the PCIe slot.

Note: The PCIe adapter might fit tightly into the PCIe slot. If necessary, alternatively move each side of the PCIe adapter a small and equal amount until it is removed from the slot.

If you are instructed to return the old PCIe adapter, follow all packaging instructions and use any packaging materials that are provided.

After removing the PCIe adapter:

1. Install another PCIe adapter, if needed.
2. Connect the cables back to all PCIe adapters.
3. Install the I/O expansion cage. See “Install the I/O expansion cage” on page 89.
4. Install the fan cage. See “Install the system fan cage” on page 84.
5. Install the air baffle. See “Install the air baffle” on page 72.
6. Install the top cover. See “Install the top cover” on page 69.
7. Push up on the latches on the slide rails and push the server back into the rack.
8. Tighten the two captive screws located on the front of the server to secure the server in the rack.

   Note: Always secure the system in the rack if your are moving the rack.
9. Connect all cables to the ports on the front of the server, including the management port, if necessary, and all PCIe adapter ports. The management port and PCIe adapter ports are located in the I/O expansion cage.
10. Connect power cords to both power supplies, which are located at the rear of the server.

Demo video

Watch the procedure on YouTube

Install a PCIe adapter in the I/O expansion cage

Use the following information to install a PCIe adapter in the I/O expansion cage.

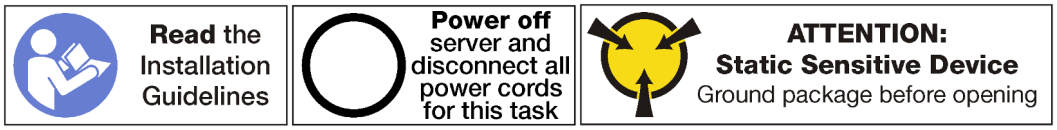

Notes:

- Depending on the specific type, your PCIe adapter might look different from the illustration in this topic.
- Use any documentation that comes with the PCIe adapter and follow those instructions in addition to the instructions in this topic.

Before installing a PCIe adapter in the I/O expansion cage:

1. Disconnect power cords from both power supplies.
2. Disconnect all cables from the front of the PCIe adapters that are installed in the I/O expansion cage.
3. Loosen the two captive screws located on the front of the server.
4. Pull the server forward until the slide rails click into place.
5. Remove the top cover. See "Remove the top cover" on page 67.
6. Remove the fan cage. See "Remove the system fan cage" on page 81.
7. Remove the air baffle. See "Remove the air baffle" on page 71.
8. Remove the I/O expansion cage (see "Remove the I/O expansion cage" on page 86).
   a. Lift the blue retention tabs at the back of the I/O expansion cage.
   b. Slide the I/O expansion cage back and then lift it away from the server chassis.
   c. Rotate the I/O expansion cage so that the screw for the expansion cage cover is facing up; then, carefully remove the P1 screw for the I/O expansion cage cover.
   d. Push the I/O expansion cage cover out of the way.
9. Remove the adapter filler by removing the adapter retention screw for the filler and lifting it away from the I/O expansion cage.
10. Touch the static-protective package that contains the new PCIe adapter to any unpainted surface on the outside of the server. Then, take the new PCIe adapter out of the package and place it on a static-protective surface.

To install a PCIe adapter in the I/O expansion cage, complete the following steps:

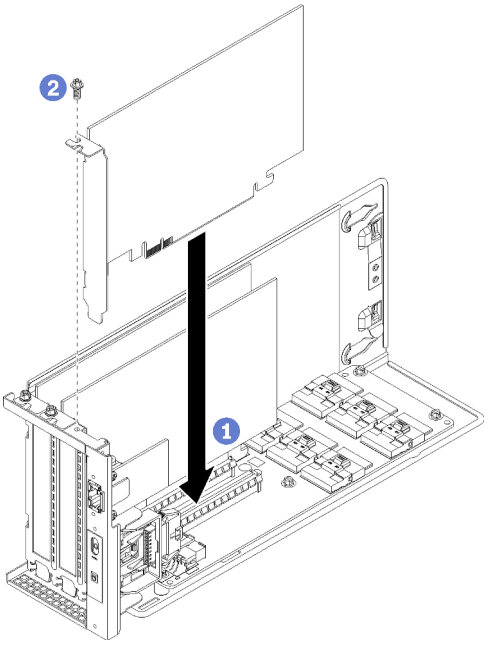

Figure 49. Installing a PCIe adapter

Step 1. Align the PCIe adapter with the PCIe slot on the I/O expansion cage. Then, carefully press the PCIe adapter straight into the slot until it is securely seated and its bracket also is secured.

Note: Carefully handle the PCIe adapter by its edges.

Step 2. Install the adapter retention screw to secure the adapter in place.

Step 3. Reinstall the I/O expansion cage cover.

After installing the PCIe adapter in the I/O expansion cage:

1. Connect the cables back to the PCIe adapter.
2. Install the I/O expansion cage. See “Install the I/O expansion cage” on page 89.
3. Install the fan cage. See “Install the system fan cage” on page 84.
4. Install the air baffle. See “Install the air baffle” on page 72.
5. Install the top cover. See “Install the top cover” on page 69.
6. Push up on the latches on the slide rails and push the server back into the rack.
7. Tighten the two captive screws located on the front of the server to secure the server in the rack.

   Note: Always secure the system in the rack if your are moving the rack.
8. Connect all cables to the ports on the front of the server, including the management port, if necessary, and all PCIe adapter ports. The management port and PCIe adapter ports are located in the I/O expansion cage.
9. Connect power cords to both power supplies, which are located at the rear of the server.

Demo video

Watch the procedure on YouTube

RAID adapter replacement

Use this information to remove and install a RAID adapter from the I/O expansion cage.

If you install SAS hard drives in the hard drive cage, you must install a supported RAID adapter or host bust adapter as the controller for those SAS drives. The onboard RAID controller supports SATA drives only.

Remove a RAID adapter from the I/O expansion cage

Use this information to remove a RAID adapter from the I/O expansion cage.

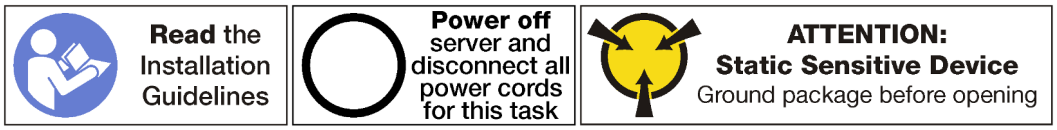

Note: The process for removing most RAID adapters in the I/O expansion cage is the same, with one exception: the RAID 930-8i adapter. The RAID 930-8i requires the RAID 930-8i supercapacitor (called a supercap), which is used as a backup for the NAND flash memory on the adapter.

Before removing a PCIe adapter from the I/O expansion cage:

1. Power off the server. See “Power off the server” on page 13.
2. Disconnect power cords from both power supplies, which are located in the rear of the server.
3. Record the location of the cables in the front of the PCIe adapters that are installed in the I/O expansion cage at the front of the server, and disconnect the cables.
4. Disconnect the management port cable from the management port in the I/O expansion cage, if necessary.
5. Loosen the two captive screws located on the front of the server. If necessary, use a P2 screwdriver to loosen the screws.
6. Pull the server forward until the slide rails click into place.
7. Remove the top cover. See “Remove the top cover” on page 67.
8. Remove the air baffle. See “Remove the air baffle” on page 71.
9. Remove the system fan cage. See “Remove the system fan cage” on page 81.
10. Remove the I/O expansion cage. See “Remove the I/O expansion cage” on page 86.

To remove a RAID adapter from the I/O expansion cage, complete the following steps:

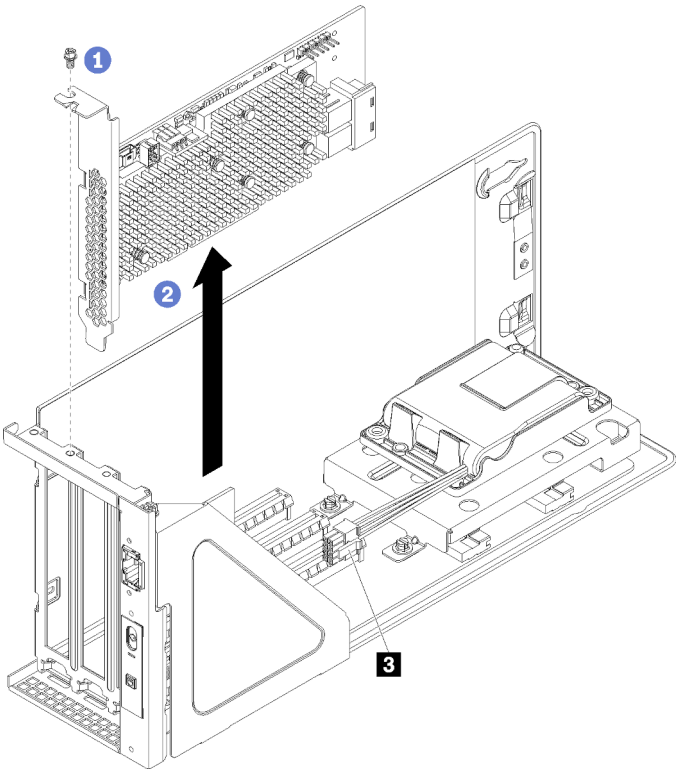

Figure 50. Removing a RAID adapter from the I/O expansion cage (ThinkSystem 930-8i)

Step 1. Rotate the I/O expansion cage so that the screw on the RAID adapter is facing up, and remove the screw.

Step 2. Grasp the RAID adapter by its edges and carefully pull it out of the PCIe slot.

Note: The RAID adapter might fit tightly into the PCIe slot. If necessary, alternatively move each side of the RAID adapter a small and equal amount until it is removed from the slot.

Step 3. Disconnect the SAS cables (2) from the RAID adapter.

Step 4. If you are removing a RAID 930-8i adapter, disconnect the RAID adapter power cable from the power cable connector on the RAID adapter(1) .

Note: With the RAID 930-8i adapter, the RAID adapter power cable is connected from the power cable connector (1) to the supercap power connector (3).

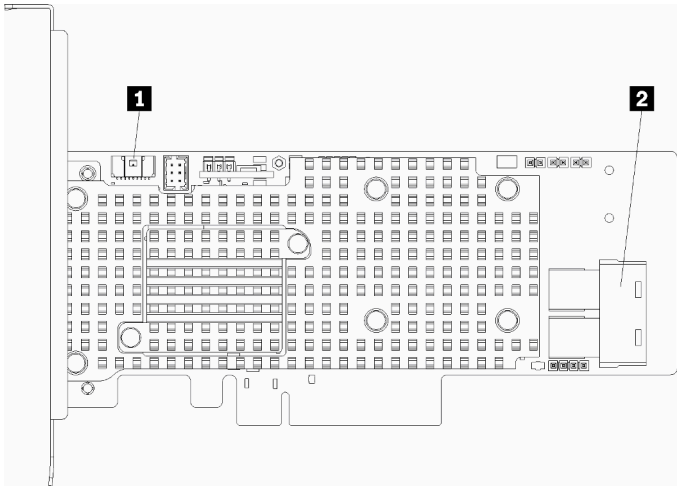

Figure 51. RAID 930-8i adapter connectors

After removing the RAID adapter, perform one of the following procedures:

- Install a supported RAID adapter or HBA. See "Install a RAID adapter in the I/O expansion cage" on page 97.
- If you are removing a RAID 930-8i adapter and not installing a new RAID 930-8i adapter, remove the RAID 930-8i supercap. See "Remove the RAID 930-8i supercap" on page 100.

To complete the procedure:

1. Connect the cables back to all PCIe adapters.
2. Install the I/O expansion cage. See "Install the I/O expansion cage" on page 89.
3. Install the fan cage. See "Install the system fan cage" on page 84.
4. Install the air baffle. See "Install the air baffle" on page 72.
5. Install the top cover. See "Install the top cover" on page 69.
6. Push up on the latches on the slide rails and push the server back into the rack.
7. Tighten the two captive screws located on the front of the server to secure the server in the rack.

   Note: Always secure the system in the rack if your are moving the rack.
8. Connect all cables to the ports on the front of the server, including the management port, if necessary, and all PCIe adapter ports. The management port and PCIe adapter ports are located in the I/O expansion cage.
9. Connect power cords to both power supplies, which are located at the rear of the server.

Install a RAID adapter in the I/O expansion cage

Use the following information to install a RAID adapter on the I/O expansion cage.

Read the Installation Guidelines	**Power off** server and disconnect all power cords for this task	**ATTENTION: Static Sensitive Device** Ground package before opening

Note: The process for installing most RAID adapters in the I/O expansion cage is the same, with one exception: the RAID 930-8i adapter. The RAID 930-8i requires the RAID 930-8i supercapacitor (called a supercap), which is used as a backup for the NAND flash memory on the adapter. Before installing a RAID 930-8i adapter, make sure that you have installed a RAID 930-8i supercap (including the supercap retention bracket). See "Install the RAID 930-8i supercap" on page 106.

Before installing a PCIe adapter on the I/O expansion cage:

1. Disconnect power cords from both power supplies.
2. Disconnect all cables from the front of the PCIe adapters that are installed in the I/O expansion cage.
3. Loosen the two captive screws located on the front of the server.
4. Pull the server forward until the slide rails click into place.
5. Remove the top cover. See "Remove the top cover" on page 67.
6. Remove the air baffle. See "Remove the air baffle" on page 71.
7. Remove the fan cage. See "Remove the system fan cage" on page 81.
8. Remove the I/O expansion cage (see "Remove the I/O expansion cage" on page 86).
   a. Lift the blue retention tabs at the back of the I/O expansion cage.
   b. Slide the I/O expansion cage back and then lift it away from the server chassis.
   c. Rotate the I/O expansion cage so that the screw for the expansion cage cover is facing up; then, carefully remove the P1 screw for the I/O expansion cage cover.
   d. Push the I/O expansion cage cover out of the way.
9. Touch the static-protective package that contains the new PCIe adapter to any unpainted surface on the outside of the server. Then, take the new PCIe adapter out of the package and place it on a static-protective surface.
10. Connect the RAID adapter power cable from the RAID adapter supercap to the RAID adapter.

To install a RAID adapter on the I/O expansion cage, complete the following steps:

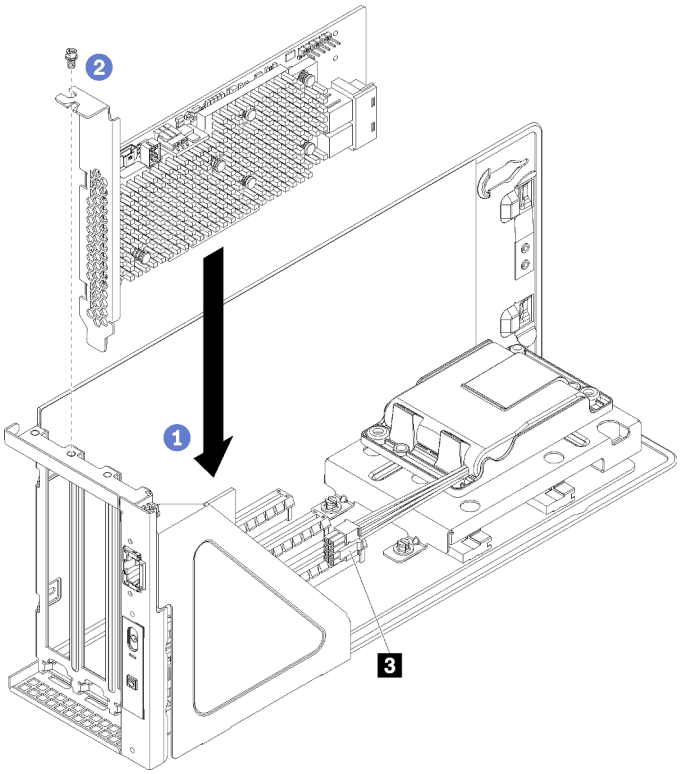

Figure 52. Installing a PCIe adapter (ThinkSystem 930-8i)

Step 1. Remove the adapter filler by removing the adapter retention screw for the filler and lifting it away from the I/O expansion cage.

Step 2. Align the PCIe adapter with the PCIe slot on the I/O expansion cage. Then, carefully press the PCIe adapter straight into the slot until it is securely seated and its bracket also is secured.

Note: Carefully handle the PCIe adapter by its edges.

Step 3. If you are installing a RAID 930-8i adapter, connect the RAID adapter power cable from the RAID supercap power connector (3) to the RAID adapter connector (1).

Figure 53. RAID 930-8i adapter connectors

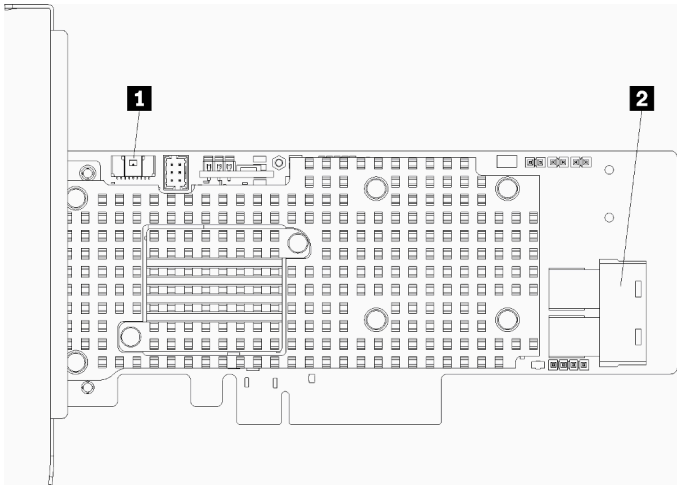

Step 4. Connect the SAS cables from the SAS 0 and SAS 1 connectors on the drive cage backplane to the RAID adapter (2).

Step 5. Install the adapter retention screw to secure the adapter in place.

Step 6. Reinstall the I/O expansion cage cover.

After installing the PCIe adapter on the I/O expansion cage:

1. Connect the cables back to the PCIe adapter.
2. Install the I/O expansion cage. See "Install the I/O expansion cage" on page 89.
3. Install the fan cage. See "Install the system fan cage" on page 84.
4. Install the air baffle. See "Install the air baffle" on page 72.
5. Install the top cover. See "Install the top cover" on page 69.
6. Push up on the latches on the slide rails and push the server back into the rack.
7. Tighten the two captive screws located on the front of the server to secure the server in the rack.

   Note: Always secure the system in the rack if your are moving the rack.
8. Connect all cables to the ports on the front of the server, including the management port, if necessary, and all PCIe adapter ports. The management port and PCIe adapter ports are located in the I/O expansion cage.
9. Connect power cords to both power supplies, which are located at the rear of the server.

RAID 930-8i supercap replacement

Use this information to remove and install the supercapacitor (called a supercap) in the I/O expansion cage.

If you install a RAID 930-8i adapter, you must install a RAID 930-8i supercap.

Remove the RAID 930-8i supercap

Use this information to remove the RAID 930-8i supercap from the I/O expansion cage.

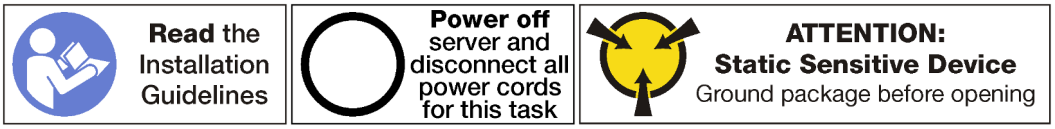

Before removing the a RAID 930-8i supercap from the I/O expansion cage:

1. Power off the server. See "Power off the server" on page 13.
2. Disconnect power cords from both power supplies, which are located in the rear of the server.
3. Record the location of the cables in the front of the PCIe adapters that are installed in the I/O expansion cage at the front of the server, and disconnect the cables.
4. Disconnect the management port cable from the management port in the I/O expansion cage, if necessary.
5. Loosen the two captive screws located on the front of the server. If necessary, use a P2 screwdriver to loosen the screws.
6. Pull the server forward until the slide rails click into place.
7. Remove the top cover. See "Remove the top cover" on page 67.
8. Remove the air baffle. See "Remove the air baffle" on page 71.
9. Remove the system fan cage. See "Remove the system fan cage" on page 81.
10. Remove the I/O expansion cage. See "Remove the I/O expansion cage" on page 86.

To remove the RAID 930-8i supercap, complete the following steps:

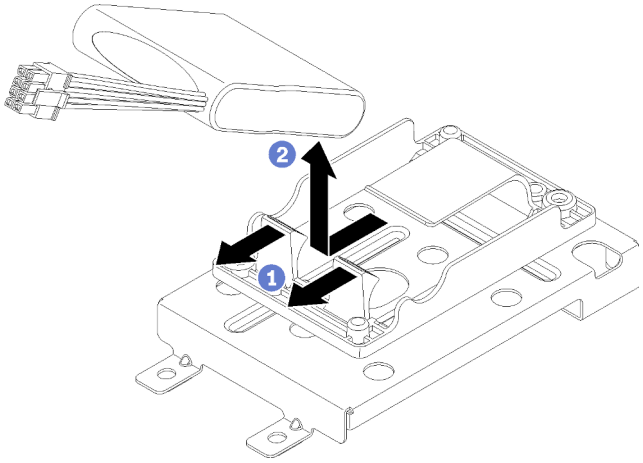

Step 1. Pull back on the front retention clips.

Step 2. Grasp the supercap from the front where the cables are attached and gently lift the supercap away from the supercap retention bracket. Be careful to not actually grasp the cables.

After removing the supercap:

1. Install another supercap, if needed.

   Note: If a RAID 930-8i adapter is installed, you must install another supercap.
2. Install the I/O expansion cage. See "Install the I/O expansion cage" on page 89.
3. Install the fan cage. See "Install the system fan cage" on page 84.
4. Install the air baffle. See "Install the air baffle" on page 72.
5. Install the top cover. See "Install the top cover" on page 69.
6. Push up on the latches on the slide rails and push the server back into the rack.
7. Tighten the two captive screws located on the front of the server to secure the server in the rack.

   Note: Always secure the system in the rack if your are moving the rack.

8. Connect all cables to the ports on the front of the server, including the management port, if necessary, and all PCIe adapter ports. The management port and PCIe adapter ports are located in the I/O expansion cage.
9. Connect power cords to both power supplies, which are located at the rear of the server.

Remove the RAID 930-8i supercap retention bracket

Use this information to remove the RAID 930-8i supercap retention bracket from the I/O expansion cage.

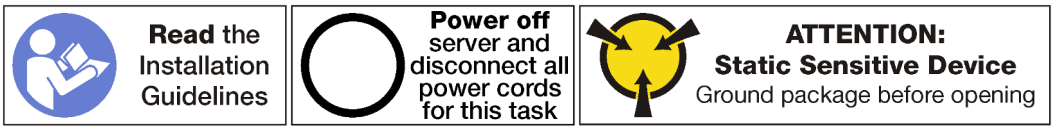

Before removing the a RAID 930-8i supercap from the I/O expansion cage:

1. Power off the server. See "Power off the server" on page 13.
2. Disconnect power cords from both power supplies, which are located in the rear of the server.
3. Record the location of the cables in the front of the PCIe adapters that are installed in the I/O expansion cage at the front of the server, and disconnect the cables.
4. Disconnect the management port cable from the management port in the I/O expansion cage, if necessary.
5. Loosen the two captive screws located on the front of the server. If necessary, use a P2 screwdriver to loosen the screws.
6. Pull the server forward until the slide rails click into place.
7. Remove the top cover. See "Remove the top cover" on page 67.
8. Remove the air baffle. See "Remove the air baffle" on page 71.
9. Remove the system fan cage. See "Remove the system fan cage" on page 81.
10. Remove the I/O expansion cage. See "Remove the I/O expansion cage" on page 86.

To remove the RAID 930-8i supercap, complete the following steps:

Step 1. Remove all PCIe adapters from the I/O expansion cage, including the RAID 930-8i adapter.

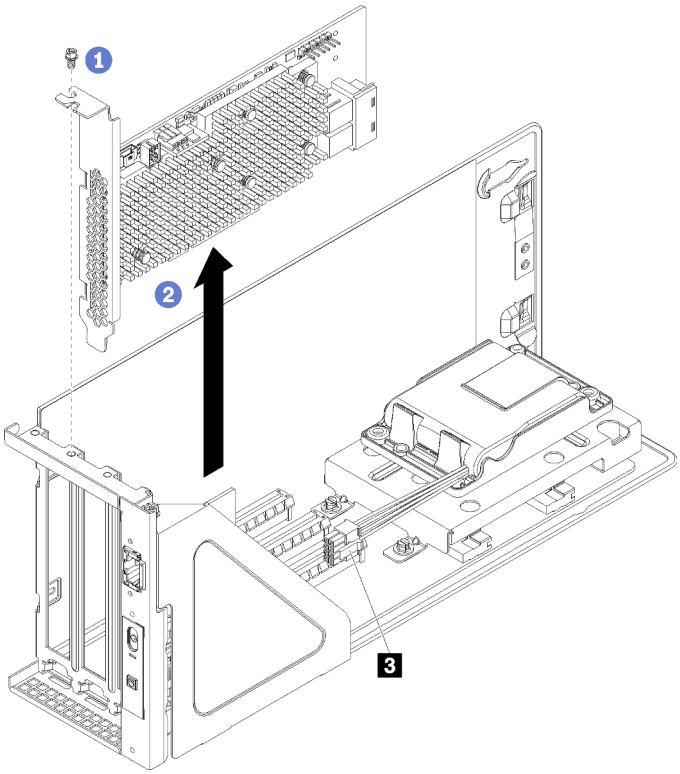

Figure 54. Removing the RAID 930-8i adapter from the I/O expansion cage

a. Rotate the I/O expansion cage so that the screw on the PCIe adapter is facing up, and remove the screw.

b. Disconnect the RAID adapter power cable from the supercap connector (3).

c. Grasp the PCIe adapter by its edges and carefully pull it out of the PCIe slot.

Note: The PCIe adapter might fit tightly into the PCIe slot. If necessary, alternatively move each side of the PCIe adapter a small and equal amount until it is removed from the slot.

Step 2. Remove the supercap retention bracket.

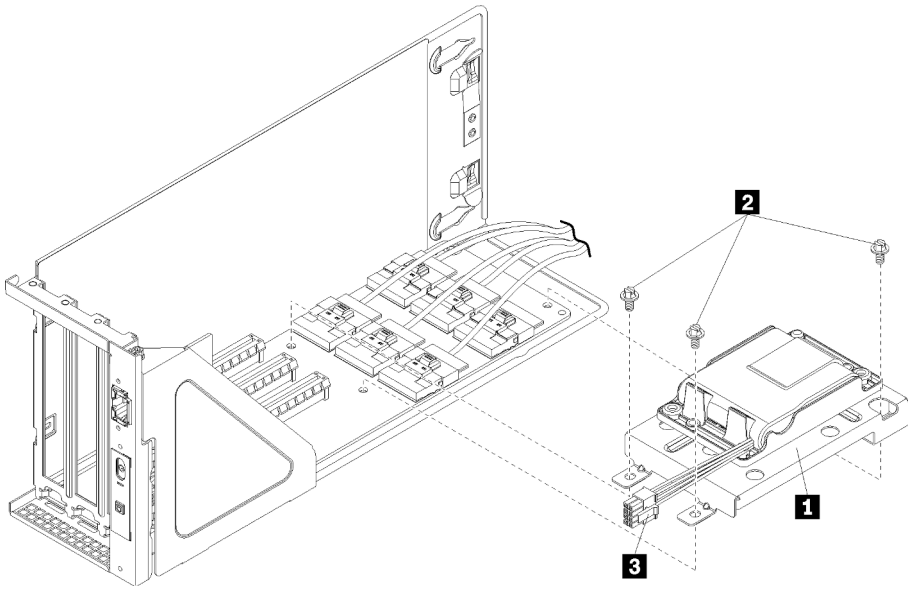

Figure 55. Supercap bracket

a. Remove three screws (2) that connect the retention bracket to the I/O expansion cage card.
b. Remove the supercap retention bracket from the I/O expansion cage card (1).

After removing the supercap retention bracket:

1. Install all PCIe adapters in the I/O cage.
2. Connect the cables back to all PCIe adapters.
3. Install the I/O expansion cage. See "Install the I/O expansion cage" on page 89.
4. Install the fan cage. See "Install the system fan cage" on page 84.
5. Install the air baffle. See "Install the air baffle" on page 72.
6. Install the top cover. See "Install the top cover" on page 69.
7. Push up on the latches on the slide rails and push the server back into the rack.
8. Tighten the two captive screws located on the front of the server to secure the server in the rack.

   Note: Always secure the system in the rack if your are moving the rack.
9. Connect all cables to the ports on the front of the server, including the management port, if necessary, and all PCIe adapter ports. The management port and PCIe adapter ports are located in the I/O expansion cage.
10. Connect power cords to both power supplies, which are located at the rear of the server.

Install a RAID 930-8i supercap retention bracket

Use this information to install a RAID 930-8i supercap retention bracket on the I/O expansion cage card.

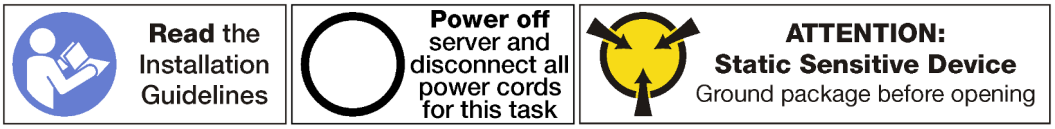

Before installing the RAID 930-8i supercap retention bracket:

1. Disconnect power cords from both power supplies.
2. Disconnect all cables from the front of the PCIe adapters that are installed in the I/O expansion cage.
3. Loosen the two captive screws located on the front of the server.
4. Pull the server forward until the slide rails click into place.
5. Remove the top cover. See "Remove the top cover" on page 67.
6. Remove the air baffle. See "Remove the air baffle" on page 71.
7. Remove the system fan cage. See "Remove the system fan cage" on page 81.
8. Remove the I/O expansion cage (see "Remove the I/O expansion cage" on page 86).
   a. Lift the blue retention tabs at the back of the I/O expansion cage.
   b. Slide the I/O expansion cage back and then lift it away from the server chassis.
   c. Rotate the I/O expansion cage so that the screw for the expansion cage cover is facing up; then, carefully remove the P1 screw for the I/O expansion cage cover.
   d. Push the I/O expansion cage cover out of the way.

To install a supercap retention bracket on the I/O expansion cage card, complete the following steps:

Step 1. Disconnect the internal cables from all PCIe adapters and remove the adapters.

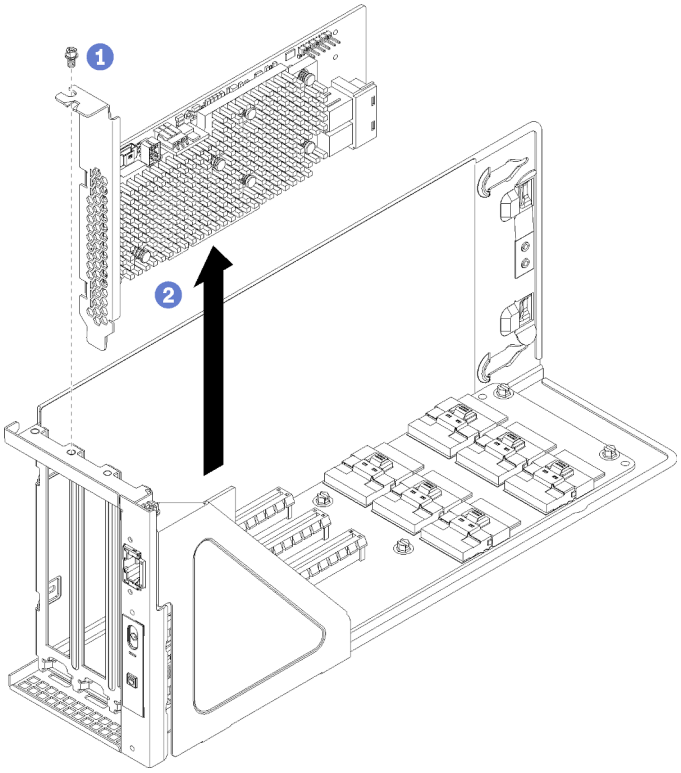

Figure 56. Remove a RAID 930-8i adapter

Step 2. Install the supercap retention bracket.

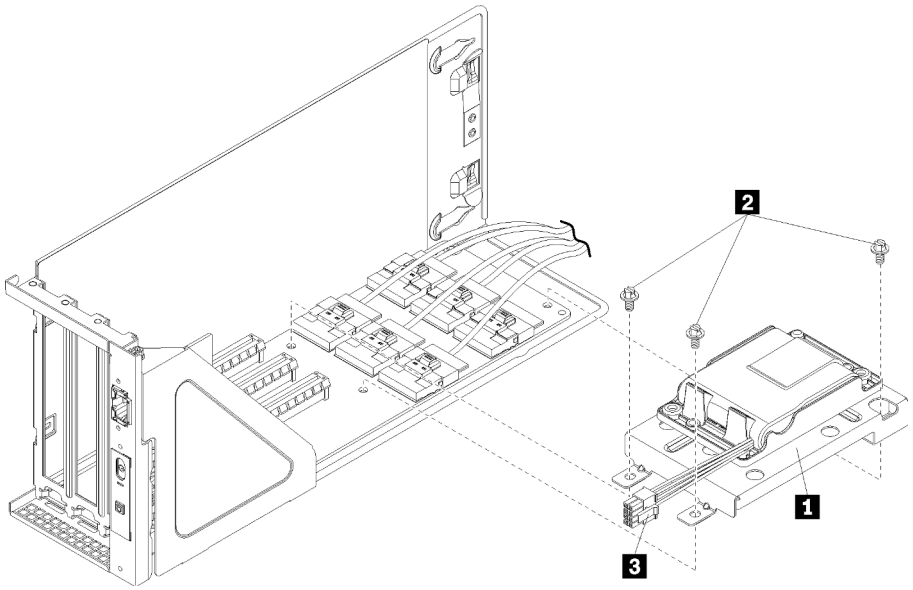

Figure 57. Supercap bracket

a. Remove three screws from the I/O expansion cage card.

b. Install the supercap retention bracket to the I/O expansion cage card (1). Attach the bracket using the three screws that were provided with the bracket (2).

After installing the RAID 930-8i supercap retention bracket:

1. Optionally, install a supercap. See "Install the RAID 930-8i supercap" on page 106.
2. Reinstall all PCIe adapters.

   Note: To make installing the RAID 930-8i RAID adapter easier, make sure that you connect the RAID adapter power cable from the supercap connector to the RAID adpater **before** you install the adapter in the I/O expansion bay.
3. Connect the cables back to all PCIe adapters.
4. Install the I/O expansion cage. See "Install the I/O expansion cage" on page 89.
5. Install the fan cage. See "Install the system fan cage" on page 84.
6. Install the air baffle. See "Install the air baffle" on page 72.
7. Install the top cover. See "Install the top cover" on page 69.
8. Push up on the latches on the slide rails and push the server back into the rack.
9. Tighten the two captive screws located on the front of the server to secure the server in the rack.

   Note: Always secure the system in the rack if your are moving the rack.
10. Connect all cables to the ports on the front of the server, including the management port, if necessary, and all PCIe adapter ports. The management port and PCIe adapter ports are located in the I/O expansion cage.
11. Connect power cords to both power supplies, which are located at the rear of the server.

Install the RAID 930-8i supercap

Use this information to install a RAID 930-8i supercap on the I/O expansion cage card.

Read the Installation Guidelines	**Power off** server and disconnect all power cords for this task	**ATTENTION: Static Sensitive Device** Ground package before opening

Before installing the RAID 930-8i supercap:

1. Disconnect power cords from both power supplies.
2. Disconnect all cables from the front of the PCIe adapters that are installed in the I/O expansion cage.
3. Loosen the two captive screws located on the front of the server.
4. Pull the server forward until the slide rails click into place.
5. Remove the top cover. See "Remove the top cover" on page 67.
6. Remove the air baffle. See "Remove the air baffle" on page 71.
7. Remove the system fan cage. See "Remove the system fan cage" on page 81.
8. Remove the I/O expansion cage (see "Remove the I/O expansion cage" on page 86).
   a. Lift the blue retention tabs at the back of the I/O expansion cage.
   b. Slide the I/O expansion cage back and then lift it away from the server chassis.
   c. Rotate the I/O expansion cage so that the screw for the expansion cage cover is facing up; then, carefully remove the P1 screw for the I/O expansion cage cover.
   d. Push the I/O expansion cage cover out of the way.

To install a supercap on the I/O expansion cage card, complete the following steps:

Step 1. Install the supercap into the supercap retention bracket. Slide the rear of the supercap into the retention bracket until the front of the supercap can be lowered into the retention bracket. Then, press down on the supercap to secure it in the bracket.

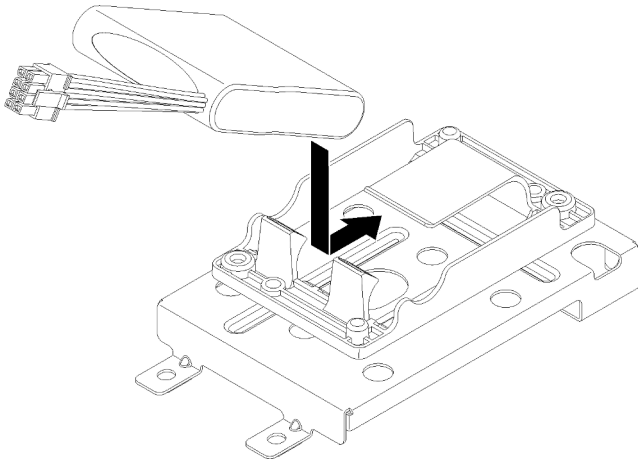

Figure 58. Installing a supercap

Step 2. Attach the RAID adapter power cable to the supercap connector.

After installing the RAID 930-8i supercap:

1. Install the I/O expansion cage. See “Install the I/O expansion cage” on page 89.
2. Install the fan cage. See “Install the system fan cage” on page 84.
3. Install the air baffle. See “Install the air baffle” on page 72.
4. Install the top cover. See “Install the top cover” on page 69.
5. Push up on the latches on the slide rails and push the server back into the rack.
6. Tighten the two captive screws located on the front of the server to secure the server in the rack.

   Note: Always secure the system in the rack if your are moving the rack.
7. Connect all cables to the ports on the front of the server, including the management port, if necessary, and all PCIe adapter ports. The management port and PCIe adapter ports are located in the I/O expansion cage.
8. Connect power cords to both power supplies, which are located at the rear of the server.

Front operator panel replacement

Use this information to remove and install the front operator panel.

Remove the operator panel

Use this information to remove the operator panel.

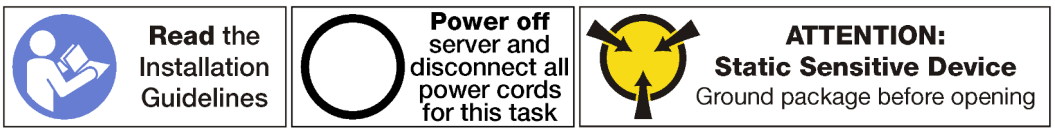

Before removing the operator panel:

1. Power off the server. See “Power off the server” on page 13.
2. Disconnect power cords from both power supplies, which are located in the rear of the server.
3. Record the location of the cables in the front of the PCIe adapters that are installed in the I/O expansion cage at the front of the server, and disconnect the cables.
4. Disconnect the management port cable from the management port in the I/O expansion cage, if necessary.
5. Loosen the two captive screws located on the front of the server. If necessary, use a P2 screwdriver to loosen the screws.
6. Pull the server forward until the slide rails click into place.
7. Remove the top cover. See “Remove the top cover” on page 67.
8. Remove the air baffle. See “Remove the air baffle” on page 71.
9. Remove the system fan cage. See “Remove the system fan cage” on page 81.

   Note: You do not need to completely remove the fan cable assembly from the system fan cage. Instead, after removing the system fan cage, temporarily place it on the drive cage to get the system fan cage out of the way.
10. Remove the I/O expansion cage. See “Remove the I/O expansion cage” on page 86.

To remove the operator panel, complete the following steps:

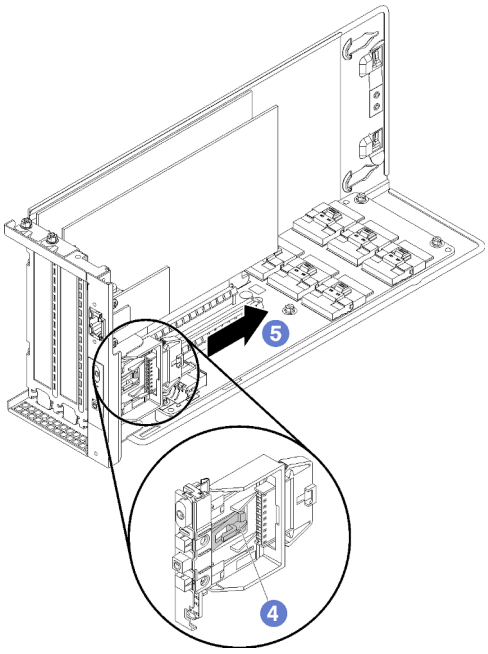

Figure 59. Removing the operator panel

Step 1. Rotate the I/O expansion cage so that the screw for the expansion cage cover is facing up; then, carefully remove the P1 screw for the I/O expansion cage cover.

Step 2. Rotate the I/O expansion cage so that the expansion cage cover is facing up and lift the expansion cage cover to expose the operator panel cable, management port cable, and the PCIe adapters.

Step 3. Disconnect the operator panel power cable from the operator panel.

Notes: If you need to replace the operator panel cable, you will also need to remove the drive cage:

- See "Remove the drive cage" on page 137 for information about removing the drive cage.
- See "I/O expansion cage cable routing" on page 31 for information about cable routing.

Step 4. Use your finger to disengage the tab that is on the underside of the operator information panel (in the middle).

Step 5. Slide the operator information panel back away from the front of the I/O expansion cage.

If you are instructed to return the old operator information panel, follow all packaging instructions and use any packaging materials that are provided.

Demo video

Watch the procedure on YouTube

Install the operator panel

Use this information to install the operator panel.

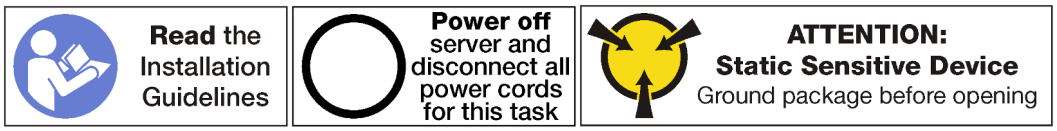

Before installing the operator panel, touch the static-protective package that contains the new operator panel to any unpainted surface on the outside of the server. Then, take the new operator panel out of the package and place it on a static-protective surface.

To install the front I/O assembly, complete the following steps:

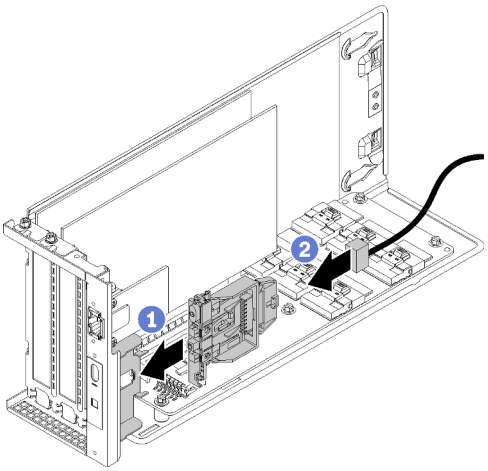

Figure 60. Front I/O assembly installation

Step 1. Align the slots in the operator panel with the raised grooves in the panel tray on top of the I/O expansion cage; then slide the operator panel forward until the operator panel clicks into place.

Step 2. Install the operator panel cable.

After installing the operator panel:

1. Route all cables correctly. See "I/O expansion cage cable routing" on page 31.
2. Install the I/O expansion cage. See "Install the I/O expansion cage" on page 89.
3. Install the system fan cage assembly. See "Install the system fan cage" on page 84.
4. Install the air baffle. See "Install the air baffle" on page 72.
5. Install the top cover. See "Install the top cover" on page 69.
6. Push up on the latches on the slide rails and push the server back into the rack.
7. Tighten the two captive screws located on the front of the server to secure the server in the rack.

   Note: Always secure the system in the rack if your are moving the rack.
8. Connect all cables to the ports on the front of the server, including the management port, if necessary, and all PCIe adapter ports. The management port and PCIe adapter ports are located in the I/O expansion cage.
9. Connect power cords to both power supplies, which are located at the rear of the server.

Demo video

Watch the procedure on YouTube

Management port replacement

Use this information to remove and install the management port.

Important: Access to the XCC on the Product_name, either locally or remotely, is supported **only** through the management port.

Remove the management port

Use this information to remove the management port module.

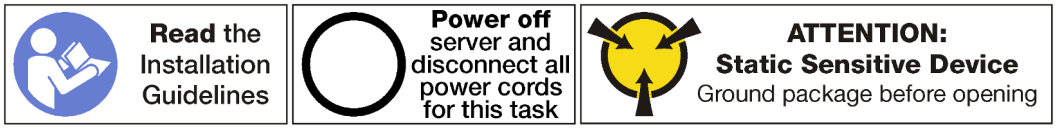

Before removing the management port:

1. Power off the server. See "Power off the server" on page 13.
2. Disconnect power cords from both power supplies, which are located in the rear of the server.
3. Record the location of the cables in the front of the PCIe adapters that are installed in the I/O expansion cage at the front of the server, and disconnect the cables.
4. Disconnect the management port cable from the management port in the I/O expansion cage, if necessary.
5. Loosen the two captive screws located on the front of the server. If necessary, use a P2 screwdriver to loosen the screws.
6. Pull the server forward until the slide rails click into place.
7. Remove the top cover. See "Remove the top cover" on page 67.
8. Remove the air baffle. See "Remove the air baffle" on page 71.
9. Remove the system fan cage assembly. See "Remove the system fan cage" on page 81.

   Note: You do not need to completely remove the fan cable assembly from the system fan cage. Instead, after removing the system fan cage, temporarily place it on the drive cage to get the system fan cage out of the way.
10. Remove the I/O expansion cage. See "Remove the I/O expansion cage" on page 86.
11. Remove the I/O expansion cage cover.

To remove the management port, complete the following steps:

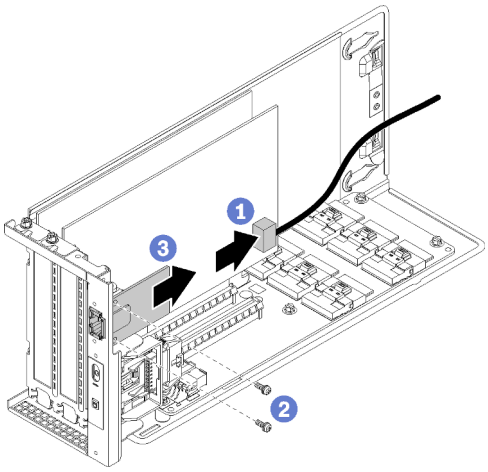

Figure 61. Removing the management port

Step 1. Disconnect the management port cable from the management port.

Notes: If you need to replace the management port cable, you will also need to remove the drive cage:

- See "Remove the drive cage" on page 137 for information about removing the drive cage.
- See "I/O expansion cage cable routing" on page 31 for information about cable routing.

Step 2. Remove the two screws that secure the management port to the server.

Step 3. Slide the management port toward the rear of the server chassis.

Demo video

Watch the procedure on YouTube

Install the management port

Use this information to install the management port.

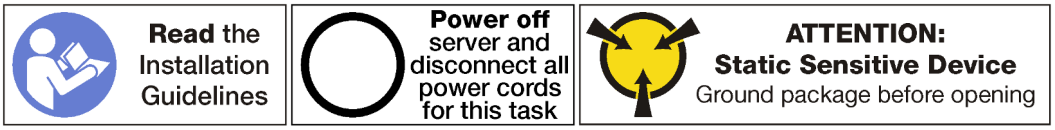

Before installing the management port:

1. If the slot is covered with a slot bracket, open the retention latch and remove the slot bracket from the chassis. Store the bracket in case that you later remove the management port and need the bracket to cover the place.
2. Touch the static-protective package that contains the new management port to any unpainted surface on the outside of the server. Then, take the new management port out of the package and place it on a static-protective surface.

To install the management port, complete the following steps:

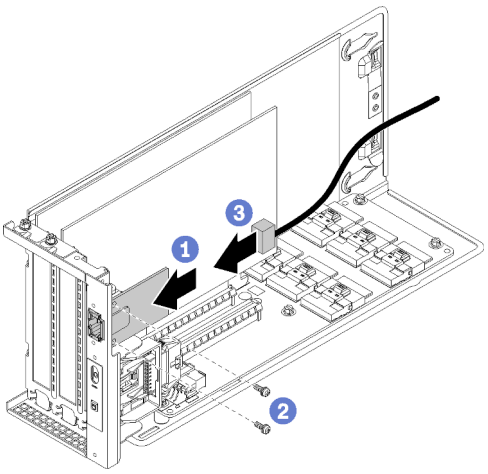

Figure 62. Installing the management port

Step 1. Slide the management port into the management port hole so that the management port is flush with the front of the server chassis.

Step 2. Install the management port screws to secure the management port to the chassis.

Step 3. Connect the management port cable. For more information about cabling, refer to "I/O expansion cage cable routing" on page 31.

After installing the management port:

1. Install the I/O expansion cage cover.
2. Route all cables correctly. See "I/O expansion cage cable routing" on page 31.
3. Install the I/O expansion cage. See "Install the I/O expansion cage" on page 89.
4. Install the system fan cage assembly. See "Install the system fan cage" on page 84.
5. Install the air baffle. See "Install the air baffle" on page 72.
6. Install the top cover. See "Install the top cover" on page 69.
7. Push up on the latches on the slide rails and push the server back into the rack.
8. Tighten the two captive screws located on the front of the server to secure the server in the rack.

   Note: Always secure the system in the rack if your are moving the rack.
9. Connect all cables to the ports on the front of the server, including the management port, if necessary, and all PCIe adapter ports. The management port and PCIe adapter ports are located in the I/O expansion cage.
10. Connect power cords to both power supplies, which are located at the rear of the server.

Demo video

Watch the procedure on YouTube

PCIe expansion cage replacement

Use this information to remove and install the PCIe expansion cage.

Two types of expansion cages are available:

- 3-slot expansion cage.
- 4-slot expansion cage.

The procedures for replacing the PCIe expansion cage are the same for both types.

Note: Both PCIe expansion cages in the server must be the same type.

Remove the PCIe expansion cage

Use this information to remove a PCIe expansion cage.

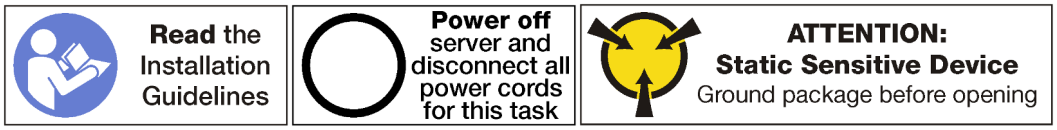

Before removing the PCIe expansion cage:

1. Power off the server. See “Power off the server” on page 13.
2. Disconnect power cords from both power supplies, which are located in the rear of the server.
3. Record the location of the cables in the front of the PCIe adapters that are installed in the I/O expansion cage at the front of the server, and disconnect the cables.
4. Disconnect the management port cable from the management port in the I/O expansion cage, if necessary.
5. Loosen the two captive screws located on the front of the server. If necessary, use a P2 screwdriver to loosen the screws.
6. Pull the server forward until the slide rails click into place.
7. Remove the top cover. See “Remove the top cover” on page 67.
8. Remove the air baffle. See “Remove the air baffle” on page 71.
9. Remove the system fan cage. See “Remove the system fan cage” on page 81.

   Note: You do not need to completely remove the system fan cage. Instead, after removing the system fan cage, carefully place it on the drive cage to get the system fan cage out of the way.

To remove the PCIe expansion cage, complete the following steps:

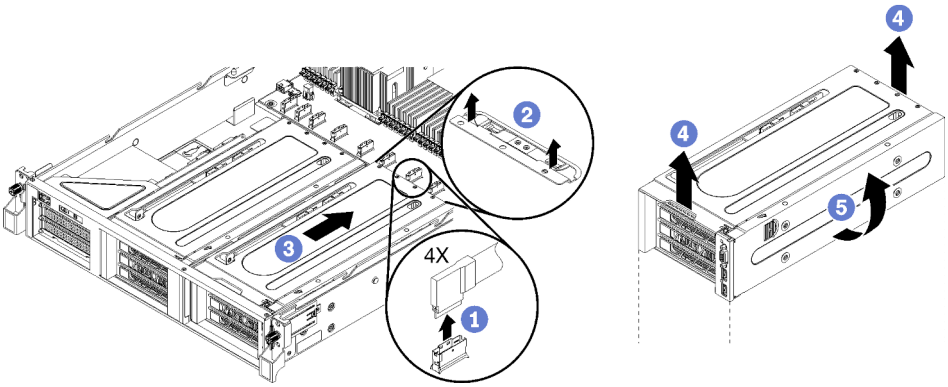

Figure 63. Removing the PCIe expansion cage

Step 1. Disconnect the PCIe cables from the system board to the PCIe expansion cage.

Note: If you are removing PCIe expansion cage 1 and the option USB port assembly or video port is installed, make sure that you loosen the VGA power cable and USB power cable from the front cable routing guide on the right side of the server chassis (as you are looking at the server from the front).

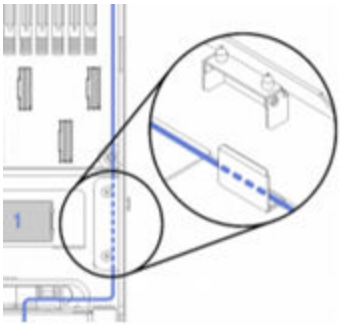

Step 2. Lift up on the retention latches that are located on the system board behind the PCIe expansion cage.

Step 3. Push the expansion cage away from the front of the server.

Step 4. Lift the PCIe expansion cage away from the server chassis.

Step 5. Carefully rotate the expansion cage so that the PCIe expansion cage cover and blue retention latch is at the top.

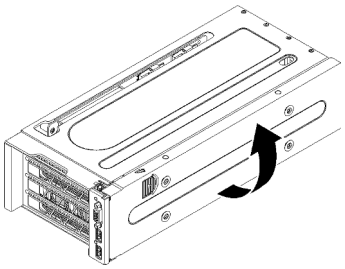

Figure 64. Rotating the PCIe expansion cage up

Step 6. Remove the PCIe expansion cage cover and cable management tray.

The 3-slot expansion cage is shown in this figure. The process for installing the 4-slot expansion cage is the same.

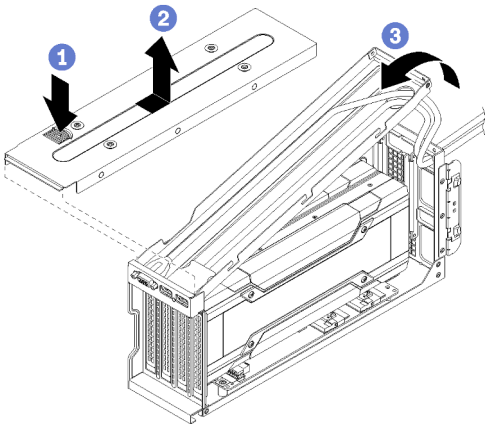

Figure 65. Removing the PCIe expansion cage cover and cable management tray

a. Press the PCIe expansion cage cover retention latch.

b. Lift the expansion cage cover away from the PCIe expansion cage.

c. Push the USB and VGA cables into the cage to create sufficient slack in the cables; then, lift the rear of the cable management tray away from the PCIe expansion cage.

Notes: Optionally, a USB port assembly and a video port can be installed in the cable management tray of PCIe expansion cage 1. If they are installed:

- You do not need to remove the cable management tray unless you are also removing the USB port assembly and video port cables. Instead, you can carefully hang the cable management tray over the side of the server chassis.
- If you are removing the USB cable and the video port cable, you must first remove the drive cage to disconnect the cables from the system board. See "Remove the drive cage" on page 137.

Step 7. Remove the GPU adapters.

- See “Remove a FHFL GPU adapter” on page 120.
- See “Remove a FHHL GPU adapter” on page 122.

Step 8. If you are replacing the PCIe expansion cage, disconnect the power cables from the expansion card in the PCIe expansion cage and the GPU adapters. Also, disconnect the USB cable and video cable from the system board.

Demo video

Watch the procedure on YouTube

Install the PCIe expansion cage

Use this information to install the PCIe expansion cage.

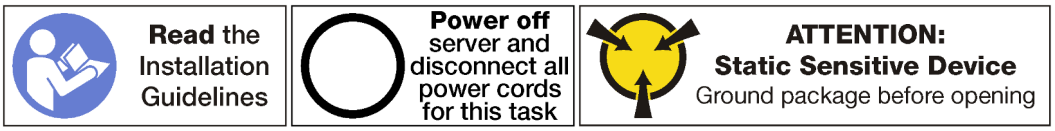

To install the PCIe expansion cage, complete the following steps:

Step 1. Orient the PCIe expansion cage so that the PCIe expansion cage cover is at the top.

Step 2. Install GPU adapters, if necessary.

- See “Remove a FHFL GPU adapter” on page 120.
- See “Remove a FHHL GPU adapter” on page 122.

Step 3. Install the PCIe expansion cage cover and cable management tray, if necessary.

a. Push the USB and VGA cables into the cage to create sufficient slack in the cables; then, position the front of the cable management tray into the PCIe expansion cage and lower the rear of the cable management tray.

Note: Optionally, a USB port assembly and a video port can be installed in the cable management tray of PCIe expansion cage 1. If they are installed, you must remove the drive cage assembly to connect the video port cable 1 and the USB cable 2 to the system board. See “Remove the drive cage” on page 137.

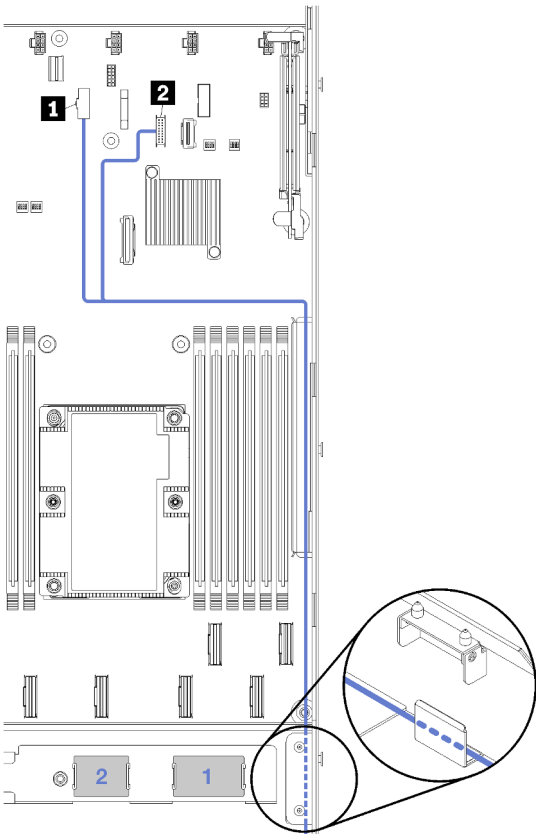

Figure 66. USB and Video connectors on the system board

b. Lower the expansion cage cover onto the PCIe expansion cage and slide it into place.

The 3-slot expansion cage is shown in this figure. The process for installing the 4-slot expansion cage is the same.

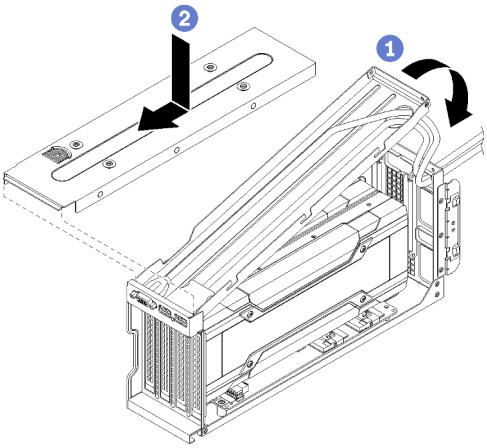

Figure 67. Installing the PCIe expansion cage cover and cable management tray

Step 4. Connect the power cable to the system board. If you are installing PCIe expansion cage 1, make sure that the USB and video cables are connect to the system board as well.

For more information about cabling and system board connections, see:

- “3-slot PCIe expansion cage 1 cable routing” on page 35
- “3-slot PCIe expansion cage 1 cable routing” on page 35
- “4-slot PCIe expansion cage 1 cable routing” on page 38
- “Video and USB cable routing” on page 41
- “3-slot PCIe expansion cage 2 cable routing” on page 44
- “4-slot PCIe expansion cage 2 cable routing” on page 47

Step 5. Rotate the PCIe expansion cage so that the PCIe expansion cage cover is aligned with the right side of the server chassis.

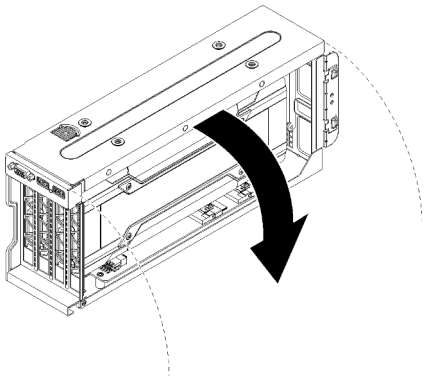

Figure 68. Rotating the PCIe expansion cage down

Step 6. Align the nailheads on the expansion cage with the slots in the server chassis; then, lower the PCIe expansion cage into the server chassis.

Step 7. Slide the expansion cage toward the front of the server until it clicks into place.

The 3-slot expansion cage is shown in this figure. The process for installing the 4-slot expansion cage is the same.

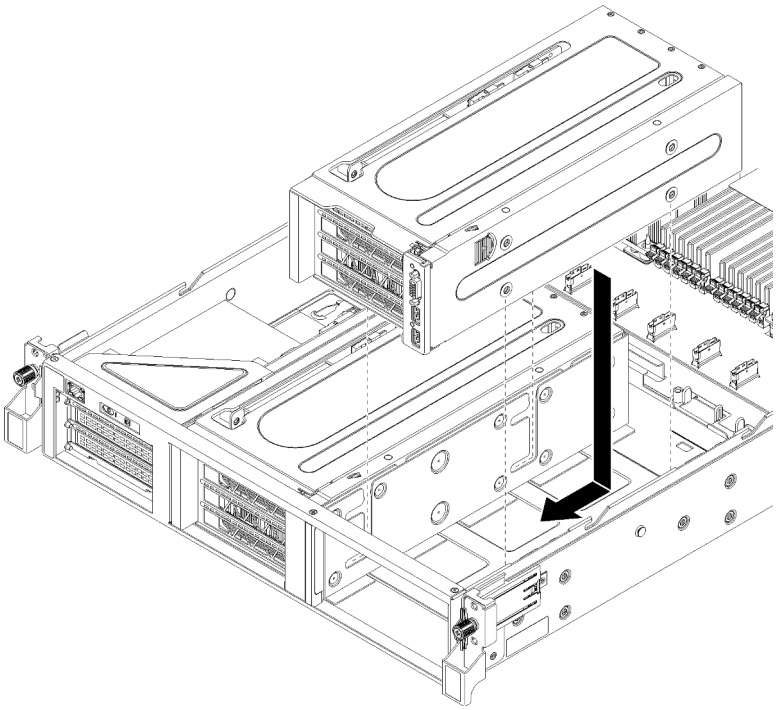

Figure 69. Installing the PCIe expansion cage

Step 8. Connect the PCIe cables from the PCIe expansion cage to the system board.

Step 9. Route the power cables through the guides and gaps located under the fan cage.

For more information about cable routing:

- See "3-slot PCIe expansion cage 1 cable routing" on page 35 for PCIe expansion cage 1 cable routing.

  Note: If you are installing PCIe expansion cage 1, remember to route the USB and VGA cables. See "Video and USB cable routing" on page 41.

- See "3-slot PCIe expansion cage 2 cable routing" on page 44 for PCIe expansion cage 2 cable routing.

After installing the PCIe expansion cage:

1. Install the fan cage. See “Install the system fan cage” on page 84.
2. Install the air baffle. See “Install the air baffle” on page 72.
3. Install the top cover. See “Install the top cover” on page 69.
4. Push up on the latches on the slide rails and push the server back into the rack.
5. Tighten the two captive screws located on the front of the server to secure the server in the rack.

   Note: Always secure the system in the rack if your are moving the rack.
6. Connect all cables to the ports on the front of the server, including the management port, if necessary, and all PCIe adapter ports. The management port and PCIe adapter ports are located in the I/O expansion cage.
7. Connect power cords to both power supplies, which are located at the rear of the server.

Demo video

Watch the procedure on YouTube

GPU adapter replacement

Use this information to remove and install the GPU.

Two types of GPU can be installed in the server:

- Double-width, full-height, full-length (FHFL) GPUs, which can be installed in the 3-slot PCIe expansion cage only:
- Single-width, full-height, half-length (FHHL) GPUs, which can be installed in the 4-slot PCIe expansion cage or in the 3-socket PCIe expansion cage:

T

Note: If you choose to install a single-width, full-height, half-length GPU in the 3-socket PCIe Expansion Cage, you must install in either the top slot of the bottom slot. The middle slot does not have PCIe connectivity.

Remove a FHFL GPU adapter

Use this information to remove a double-width, full-height, full-length (FHFL) GPU adapter.

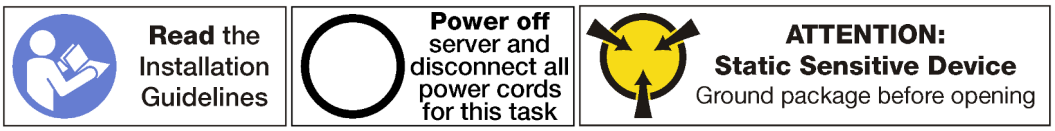

Notes:

- Depending on the specific type, your GPU adapter might look different from the illustrations in this topic.
- Use any documentation that comes with the GPU adapter and follow those instructions in addition to the instructions in this topic.

Before removing a GPU adapter:

1. Power off the server. See “Power off the server” on page 13.
2. Disconnect power cords from both power supplies, which are located in the rear of the server.
3. Record the location of the cables in the front of the PCIe adapters that are installed in the I/O expansion cage at the front of the server, and disconnect the cables.
4. Disconnect the management port cable from the management port in the I/O expansion cage, if necessary.
5. Loosen the two captive screws located on the front of the server. If necessary, use a P2 screwdriver to loosen the screws.
6. Pull the server forward until the slide rails click into place.
7. Remove the top cover. See “Remove the top cover” on page 67.
8. Remove the air baffle. See “Remove the air baffle” on page 71.
9. Remove the system fan cage. See “Remove the system fan cage” on page 81.
10. Remove the PCIe expansion cage. See “Remove the PCIe expansion cage” on page 113.
11. Remove the PCIe expansion cage cover and cable tray.

To remove an FHFL GPU adapter, complete the following steps:

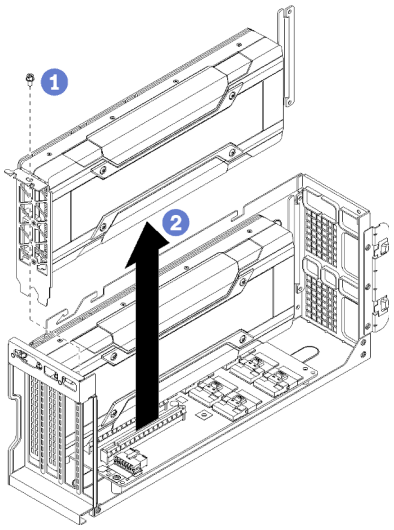

Figure 70. Removing an FHFL GPU adapter

Step 1. Remove the GPU adapter power cable from the GPU adapter (not shown).

Notes:

- If you are removing the top GPU, press the power cable release through the oval opening in the expansion cage.

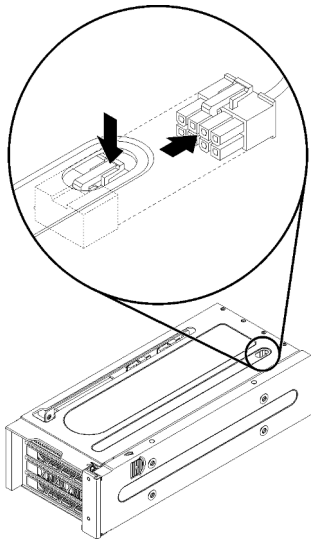

Figure 71. Removing the top GPU

- If you are removing the bottom GPU, make sure that you remove the power cable from the top GPU as well.

Step 2. Remove the GPU adapter retention screw.

Step 3. Lift the GPU adapter away from the PCIe expansion cage.

Demo video

Watch the procedure on YouTube

Remove a FHHL GPU adapter

Use this information to remove a single-width, full-height, half-length (FHHL) GPU adapter.

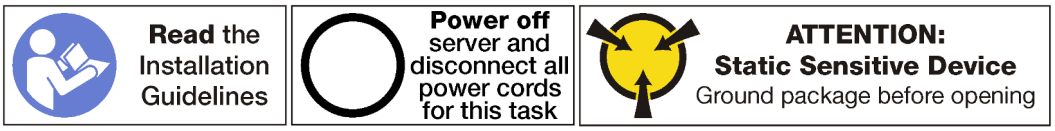

Notes:

- Depending on the specific type, your GPU adapter might look different from the illustrations in this topic.
- Use any documentation that comes with the GPU adapter and follow those instructions in addition to the instructions in this topic.

Before removing a GPU adapter:

1. Power off the server. See "Power off the server" on page 13.
2. Disconnect power cords from both power supplies, which are located in the rear of the server.
3. Record the location of the cables in the front of the PCIe adapters that are installed in the I/O expansion cage at the front of the server, and disconnect the cables.
4. Disconnect the management port cable from the management port in the I/O expansion cage, if necessary.
5. Loosen the two captive screws located on the front of the server. If necessary, use a P2 screwdriver to loosen the screws.
6. Pull the server forward until the slide rails click into place.
7. Remove the top cover. See "Remove the top cover" on page 67.
8. Remove the air baffle. See "Remove the air baffle" on page 71.
9. Remove the system fan cage. See "Remove the system fan cage" on page 81.
10. Remove the PCIe expansion cage. See "Remove the PCIe expansion cage" on page 113.
11. Remove the PCIe expansion cage cover and cable tray.

To remove an FHHL GPU adapter, complete the following steps:

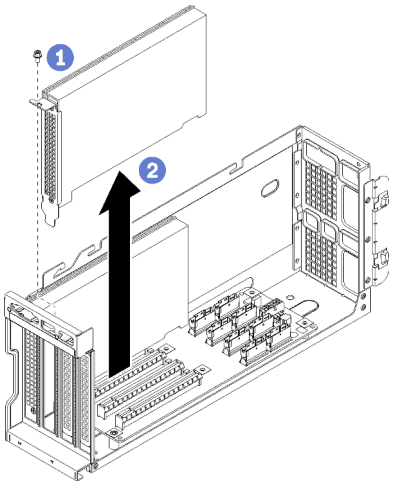

Figure 72. Removing an FHHL GPU adapter

Step 1. Remove the GPU adapter retention screw.

Step 2. Lift the GPU adapter away from the PCIe expansion cage.

Install a FHFL GPU adapter

Use this information to install a double-width, full-height, full-length (FHFL) GPU adapter.

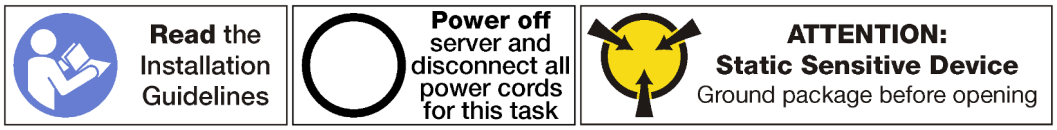

Notes:

- Depending on the specific type, your GPU adapter might look different from the illustrations in this topic.

- Use any documentation that comes with the GPU adapter and follow those instructions in addition to the instructions in this topic.

Before installing a GPU adapter:

1. Touch the static-protective package that contains the new GPU adapter to any unpainted surface on the outside of the server. Then, take the new GPU adapter out of the package and place it on a static-protective surface.
2. Power off the server. See "Power off the server" on page 13.
3. Disconnect power cords from both power supplies, which are located in the rear of the server.
4. Record the location of the cables in the front of the PCIe adapters that are installed in the I/O expansion cage at the front of the server, and disconnect the cables.
5. Disconnect the management port cable from the management port in the I/O expansion cage, if necessary.
6. Loosen the two captive screws located on the front of the server. If necessary, use a P2 screwdriver to loosen the screws.
7. Pull the server forward until the slide rails click into place.
8. Remove the top cover. See "Remove the top cover" on page 67.
9. Remove the air baffle. See "Remove the air baffle" on page 71.
10. Remove the system fan cage. See "Remove the system fan cage" on page 81.

    Note: You do not need to completely remove the system fan cage. Instead, after removing the system fan cage, carefully place it on the drive cage to get the system fan cage out of the way.
11. Remove the PCIe expansion cage if it is not already removed. See "Remove the PCIe expansion cage" on page 113.
12. Remove the velcro strap that secures the PCIe cables to the PCIe expansion cage. The velcro strap is designed to ensure that the PCIe cables are secured for shipping. However, when the server is installed, removing the velcro strap will make it easier to install a GPU adapter.

To install an FHFL GPU adapter, complete the following steps:

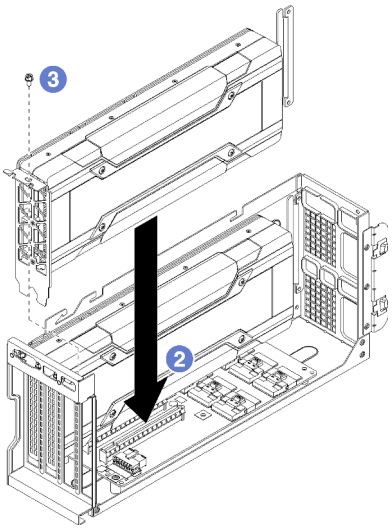

Figure 73. Installing an FHFL GPU adapter

Step 1. Connect the power cable to the GPU.

Note: If you removed the power cable connecting the top GPU to the bottom GPU, make sure that you reconnect the power cable to the top GPU before installing the PCIe expansion cage back into the system.

Step 2. Align the GPU adapter with the PCIe slot on the PCIe expansion cage. Then, carefully press the GPU adapter straight into the slot until it is securely seated.

Step 3. Install the GPU adapter retention screw.

Step 4. Attach the GPU adapter power cable to the rear of the adapter.

After installing the GPU adapter:

1. Install the PCIe expansion cage. See "Install the PCIe expansion cage" on page 116.
2. Install the drive cage (if you removed it to install the video cable and the USB cables). See "Install the drive cage" on page 138.
3. Install the fan cage. See "Install the system fan cage" on page 84.
4. Install the air baffle. See "Install the air baffle" on page 72.
5. Install the top cover. See "Install the top cover" on page 69.
6. Push up on the latches on the slide rails and push the server back into the rack.
7. Tighten the two captive screws located on the front of the server to secure the server in the rack.

   Note: Always secure the system in the rack if your are moving the rack.
8. Connect all cables to the ports on the front of the server, including the management port, if necessary, and all PCIe adapter ports. The management port and PCIe adapter ports are located in the I/O expansion cage.
9. Connect power cords to both power supplies, which are located at the rear of the server.

Demo video

Watch the procedure on YouTube

Install a FHHL GPU adapter

Use this information to install single-width, full-height, half-length (FHHL) GPU adapter.

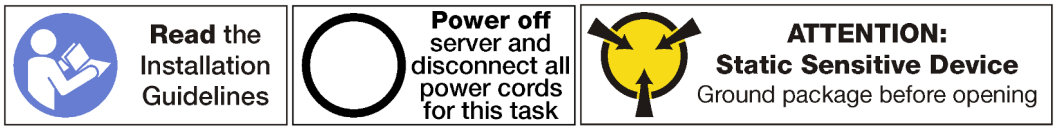

Notes:

- Depending on the specific type, your GPU adapter might look different from the illustrations in this topic.
- Use any documentation that comes with the GPU adapter and follow those instructions in addition to the instructions in this topic.

Before installing a GPU adapter:

1. Touch the static-protective package that contains the new GPU adapter to any unpainted surface on the outside of the server. Then, take the new GPU adapter out of the package and place it on a static-protective surface.
2. Power off the server. See "Power off the server" on page 13.
3. Disconnect power cords from both power supplies, which are located in the rear of the server.

4. Record the location of the cables in the front of the PCIe adapters that are installed in the I/O expansion cage at the front of the server, and disconnect the cables.
5. Disconnect the management port cable from the management port in the I/O expansion cage, if necessary.
6. Loosen the two captive screws located on the front of the server. If necessary, use a P2 screwdriver to loosen the screws.
7. Pull the server forward until the slide rails click into place.
8. Remove the top cover. See "Remove the top cover" on page 67.
9. Remove the air baffle. See "Remove the air baffle" on page 71.
10. Remove the system fan cage. See "Remove the system fan cage" on page 81.

    Note: You do not need to completely remove the system fan cage. Instead, after removing the system fan cage, carefully place it on the drive cage to get the system fan cage out of the way.
11. Remove the PCIe expansion cage if it is not already removed. See "Remove the PCIe expansion cage" on page 113.
12. If the GPU adapter has a power connector, remove the velcro strap that secures the PCIe cables to the PCIe expansion cage. The velcro strap is designed to ensure that the PCIe cables are secured for shipping. However, when the server is installed, removing the velcro strap will make it easier to install a GPU adapter.

To install an FHHL GPU adapter, complete the following steps:

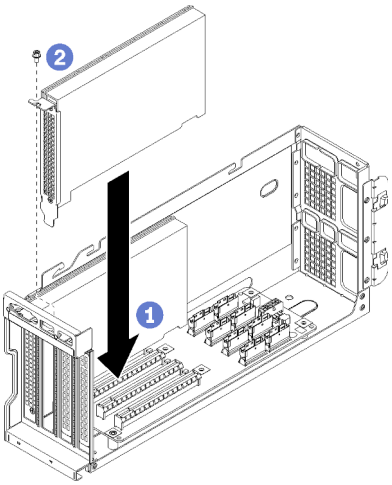

Figure 74. Installing an FHHL GPU adapter

Step 1. Align the GPU adapter with the PCIe slot on the PCIe expansion cage. Then, carefully press the GPU adapter straight into the slot until it is securely seated.

Step 2. Install the GPU adapter retention screw.

Step 3. Attach the GPU adapter power cable to the rear of the adapter, if necessary.

If the GPU adapter does not have a power connector, make sure that you use the velcro strap to secure the PCIe cables to the PCIe expansion cage.

After installing the GPU adapter:

1. Install the PCIe expansion cage. See "Install the PCIe expansion cage" on page 116.

2. Install the drive cage (if you removed it to install the video cable and the USB cables). See “Install the drive cage” on page 138.
3. Install the fan cage. See “Install the system fan cage” on page 84.
4. Install the air baffle. See “Install the air baffle” on page 72.
5. Install the top cover. See “Install the top cover” on page 69.
6. Push up on the latches on the slide rails and push the server back into the rack.
7. Tighten the two captive screws located on the front of the server to secure the server in the rack.

   Note: Always secure the system in the rack if your are moving the rack.
8. Connect all cables to the ports on the front of the server, including the management port, if necessary, and all PCIe adapter ports. The management port and PCIe adapter ports are located in the I/O expansion cage.
9. Connect power cords to both power supplies, which are located at the rear of the server.

AMD Radeon Instinct MI25 GPU adapter replacement

Use this information to remove and install the AMD Radeon Instinct MI25 GPU.

The AMD Radeon Instinct MI25 GPU adapter has two power connectors (1) on the rear of the adapter. It is shipped with a y-cable that is designed to split the eight power connectors from the PCIe expansion cage power cable into dual connectors (one with eight connectors and one with 6 connectors). This y-cable is also known as a *BNR Mini-Fit Extender 2*.

Rear view of AMD Radeon Instinct MI25 GPU adapter

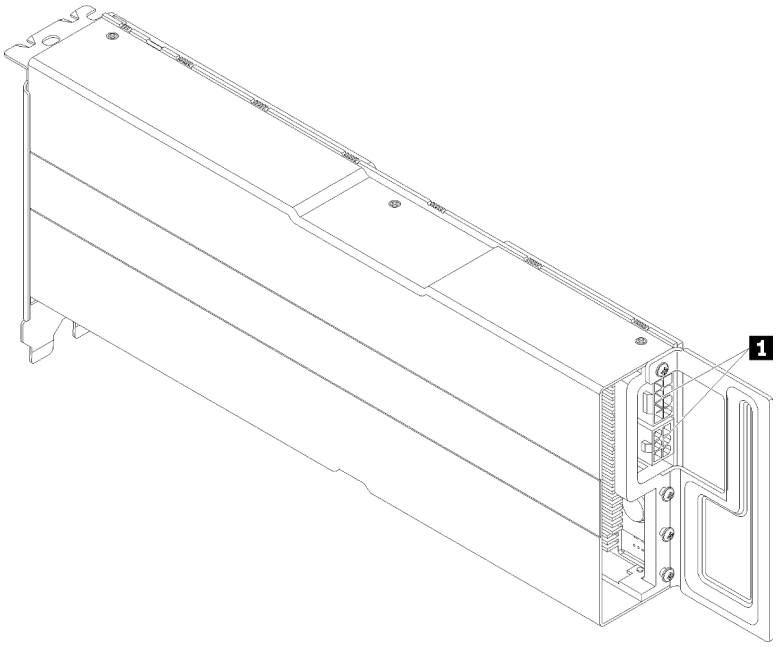

Remove an AMD Radeon Instinct MI25 GPU adapter

Use this information to remove a AMD Radeon Instinct MI25 GPU adapter.

Read the Installation Guidelines	**Power off** server and disconnect all power cords for this task	**ATTENTION:** **Static Sensitive Device** Ground package before opening

Before removing an AMD Radeon Instinct MI25:

1. Power off the server. See "Power off the server" on page 13.
2. Disconnect power cords from both power supplies, which are located in the rear of the server.
3. Record the location of the cables in the front of the PCIe adapters that are installed in the I/O expansion cage at the front of the server, and disconnect the cables.
4. Disconnect the management port cable from the management port in the I/O expansion cage, if necessary.
5. Loosen the two captive screws located on the front of the server. If necessary, use a P2 screwdriver to loosen the screws.
6. Pull the server forward until the slide rails click into place.
7. Remove the top cover. See "Remove the top cover" on page 67.
8. Remove the air baffle. See "Remove the air baffle" on page 71.
9. Remove the system fan cage. See "Remove the system fan cage" on page 81.
10. Remove the PCIe expansion cage. See "Remove the PCIe expansion cage" on page 113.
11. Remove the PCIe expansion cage cover and cable tray.

To remove an AMD Radeon Instinct MI25, complete the following steps:

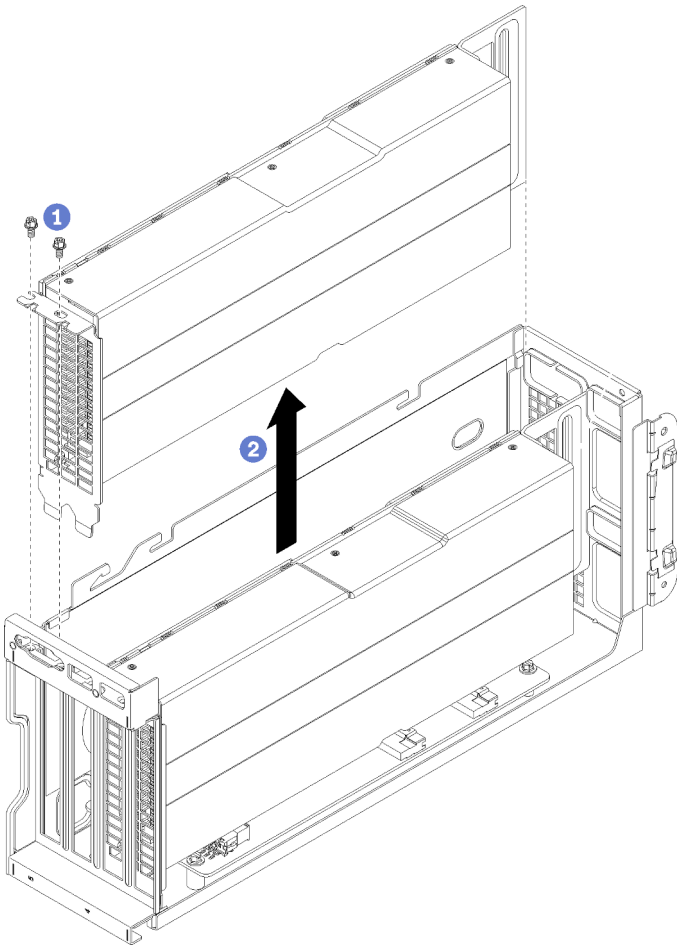

Figure 75. Removing a GPU adapter

Step 1. Remove the GPU adapter retention screw.

Step 2. Lift the GPU adapter away from the PCIe expansion cage.

Step 3. Remove the y-power cable from the rear of the GPU adapter connectors (1).

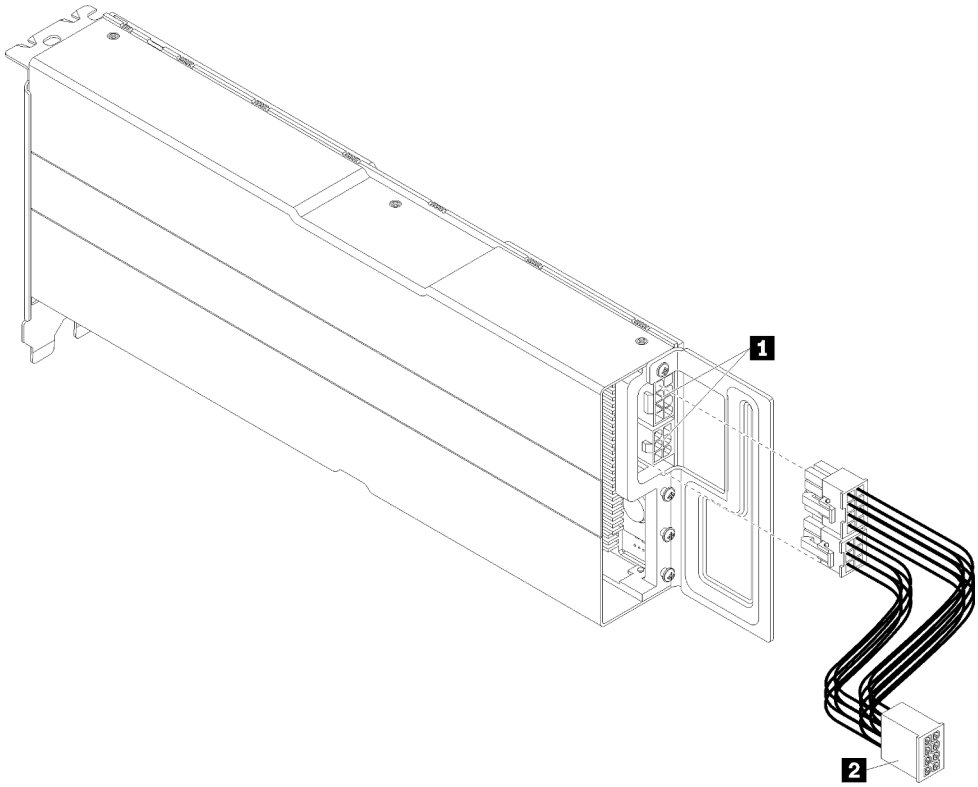

Figure 76. Removing the y-power cable to the GPU adapter

Install an AMD Radeon Instinct MI25 GPU adapter

Use this information to install an AMD Radeon Instinct MI25 GPU adapter.

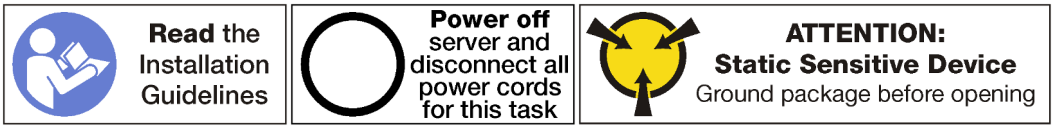

Before installing an AMD Radeon Instinct MI25 GPU adapter:

1. Touch the static-protective package that contains the new GPU adapter to any unpainted surface on the outside of the server. Then, take the new GPU adapter out of the package and place it on a static-protective surface.
2. Power off the server. See “Power off the server” on page 13.
3. Disconnect power cords from both power supplies, which are located in the rear of the server.
4. Record the location of the cables in the front of the PCIe adapters that are installed in the I/O expansion cage at the front of the server, and disconnect the cables.
5. Disconnect the management port cable from the management port in the I/O expansion cage, if necessary.
6. Loosen the two captive screws located on the front of the server. If necessary, use a P2 screwdriver to loosen the screws.
7. Pull the server forward until the slide rails click into place.
8. Remove the top cover. See “Remove the top cover” on page 67.
9. Remove the air baffle. See “Remove the air baffle” on page 71.

10. Remove the system fan cage. See “Remove the system fan cage” on page 81.

    Note: You do not need to completely remove the system fan cage. Instead, after removing the system fan cage, carefully place it on the drive cage to get the system fan cage out of the way.

11. Remove the PCIe expansion cage if it is not already removed. See “Remove the PCIe expansion cage” on page 113.
12. Remove the velcro strap that secures the PCIe cables to the PCIe expansion cage. The velcro strap is designed to ensure that the PCIe cables are secured for shipping. However, when the server is installed, removing the velcro strap will make it easier to install a GPU adapter.
13. Connect the y-power cable (2) to the PCIe expansion cage power cable that is connected to the system board.
14. Attach the y-power cable to the connectors (1) on the AMD Radeon Instinct MI25 GPU adapter.

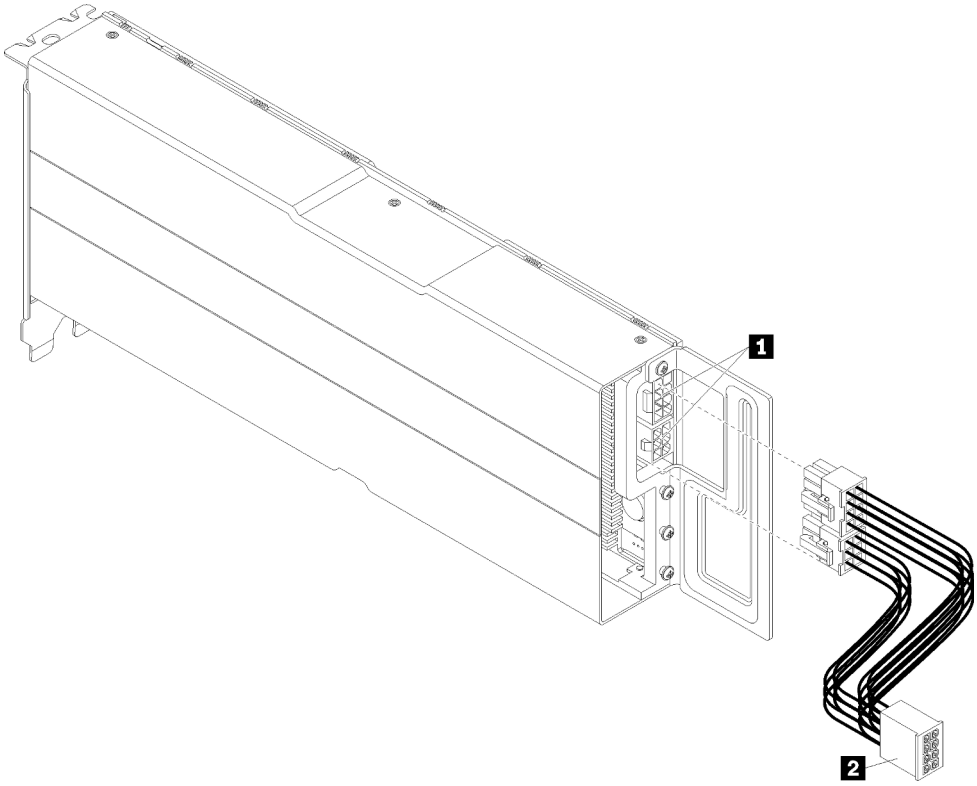

Figure 77. Attaching the y-power cable to the GPU adapter

To install an AMD Radeon Instinct MI25 GPU adapter, complete the following steps:

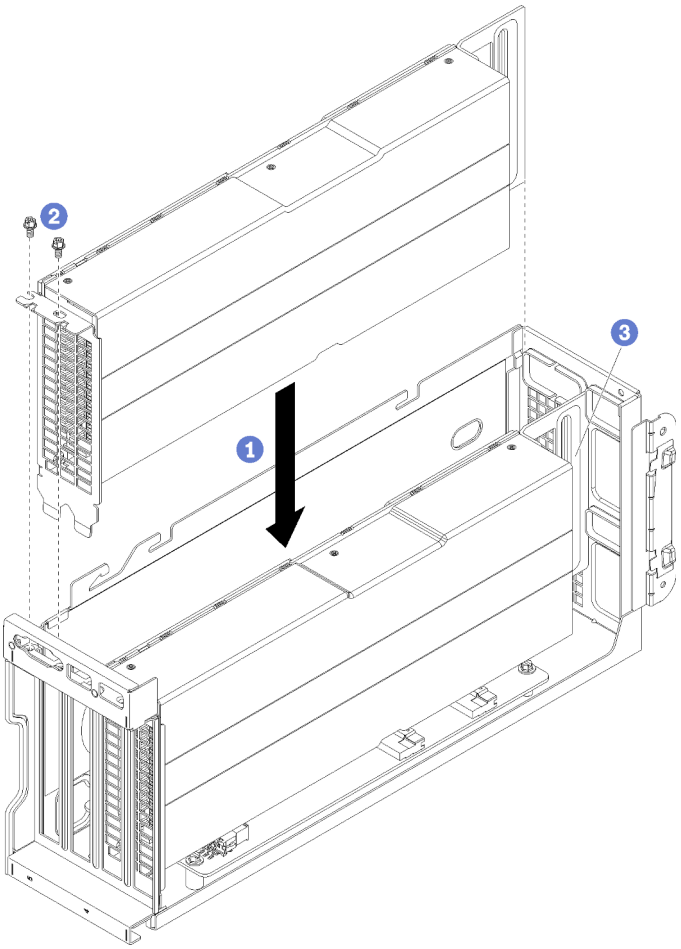

Figure 78. Installing an AMD Radeon Instinct MI25 GPU adapter

Step 1. Align the GPU adapter with the PCIe slot on the PCIe expansion cage. Then, carefully press the GPU adapter straight into the slot until it is securely seated.

Step 2. Install the GPU adapter retention screw.

Step 3. **Important:** Tuck the y–power cable into the GPU adapter housing to get the cable out of the way (3).

After installing the GPU adapter:

1. Install the PCIe expansion cage. See "Install the PCIe expansion cage" on page 116.
2. Install the drive cage (if you removed it to install the video cable and the USB cables). See "Install the drive cage" on page 138.
3. Install the fan cage. See "Install the system fan cage" on page 84.
4. Install the air baffle. See "Install the air baffle" on page 72.
5. Install the top cover. See "Install the top cover" on page 69.
6. Push up on the latches on the slide rails and push the server back into the rack.
7. Tighten the two captive screws located on the front of the server to secure the server in the rack.

   Note: Always secure the system in the rack if your are moving the rack.

8. Connect all cables to the ports on the front of the server, including the management port, if necessary, and all PCIe adapter ports. The management port and PCIe adapter ports are located in the I/O expansion cage.
9. Connect power cords to both power supplies, which are located at the rear of the server.

Expansion cage card replacement

The same expansion cage card is used in the PCIe expansion cages and in the I/O expansion cage. Use these procedures to remove and install the expansion cage card.

Two types of expansion cage cards are available:

- 3-slot expansion cage card.

  The 3-slot expansion cage card can be used in either the I/O expansion cage or the PCIe expansion cage. When used in the PCIe expansion cage, the top and bottom slots must be used. The middle slot has no PCIe connectivity.
- 4-slot expansion cage card.

  The 4-slot expansion cage card can be used in the PCIe expansion cage only.

Note: PCIe expansion cage 1 and PCIe expansion cage 2 must use the same type of expansion cage card.

The installation and removal processes are the same for both types of expansion cage cards.

Remove an expansion cage card

Use this information to remove an expansion cage card.

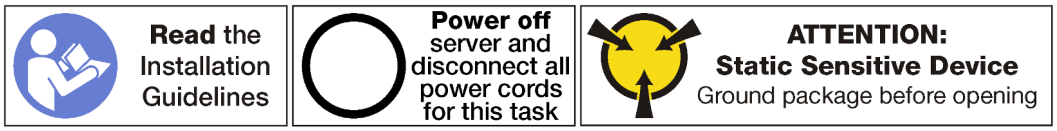

Before removing an expansion cage card:

1. Power off the server. See “Power off the server” on page 13.
2. Disconnect power cords from both power supplies, which are located in the rear of the server.
3. Record the location of the cables in the front of the PCIe adapters that are installed in the I/O expansion cage at the front of the server, and disconnect the cables.
4. Disconnect the management port cable from the management port in the I/O expansion cage, if necessary.
5. Loosen the two captive screws located on the front of the server. If necessary, use a P2 screwdriver to loosen the screws.
6. Pull the server forward until the slide rails click into place.
7. Remove the top cover. See “Remove the top cover” on page 67.
8. Remove the air baffle. See “Remove the air baffle” on page 71.
9. Remove the system fan cage. See “Remove the system fan cage” on page 81.
10. Remove the expansion cage:
    - If you are removing the expansion cage card for one of the PCIe expansion cages, see “Remove the PCIe expansion cage” on page 113.
    - If you are removing the expansion cage card for the I/O expansion cage, see “Remove the I/O expansion cage” on page 86.

To remove an expansion cage card, complete the following steps:

The 3-slot expansion cage card is shown in this figure. The process for removing the 4-slot expansion cage card is the same.

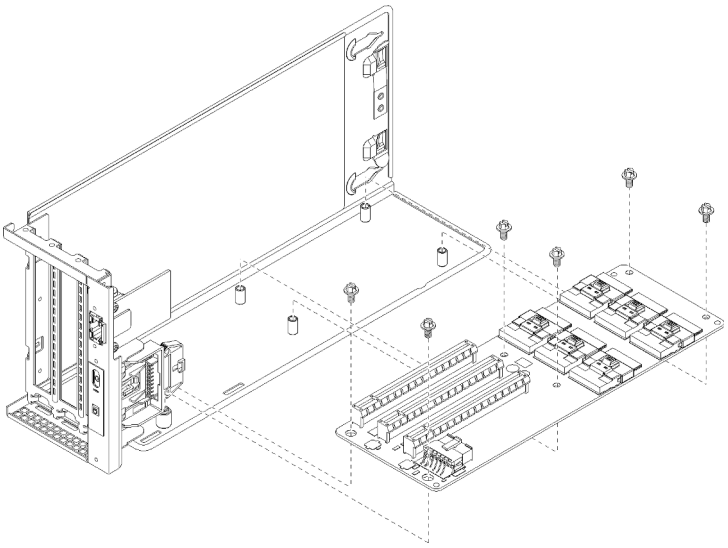

Figure 79. Removing the expansion card screws

Step 1. Remove the adapters that are installed on the PCIe expansion cage or the I/O expansion cage.

- “Remove a FHFL GPU adapter” on page 120.
- “Remove a PCIe adapter from the I/O expansion cage” on page 91.

Step 2. Disconnect all cables from the expansion card.

Step 3. Remove the six screws that connect the card to the expansion cage.

Step 4. Lift the expansion cage card away from the expansion cage.

If you are instructed to return the old expansion cage card, follow all packaging instructions and use any packaging materials that are provided.

Demo video

Watch the procedure on YouTube

Install an expansion cage card

Use this information to install an expansion cage card.

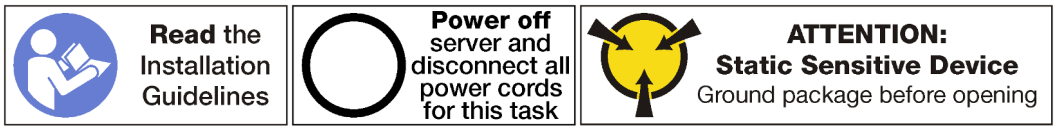

Before installing an expansion cage card, touch the static-protective package that contains the new expansion cage card to any unpainted surface on the outside of the server. Then, take the new expansion cage card out of the package and place it on a static-protective surface.

To install an expansion cage card, complete the following steps:

Watch the procedure. A video of the installation process is available:
- Youtube
- Youku

Step 1. Align the holes in the expansion cage card with the mounting studs on the expansion cage. Then, install the expansion cage card to the bracket in the direction as shown. Ensure that the screw holes in the expansion cage card align with the corresponding holes in the bracket.

The 3-slot expansion cage card is shown in this figure. The process for installing the 4-slot expansion cage card is the same.

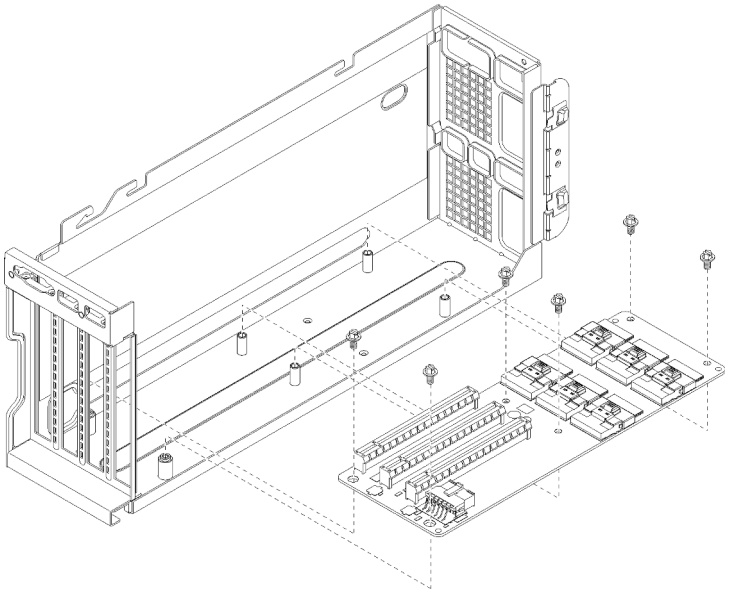

Figure 80. Installing an expansion cage card

Step 2. Install the six screws to secure the expansion cage card to the bracket.

Step 3. Connect all cables to the expansion cage card.

Notes:

- For the I/O expansion cage, PCIe connectors A, B, C, D, E, and the power cable must be connected.
- For a 3-slot PCIe expansion cage, PCIe connectors A, B, E, F, and the power cable must be connected.
- For a 4-slot PCIe expansion cage, PCIe connectors A, C, E, G, and the power cable must be connected.

Step 4. Set the jumper on the cage card.

Notes:

- For the I/O expansion cage, set jumper 11 (J11) to **Default**.
- For a PCIe Expansion Cage, set jumber 11 (J11) to **Inverted**

For more information about system jumpers, see "Jumper settings" on page 24.

Step 5. Reinstall the GPU adapters or the PCIe adapters into the new expansion cage card.

- "Install a FHFL GPU adapter" on page 123.
- "Install a FHHL GPU adapter" on page 125.
- "Install a PCIe adapter in the I/O expansion cage" on page 93.

After installing the expansion cage card:

1. Install the expansion cage:
   a. If you are installing the expansion cage card for one of the PCIe expansion cages, see “Install the PCIe expansion cage” on page 116.
   b. If you are installing the expansion cage card for the I/O expansion cage, see “Install the I/O expansion cage” on page 89.
2. Make sure that all cables are routed correctly. See “Internal cable routing” on page 27.
3. Install the fan cage. See “Install the system fan cage” on page 84.
4. Install the air baffle. See “Install the air baffle” on page 72.
5. Install the top cover. See “Install the top cover” on page 69.
6. Push up on the latches on the slide rails and push the server back into the rack.
7. Tighten the two captive screws located on the front of the server to secure the server in the rack.

   Note: Always secure the system in the rack if your are moving the rack.
8. Connect all cables to the ports on the front of the server, including the management port, if necessary, and all PCIe adapter ports. The management port and PCIe adapter ports are located in the I/O expansion cage.
9. Connect power cords to both power supplies, which are located at the rear of the server.

Demo video

Watch the procedure on YouTube

Drive cage replacement

Use this information to remove and install the drive cage.

Remove the drive cage

Use this information to remove the drive cage.

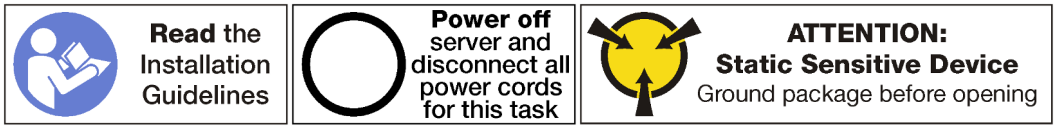

Before removing the drive cage:

1. Power off the server. See “Power off the server” on page 13.
2. Disconnect power cords from both power supplies, which are located in the rear of the server.
3. Loosen the two captive screws located on the rear of the server that secure the drive cage to the server chassis.
4. Record the location of the cables in the front of the PCIe adapters that are installed in the I/O expansion cage at the front of the server, and disconnect the cables.
5. Disconnect the management port cable from the management port in the I/O expansion cage, if necessary.
6. Loosen the two captive screws located on the front of the server. If necessary, use a P2 screwdriver to loosen the screws.
7. Pull the server forward until the slide rails click into place.
8. Remove the top cover. See “Remove the top cover” on page 67.
9. Remove the air baffle. See “Remove the air baffle” on page 71.

To remove the drive cage, complete the following steps:

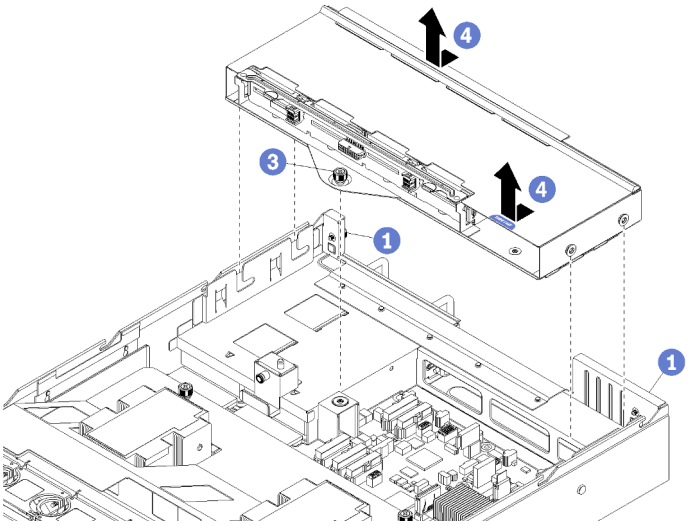

Figure 81. Removing the drive cage

Step 1. Make sure that the two captive screws located on the rear of the server are loosened.

Step 2. Disconnect the three cables (two data cables and one power cable) that are connected to the 2.5-inch-drive backplane (not shown).

Step 3. Loosen the captive screw that is connecting the drive cage to the server chassis, using a P2 screwdriver if necessary.

Step 4. Slide the drive cage back and lift it out of the server chassis.

Install the drive cage

Use this information to install the drive cage.

Read the Installation Guidelines	**Power off** server and disconnect all power cords for this task	**ATTENTION: Static Sensitive Device** Ground package before opening

To install the drive cage, complete the following steps:

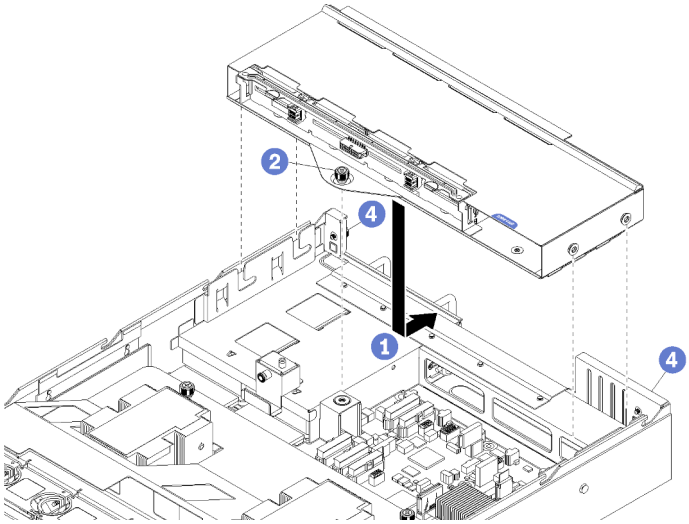

Figure 82. Installing the drive cage

Step 1. Align the guideposts on the drive cage with the slots in the server chassis and lower the drive cage and then slide it rearward until the drive cage fits snuggly against the rear of the server chassis.

Step 2. Tighten the single internal captive screw to secure the drive cage in place.

Step 3. Connect the three cables (two data cables and one power cable) to the 2.5-inch-drive backplane.

After installing the drive cage:

1. Install the air baffle. See "Install the air baffle" on page 72.
2. Install the top cover. See "Install the top cover" on page 69.
3. Push up on the latches on the slide rails and push the server back into the rack.
4. Tighten the two captive screws located on the front of the server to secure the server in the rack.

   Note: Always secure the system in the rack if your are moving the rack.
5. Connect all cables to the ports on the front of the server, including the management port, if necessary, and all PCIe adapter ports. The management port and PCIe adapter ports are located in the I/O expansion cage.
6. Tighten the two captive screws located on the rear of the server using a P2 screwdriver.
7. Connect power cords to both power supplies, which are located at the rear of the server.

Hard drive backplane replacement

Use this information to remove and install a hard drive backplane.

Remove the hard-drive backplane

Use this information to remove the hard-drive backplane.

Read the Installation Guidelines	**Power off** server and disconnect all power cords for this task	**ATTENTION: Static Sensitive Device** Ground package before opening

Before removing the hard-drive backplane:

1. Power off the server. See "Power off the server" on page 13.
2. Disconnect power cords from both power supplies, which are located in the rear of the server.
3. Disengage the hard drives from the hard drive bays. You do not need to actually remove the hard drives; but you do need to disengage them from the hard drive backplane.
4. Loosen the two captive screws located on the rear of the server that secure the drive cage to the server chassis.
5. Record the location of the cables in the front of the PCIe adapters that are installed in the I/O expansion cage at the front of the server, and disconnect the cables.
6. Disconnect the management port cable from the management port in the I/O expansion cage, if necessary.
7. Loosen the two captive screws located on the front of the server. If necessary, use a P2 screwdriver to loosen the screws.
8. Pull the server forward until the slide rails click into place.
9. Remove the top cover. See "Remove the top cover" on page 67.

To remove the hard-drive backplane, complete the following steps:

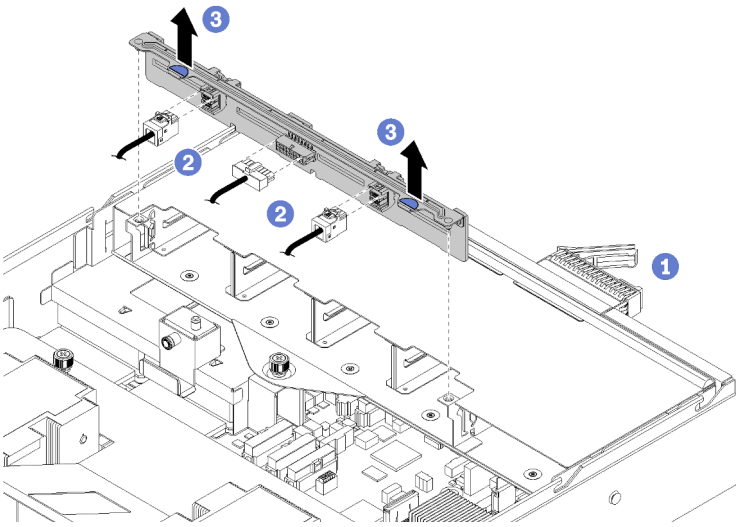

Figure 83. Removing the hard drive backplane

Step 1. Make sure that the two captive screws located on the rear of the server are loosened.

Step 2. Make sure that all hard drives are disengaged.

Step 3. Disconnect the three cables from the drive backplane (two data cables and one power cable).

Step 4. Grasp the blue tabs on the backplane and lift the backplane straight up from the drive cage.

Demo video

Watch the procedure on YouTube

Install the hard drive backplane

Use this information to install the 2.5-inch-drive backplane.

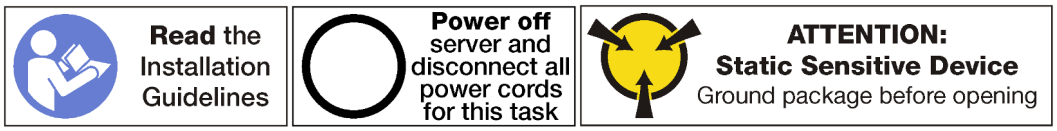

Before installing the 2.5-inch-drive backplane, touch the static-protective package that contains the new backplane to any unpainted surface on the outside of the server. Then, take the new backplane out of the package and place it on a static-protective surface.

To install the 2.5-inch-drive backplane, complete the following steps:

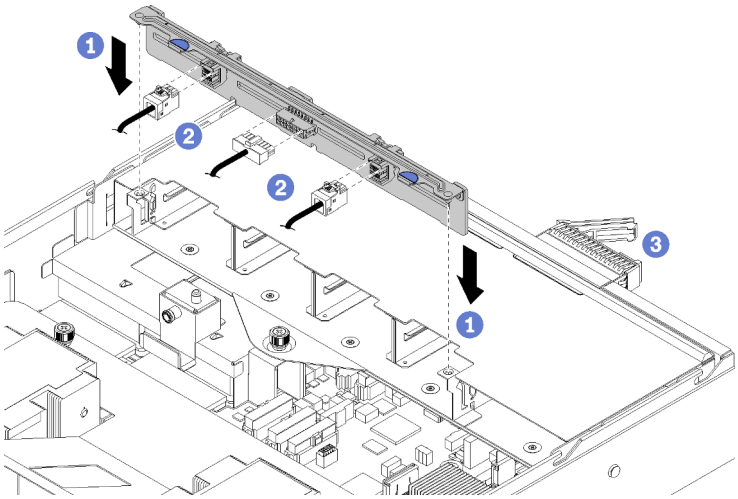

Figure 84. Installing the hard-drive backplane

Step 1. Align the bottom of the backplane with the slots on the drive cage and push down on the drive backplane.

Step 2. Connect the three cables to the drive backplane (two data cables and one power cable).

Step 3. Reinstall all the drives and fillers (if any) into the drive bays. See "Install a hot-swap drive" on page 143.

After installing the 2.5-inch-drive backplane:

1. Install the top cover. See "Install the top cover" on page 69.
2. Push up on the latches on the slide rails and push the server back into the rack.
3. Tighten the two captive screws located on the front of the server to secure the server in the rack.

   Note: Always secure the system in the rack if your are moving the rack.
4. Connect all cables to the ports on the front of the server, including the management port, if necessary, and all PCIe adapter ports. The management port and PCIe adapter ports are located in the I/O expansion cage.
5. Make sure that all hard drives are fully installed in the hard drive bays.
6. Tighten the two captive screws located on the rear of the server using a P2 screwdriver.
7. Connect power cords to both power supplies, which are located at the rear of the server.

Demo video

Watch the procedure on YouTube

Hard disk drive replacement

Use this information to remove and install a hard disk driive. You can remove or install a hard disk drive without powering off the server, which helps you avoid significant interruption to the operation of the system.

Notes:

- Use any documentation that comes with the drive and follow those instructions in addition to the instructions in this topic. Ensure that you have all the cables and other equipment that are specified in the documentation that comes with the drive.
- The electromagnetic interference (EMI) integrity and cooling of the server are protected by having all drive bays covered or occupied. The vacant bays are either covered by an EMI-protective panel or occupied by drive fillers. When installing a drive, save the removed drive filler in case that you later remove the drive and need the drive filler to cover the place.
- To avoid damage to the drive connectors, ensure that the top cover is in place and fully closed whenever you install or remove a drive.

Remove a hard disk drive

Use this information to remove a hard disk drive.

Before removing a hot-swap drive, make sure that you have backed up the data on your drive.

Attention: To ensure that there is adequate system cooling, do not operate the server for more than two minutes without either a drive or a drive filler installed in each bay.

To remove a hard disk drive, complete the following steps:

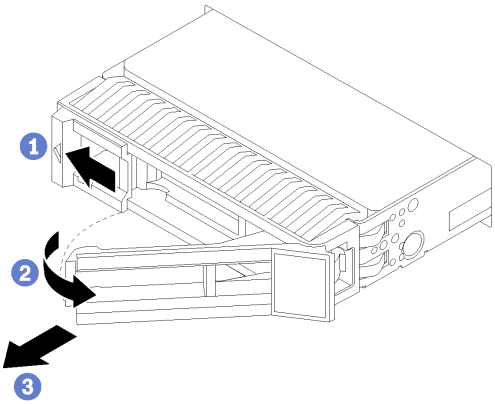

Figure 85. Removing a hard disk drive

Step 1. Slide the release latch to open the drive tray handle.

Step 2. Open the drive handle.

Step 3. Grasp the handle and slide the drive out of the drive bay.

After removing a hot-swap drive:

1. Install the drive filler or a new drive to cover the drive bay. See "Install a hot-swap drive" on page 143.

Demo video

Watch the procedure on YouTube

Install a hot-swap drive

Use this information to install a hot-swap drive.

The drive bays are numbered to indicate the installation order (starting from number "0"). Follow the installation order when you install a drive.

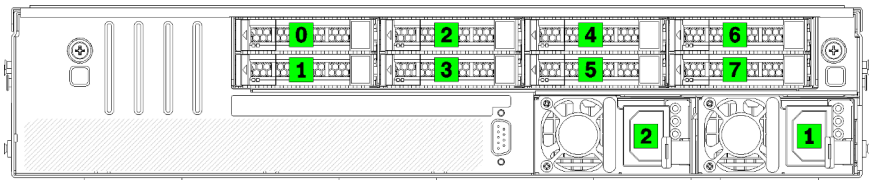

Figure 86. Numbering of hard drives and power supplies

Before installing a hot-swap drive:

1. If the drive bay has a drive filler installed, pinch the two tabs to remove the drive filler. Keep the drive filler in a safe place.
2. Touch the static-protective package that contains the new drive to any unpainted surface on the outside of the server. Then, take the new drive out of the package and place it on a static-protective surface.

To install a hot-swap drive, complete the following steps:

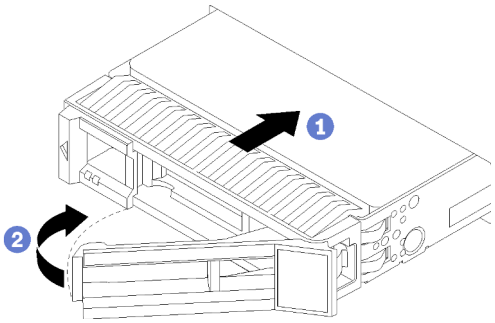

Figure 87. Installing a hard disk drive

Step 1. Ensure that the drive tray handle is in the open position. Slide the drive into the drive bay until the open drive handle catches on the edge of the drive bay.

Step 2. Close the drive tray handle to lock the drive in place.

Step 3. Check the drive status LED to verify that the drive is operating correctly.

- If the yellow drive status LED is lit continuously, that drive is faulty and must be replaced.
- If the green drive activity LED is flashing, the drive is being accessed.

Step 4. Continue to install additional hot-swap drives if necessary.

Demo video

Watch the procedure on YouTube

M.2 backplane and M.2 drive replacement

Use this information to remove and install the M.2 backplane and M.2 drive (an assembled M.2 backplane and M.2 drive also known as M.2 module).

Remove the M.2 backplane and M.2 drive

Use this information to remove the M.2 backplane and M.2 drive.

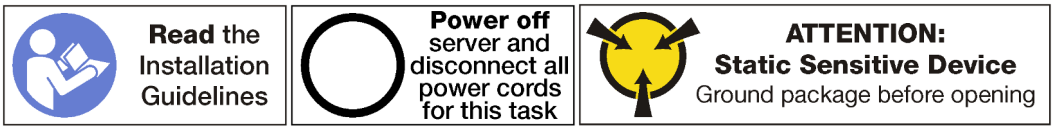

Before removing the M.2 backplane and M.2 drive:

1. Power off the server. See "Power off the server" on page 13.
2. Disconnect power cords from both power supplies, which are located in the rear of the server.
3. Record the location of the cables in the front of the PCIe adapters that are installed in the I/O expansion cage at the front of the server, and disconnect the cables.
4. Disconnect the management port cable from the management port in the I/O expansion cage, if necessary.
5. Loosen the two captive screws located on the front of the server. If necessary, use a P2 screwdriver to loosen the screws.
6. Pull the server forward until the slide rails click into place.
7. Remove the top cover. See "Remove the top cover" on page 67.
8. Remove the drive cage. See "Remove the drive cage" on page 137.

To remove the M.2 backplane and M.2 drive, complete the following steps:

Step 1. Grasp the M.2 backplane at both ends and pull it straight up to remove it from the system board.

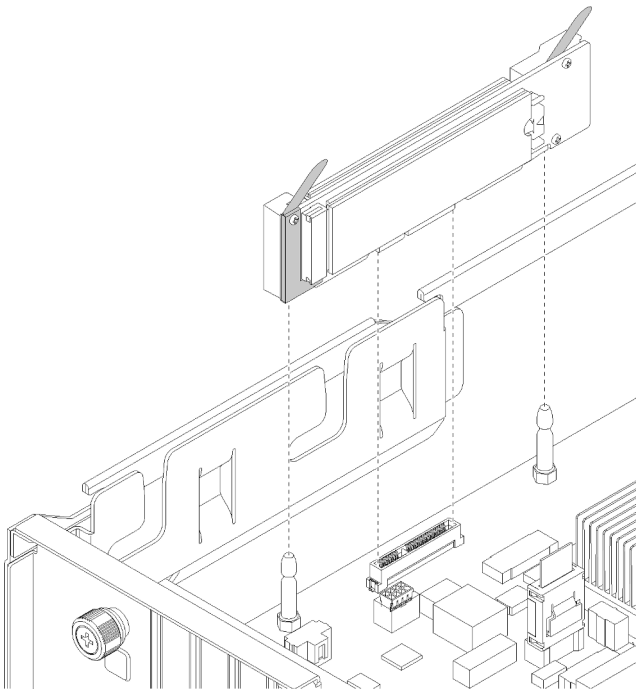

Figure 88. Removing the M.2 backplane

Step 2. Remove the M.2 drive from the M.2 backplane by doing the following:

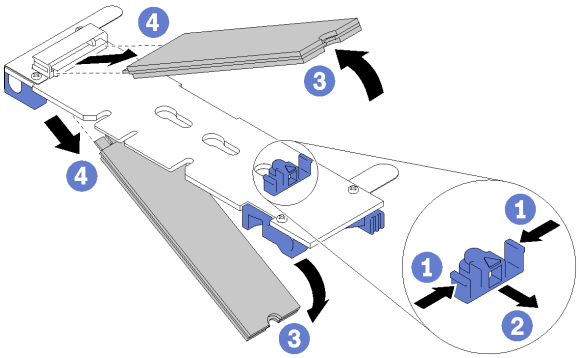

Figure 89. Removing the M.2 drive

a. Press both sides of the retainer 1.

b. Slide the retainer backward to loosen the M.2 drive from the M.2 backplane 2

Note: If the M.2 backplane has two M.2 drives, they will both release outward when you slide the retainer backward.

c. Rotate the M.2 drive away from the M.2 backplane.

d. Pull it away from the connector 2 at an angle of approximately 30 degrees.

If you are instructed to return the old M.2 backplane or M.2 drive, follow all of the packaging instructions and use any packaging materials that are provided.

Demo video

Watch the procedure on YouTube

Adjust the retainer on the M.2 backplane

Use this information to adjust the retainer on the M.2 backplane.

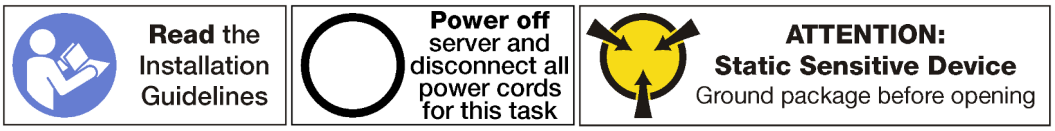

Before adjusting the retainer on the M.2 backplane, locate the correct keyhole that the retainer should be installed into to accommodate the particular length of the M.2 drive you wish to install.

To adjust the retainer on the M.2 backplane, complete the following steps:

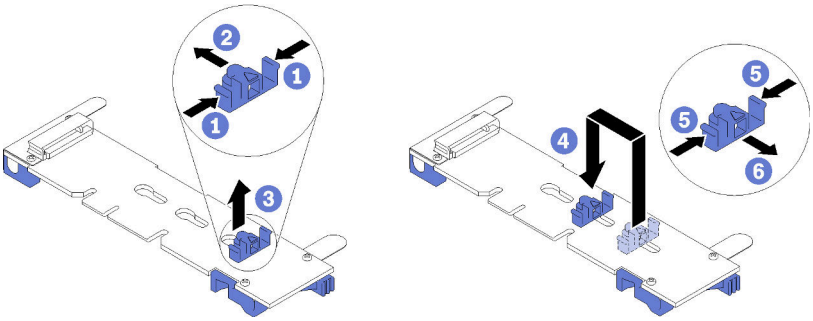

Figure 90. Adjusting the M.2 retainer

Step 1. Press both sides of the retainer **1**.

Step 2. Move the retainer forward until it is in the large opening of the keyhole.

Step 3. Take the retainer out of the keyhole.

Step 4. Insert the retainer into the correct keyhole.

Step 5. Press both sides of the retainer.

Step 6. Slide the retainer backwards until it stops at the back of the keyhole slot. seated in place.

Note: You will push the retainer slightly forward to secure the M.2 drives.

Install the M.2 backplane and M.2 drive

Use this information to install the M.2 backplane and M.2 drive.

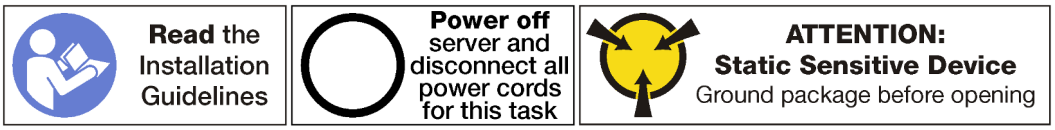

Before installing the M.2 backplane and M.2 drive:

1. Touch the static-protective package that contains the new M.2 backplane and M.2 drive to any unpainted surface on the outside of the server. Then, take the new M.2 backplane and M.2 drive out of the package and place them on a static-protective surface.
2. Adjust the retainer on the M.2 backplane to accommodate the particular size of the M.2 drive you wish to install. See "Adjust the retainer on the M.2 backplane" on page 146.

To install the M.2 backplane and M.2 drive, complete the following steps:

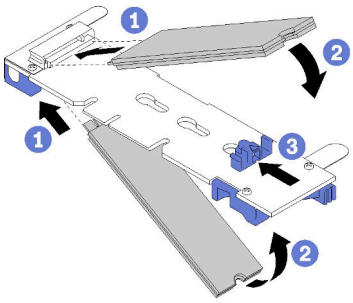

Figure 91. Installing the M.2 drive

Step 1. Insert the M.2 drive at an angle of approximately 30 degrees into the connector.

Note: When only one drive is installed, it must be installed in slot 0.

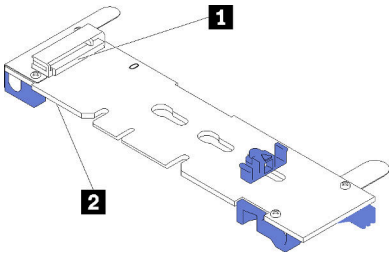

Figure 92. M.2 drive slots

Table 19. M.2 drive slots

1 Slot 0	**2 Slot 1**

Step 2. Rotate the M.2 drive down until the notch catches on the lip of the retainer .

Step 3. Slide the retainer forward (toward the connector) to secure the M.2 drive or drives into place.

Attention: When sliding the retainer forward, ensure that the two nubs on the retainer enter the small holes on the M.2 backplane. Once they enter the holes, you will hear a soft “click” sound.

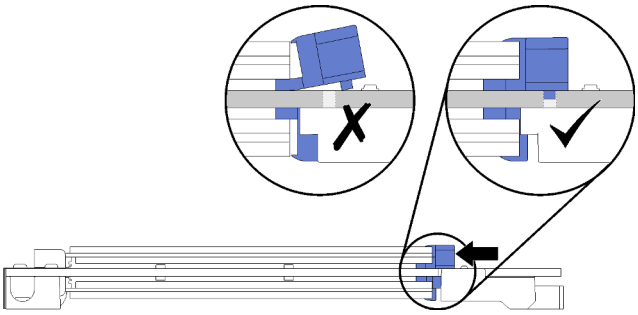

Figure 93. Sliding the retainer

Step 4. Align the blue plastic supports at each end of the M.2 backplane with the guide pins on the system board. Then, insert the M.2 backplane into the M.2 slot on the system board and press it down to fully seat it.

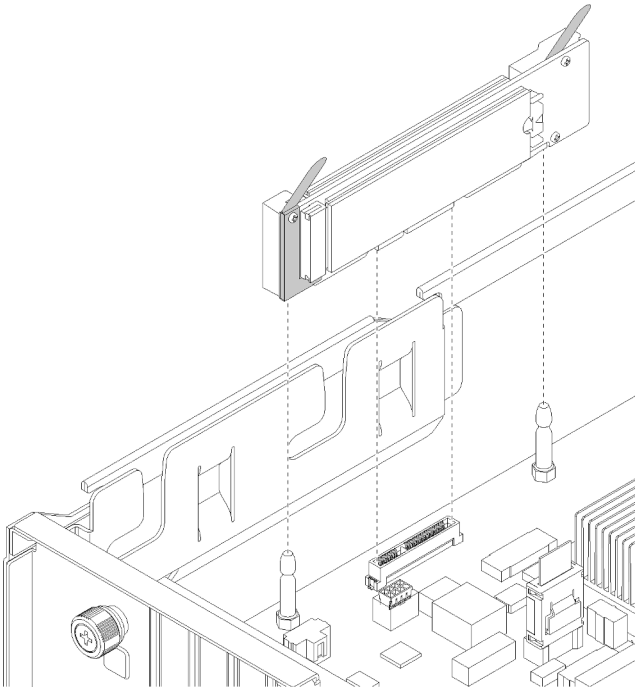

Figure 94. Installing the M.2 backplane

After installing the M.2 drive and M.2 backplane:

1. Install the drive cage. See “Install the drive cage” on page 138.
2. Install the top cover. See “Install the top cover” on page 69.
3. Push up on the latches on the slide rails and push the server back into the rack.
4. Tighten the two captive screws located on the front of the server to secure the server in the rack.

   Note: Always secure the system in the rack if your are moving the rack.
5. Connect all cables to the ports on the front of the server, including the management port, if necessary, and all PCIe adapter ports. The management port and PCIe adapter ports are located in the I/O expansion cage.
6. Connect power cords to both power supplies, which are located at the rear of the server.

Demo video

Watch the procedure on YouTube

CMOS battery replacement

Use this information to remove and install the CMOS battery.

Remove the system battery (CR2032)

Use this information to remove the system battery.

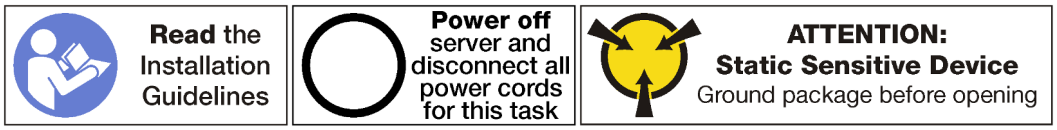

S004

CAUTION:
When replacing the lithium battery, use only Lenovo specified part number or an equivalent type battery recommended by the manufacturer. If your system has a module containing a lithium battery, replace it only with the same module type made by the same manufacturer. The battery contains lithium and can explode if not properly used, handled, or disposed of.

Do not:

- **Throw or immerse into water**
- **Heat to more than 100°C (212°F)**
- **Repair or disassemble**

Dispose of the battery as required by local ordinances or regulations.

S002

CAUTION:
The power-control button on the device and the power switch on the power supply do not turn off the electrical current supplied to the device. The device also might have more than one power cord. To remove all electrical current from the device, ensure that all power cords are disconnected from the power source.

Consider the following when replacing the system battery:

- Lenovo has designed this product with your safety in mind. The lithium system battery must be handled correctly to avoid possible danger. If you replace the system battery, you must adhere to the following instructions.
- If you replace the original lithium battery with a heavy-metal battery or a battery with heavy-metal components, be aware of the following environmental consideration. Batteries and accumulators that contain heavy metals must not be disposed of with normal domestic waste. They will be taken back free of charge by the manufacturer, distributor, or representative, to be recycled or disposed of in a proper manner.
- After you replace the system battery, you must reconfigure the server and reset the system date and time.

Before removing the system battery:

1. Power off the server. See "Power off the server" on page 13.
2. Disconnect power cords from both power supplies, which are located in the rear of the server.
3. Record the location of the cables in the front of the PCIe adapters that are installed in the I/O expansion cage at the front of the server, and disconnect the cables.
4. Disconnect the management port cable from the management port in the I/O expansion cage, if necessary.
5. Loosen the two captive screws located on the front of the server. If necessary, use a P2 screwdriver to loosen the screws.
6. Pull the server forward until the slide rails click into place.
7. Remove the top cover. See "Remove the top cover" on page 67.
8. Remove the drive cage. See "Remove the drive cage" on page 137.

To remove the system battery, complete the following steps:

Step 1. Locate the system battery. See "System board components" on page 22.

Step 2. Gently push the top of the battery away from the battery retainer clips to disengage the battery.

Step 3. Lift the battery from the retainer using your fingers.

Attention:

- Failing to remove the system battery properly might damage the socket on the system board. Any damage to the socket might require replacing the system board.
- Do not tilt or push the system battery by using excessive force.

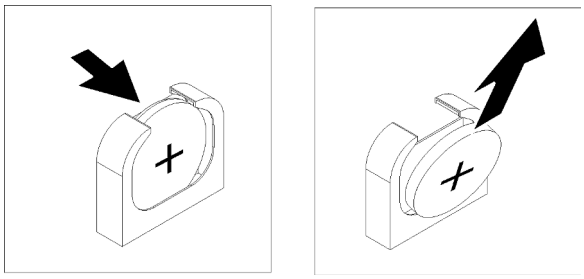

Figure 95. Removing the system battery

After removing the system battery:

1. Install a new system battery. See "Install the system battery (CR2032)" on page 151.
2. Dispose of the system battery as required by local ordinances or regulations.

Demo video

Watch the procedure on YouTube

Install the system battery (CR2032)

Use this information to install the system battery.

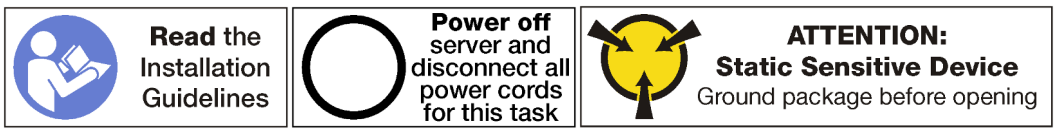

S004

CAUTION:
When replacing the lithium battery, use only Lenovo specified part number or an equivalent type battery recommended by the manufacturer. If your system has a module containing a lithium battery, replace it only with the same module type made by the same manufacturer. The battery contains lithium and can explode if not properly used, handled, or disposed of.

Do not:

- **Throw or immerse into water**
- **Heat to more than 100°C (212°F)**
- **Repair or disassemble**

Dispose of the battery as required by local ordinances or regulations.

S002

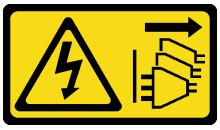

CAUTION:
The power-control button on the device and the power switch on the power supply do not turn off the electrical current supplied to the device. The device also might have more than one power cord. To remove all electrical current from the device, ensure that all power cords are disconnected from the power source.

Consider the following when replacing the system battery:

- Lenovo has designed this product with your safety in mind. The lithium system battery must be handled correctly to avoid possible danger. If you replace the system battery, you must adhere to the following instructions.
- If you replace the original lithium battery with a heavy-metal battery or a battery with heavy-metal components, be aware of the following environmental consideration. Batteries and accumulators that contain heavy metals must not be disposed of with normal domestic waste. They will be taken back free of charge by the manufacturer, distributor, or representative, to be recycled or disposed of in a proper manner.
- After you replace the system battery, you must reconfigure the server and reset the system date and time.

To install the system battery, complete the following steps:

Step 1. Touch the static-protective package that contains the new system battery to any unpainted surface on the outside of the server. Then, take the new system battery out of the package and place it on a static-protective surface.

Step 2. Install the new system battery as shown. Ensure that the system battery socket holds the battery securely.

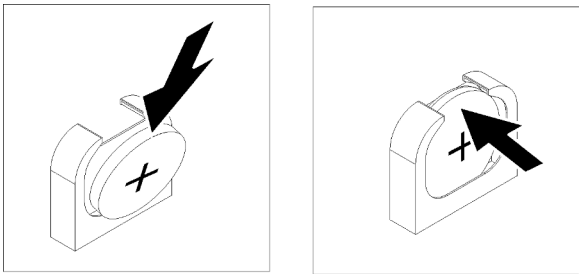

Figure 96. Installing the system battery

After installing the system battery:

1. Install the drive cage. See “Install the drive cage” on page 138.
2. Install the air baffle. See “Install the air baffle” on page 72.
3. Install the top cover. See “Install the top cover” on page 69.
4. Push up on the latches on the slide rails and push the server back into the rack.
5. Tighten the two captive screws located on the front of the server to secure the server in the rack.

   Note: Always secure the system in the rack if your are moving the rack.
6. Connect all cables to the ports on the front of the server, including the management port, if necessary, and all PCIe adapter ports. The management port and PCIe adapter ports are located in the I/O expansion cage.
7. Connect power cords to both power supplies, which are located at the rear of the server.
8. Use F1 Setup to set the date, time, and any passwords.

Demo video

Watch the procedure on YouTube

Serial port replacement

Use this information to remove and install the serial port.

Remove the serial port

Use this information to remove the serial port.

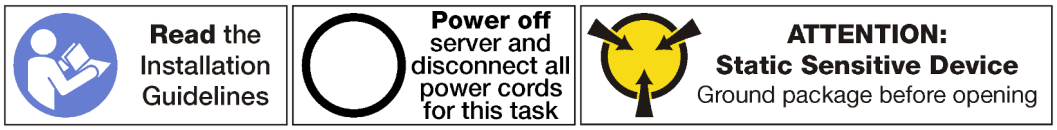

To remove the serial port, complete the following steps:

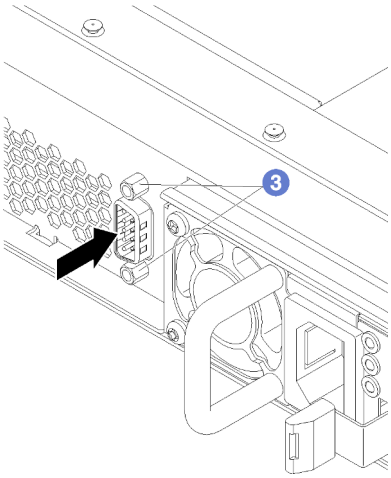

Figure 97. Removing the serial port

Step 1. Power off the server. See “Power off the server” on page 13.

Step 2. Disconnect power cords from both power supplies, which are located in the rear of the server.

Step 3. Remove the serial port retention screws on the rear of the server.

Step 4. Record the location of the cables in the front of the PCIe adapters that are installed in the I/O expansion cage at the front of the server, and disconnect the cables.

Step 5. Disconnect the management port cable from the management port in the I/O expansion cage, if necessary.

Step 6. Loosen the two captive screws located on the front of the server. If necessary, use a P2 screwdriver to loosen the screws.

Step 7. Pull the server forward until the slide rails click into place.

Step 8. Remove the top cover. See "Remove the top cover" on page 67.

Step 9. Remove the drive cage. See "Remove the drive cage" on page 137.

Step 10. Disconnect the cable of the serial port from the connector 1 on the system board.

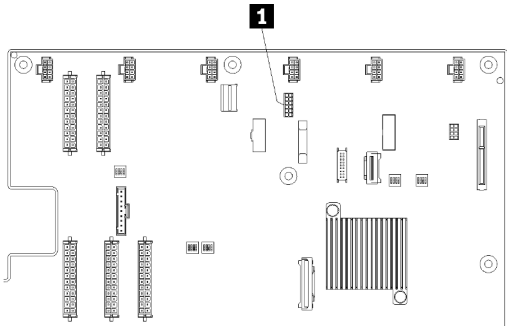

Figure 98. Serial port cable connector on the system board

After removing the serial port, install a new serial port.

Install the serial port

Use this information to install the serial port.

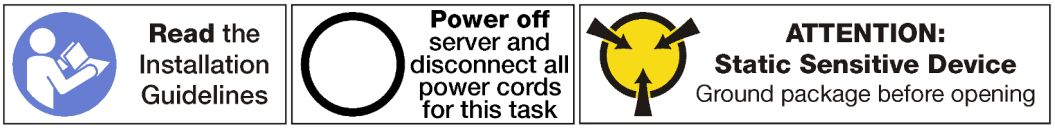

Before installing the serial port:

1. Touch the static-protective package that contains the new serial port to any unpainted surface on the outside of the server. Then, take the new serial port out of the package and place it on a static-protective surface.

To install the serial port, complete the following steps:

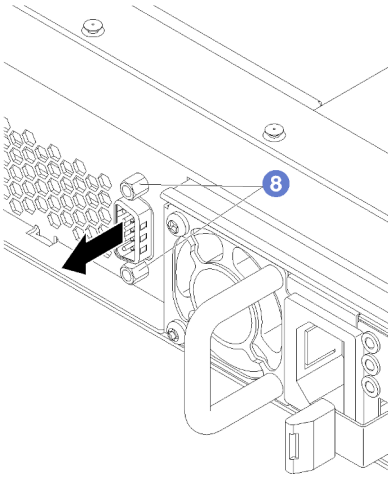

Figure 99. Installing the serial port

Step 1. Slide the serial port into the serial port hole in the chassis from inside of the server chassis.

Step 2. Connect the cable of the serial port to the connector **1** on the system board.

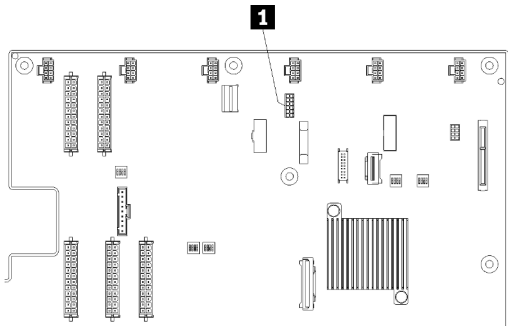

Figure 100. Serial port cable connector on the system board

Step 3. Install the drive cage. See "Install the drive cage" on page 138.

Step 4. Install the top cover. See "Install the top cover" on page 69.

Step 5. Push up on the latches on the slide rails and push the server back into the rack.

Step 6. Tighten the two captive screws located on the front of the server to secure the server in the rack.

Note: Always secure the system in the rack if your are moving the rack.

Step 7. Connect all cables to the ports on the front of the server, including the management port, if necessary, and all PCIe adapter ports. The management port and PCIe adapter ports are located in the I/O expansion cage.

Step 8. Install the serial port screws to secure the serial port to the chassis.

Step 9. Connect power cords to both power supplies, which are located at the rear of the server.

To enable the serial port:

- For Linux operating system:

  Open the ipmitool and enter the following command to disable the Serial over LAN (SOL) feature:

  `ipmitool -I lanplus -H IP -U USERID -P PASSW0RD sol deactivate`

  where:

  IP
  The IP address of the XCC.

  USERID **and** *PASSW0RD*
  Credentials to access the XCC.

- For Microsoft Windows operating system:
  1. Open the ipmitool and enter the following command to disable the SOL feature:

     `ipmitool -I lanplus -H IP -U USERID -P PASSW0RD sol deactivate`

     IP
     The IP address of the XCC.

     USERID **and** *PASSW0RD*
     Credentials to access the XCC.
  2. Open Windows PowerShell and enter the following command to disable Emergency Management Services (EMS):

     `bcdedit /ems no`
  3. Restart the server to ensure that the EMS setting takes effect.

Hot-swap power supply replacement

Use this information to remove and install a hot-swap power supply.

Remove a hot-swap power supply

Use this information to remove a hot-swap power supply.

S035

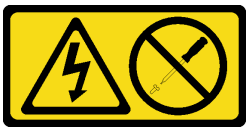

CAUTION:
Never remove the cover on a power supply or any part that has this label attached. Hazardous voltage, current, and energy levels are present inside any component that has this label attached. There are no serviceable parts inside these components. If you suspect a problem with one of these parts, contact a service technician.

S002

CAUTION:
The power-control button on the device and the power switch on the power supply do not turn off the electrical current supplied to the device. The device also might have more than one power cord. To remove all electrical current from the device, ensure that all power cords are disconnected from the power source.

S001

DANGER

Electrical current from power, telephone, and communication cables is hazardous.
To avoid a shock hazard:

- **Connect all power cords to a properly wired and grounded electrical outlet/source.**
- **Connect any equipment that will be attached to this product to properly wired outlets/sources.**
- **When possible, use one hand only to connect or disconnect signal cables.**
- **Never turn on any equipment when there is evidence of fire, water, or structural damage.**
- **The device might have more than one power cord, to remove all electrical current from the device, ensure that all power cords are disconnected from the power source.**

Figure 101. Hot-swap power supply label on the cover

Attention: This type of power supply is hot-swap only when two power supplies are installed for redundancy. If only one power supply is installed, you must power off the server first before removing the power supply.

The following tips describe the information that you must consider when you remove a power supply with dc input.

CAUTION:
240 V dc input (input range: 180-300 V dc) is supported in Chinese Mainland ONLY. Power supply with 240 V dc input cannot support hot plugging power cord function. Before removing the power supply with dc input, please turn off server or disconnect dc power sources at the breaker panel or by turning off the power source. Then, remove the power cord.

在直流输入状态下，若电源供应器插座不支持热插拔功能，请务必不要对设备电源线进行热插拔，此操作可能导致设备损坏及数据丢失。因错误执行热插拔导致的设备故障或损坏，不属于保修范围。

NEVER CONNECT AND DISCONNECT THE POWER SUPPLY CABLE AND EQUIPMENT WHILE YOUR EQUIPMENT IS POWERED ON WITH DC SUPPLY (hot-plugging). Otherwise you may damage the equipment and result in data loss, the damages and losses result from incorrect operation of the equipment will not be covered by the manufacturers' warranty.

S035

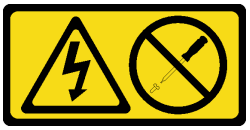

CAUTION:
Never remove the cover on a power supply or any part that has this label attached. Hazardous voltage, current, and energy levels are present inside any component that has this label attached. There are no serviceable parts inside these components. If you suspect a problem with one of these parts, contact a service technician.

S019

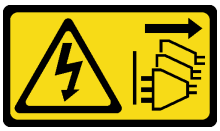

CAUTION:
The power-control button on the device does not turn off the electrical current supplied to the device. The device also might have more than one connection to dc power. To remove all electrical current from the device, ensure that all connections to dc power are disconnected at the dc power input terminals.

S029

DANGER

For -48V dc power supply, electrical current from power cords is hazardous.
To avoid a shock hazard:

- **To connect or disconnect -48V dc power cords when you need to remove/replace install redundancy power supply unit(s).**

To Connect:	To Disconnect:
1. Turn OFF subject dc power source(s) and equipment (s) that are attached to this product. 2. Install the power supply unit(s) into the system housing. 3. Attach dc power cord(s) to the product. • Ensure correct polarity of -48 V dc connections: RTN is + and -48 V dc is -. Earth ground should be connected very well. 4. Connect dc power cord(s) to subject power source (s). 5. Turn ON all the power source(s).	1. Disconnect or turn off the subject dc power source(s) (at the breaker panel) before removing the power supply unit(s). 2. Remove the subject dc cord(s) and make sure the wire terminal of power cord(s) is insulated. 3. Unplug the subject power supply unit(s) from the system housing.

To remove a hot-swap power supply, complete the following steps:

Step 1. Disconnect the power cord from the hot-swap power supply.

Note: If you are replacing two power supplies, replace them one by one to ensure that the power supply to the server is not interrupted. Do not disconnect the power cord from the second power supply until the power output LED for the first power supply is lit. For the location of the power output LED, refer to "Power Supply LEDs" on page 21.

Step 2. Press the release tab toward the handle, and carefully pull the handle at the same time to slide the hot-swap power supply out of the chassis.

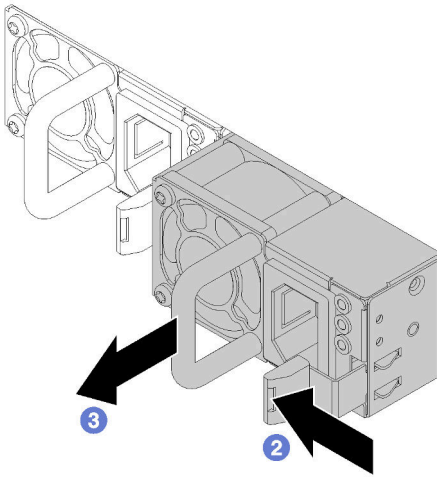

Figure 102. Removing a hot-swap power supply

After removing the hot-swap power supply:

1. Install a new power supply. See "Install a hot-swap power supply" on page 160.

   Important: To ensure proper cooling during normal server operation, both of the power supply bays must be occupied. This means that each bay must have a power supply installed.

2. If you are instructed to return the old hot-swap power supply, follow all packaging instructions and use any packaging materials that are provided.

Demo video

Watch the procedure on YouTube

Install a hot-swap power supply

Use this information to install a hot-swap power supply.

Make sure that the two power supplies install in the server have the same wattage.

Figure 103. Hot-swap power supply label on the cover

S035

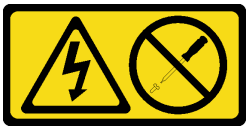

CAUTION:
Never remove the cover on a power supply or any part that has this label attached. Hazardous voltage, current, and energy levels are present inside any component that has this label attached. There are no serviceable parts inside these components. If you suspect a problem with one of these parts, contact a service technician.

S002

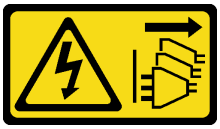

CAUTION:
The power-control button on the device and the power switch on the power supply do not turn off the electrical current supplied to the device. The device also might have more than one power cord. To remove all electrical current from the device, ensure that all power cords are disconnected from the power source.

S001

DANGER

Electrical current from power, telephone, and communication cables is hazardous.
To avoid a shock hazard:

- **Connect all power cords to a properly wired and grounded electrical outlet/source.**
- **Connect any equipment that will be attached to this product to properly wired outlets/sources.**
- **When possible, use one hand only to connect or disconnect signal cables.**
- **Never turn on any equipment when there is evidence of fire, water, or structural damage.**
- **The device might have more than one power cord, to remove all electrical current from the device, ensure that all power cords are disconnected from the power source.**

The following tips describe the information that you must consider when you install a power supply with dc input.

CAUTION:
240 V dc input (input range: 180-300 V dc) is supported in Chinese Mainland ONLY. Power supply with 240 V dc input cannot support hot plugging power cord function. Before removing the power supply with dc input, please turn off server or disconnect dc power sources at the breaker panel or by turning off the power source. Then, remove the power cord.

在直流输入状态下，若电源供应器插座不支持热插拔功能，请务必不要对设备电源线进行热插拔，此操作可能导致设备损坏及数据丢失。因错误执行热插拔导致的设备故障或损坏，不属于保修范围。

NEVER CONNECT AND DISCONNECT THE POWER SUPPLY CABLE AND EQUIPMENT WHILE YOUR EQUIPMENT IS POWERED ON WITH DC SUPPLY (hot-plugging). Otherwise you may damage the equipment and result in data loss, the damages and losses result from incorrect operation of the equipment will not be covered by the manufacturers' warranty.

S035

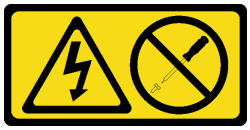

CAUTION:
Never remove the cover on a power supply or any part that has this label attached. Hazardous voltage, current, and energy levels are present inside any component that has this label attached. There are no serviceable parts inside these components. If you suspect a problem with one of these parts, contact a service technician.

S019

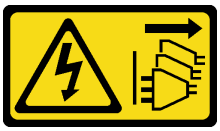

CAUTION:
The power-control button on the device does not turn off the electrical current supplied to the device. The device also might have more than one connection to dc power. To remove all electrical current from the device, ensure that all connections to dc power are disconnected at the dc power input terminals.

S029

DANGER

For -48V dc power supply, electrical current from power cords is hazardous.
To avoid a shock hazard:

- **To connect or disconnect -48V dc power cords when you need to remove/replace install redundancy power supply unit(s).**

To Connect:

1. Turn OFF subject dc power source(s) and equipment (s) that are attached to this product.
2. Install the power supply unit(s) into the system housing.
3. Attach dc power cord(s) to the product.
   - Ensure correct polarity of -48 V dc connections: RTN is + and -48 V dc is -. Earth ground should be connected very well.
4. Connect dc power cord(s) to subject power source (s).
5. Turn ON all the power source(s).

To Disconnect:

1. Disconnect or turn off the subject dc power source(s) (at the breaker panel) before removing the power supply unit(s).
2. Remove the subject dc cord(s) and make sure the wire terminal of power cord(s) is insulated.
3. Unplug the subject power supply unit(s) from the system housing.

Before installing a hot-swap power supply, touch the static-protective package that contains the new hot-swap power supply to any unpainted surface on the outside of the server. Then, take the new hot-swap power supply out of the package and place it on a static-protective surface.

To install a hot-swap power supply, slide the new hot-swap power supply into the bay until it snaps into position.

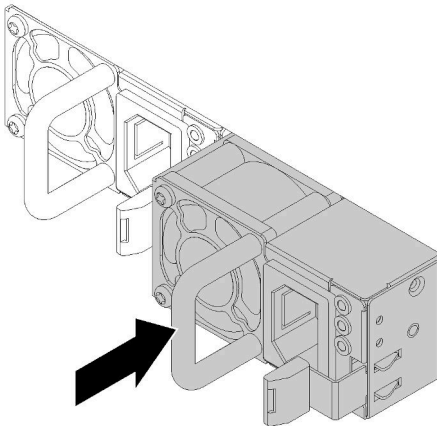

Figure 104. Installing a hot-swap power supply

After installing the hot-swap power supply:

1. Connect one end of the power cord to the new power supply connector; then, connect the other end of the power cord into a properly grounded electrical outlet.
2. Make sure that both the power input LED and the power output LED on the power supply are lit, indicating that the power supply is operating properly.

Demo video

Watch the procedure on YouTube

TPM card replacement (for Chinese Mainland only)

Use this information to remove and install the TPM card (sometimes called a daughter card).

For customers in Chinese Mainland, integrated TPM is not supported. However, customers in Chinese Mainland can install a Trusted Cryptographic Module (TCM) adapter or a TPM adapter (sometimes called a daughter card).

Remove the TPM card (for Chinese Mainland only)

Use this information to remove the TPM card.

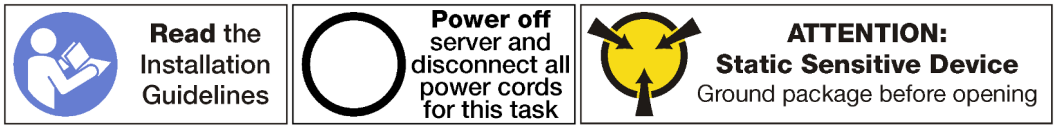

Before removing a TPM card:

1. Power off the server. See “Power off the server” on page 13.
2. Disconnect power cords from both power supplies, which are located in the rear of the server.
3. Record the location of the cables in the front of the PCIe adapters that are installed in the I/O expansion cage at the front of the server, and disconnect the cables.
4. Disconnect the management port cable from the management port in the I/O expansion cage, if necessary.
5. Loosen the two captive screws located on the front of the server. If necessary, use a P2 screwdriver to loosen the screws.
6. Pull the server forward until the slide rails click into place.
7. Remove the top cover. See “Remove the top cover” on page 67.
8. Remove the drive cage to get access to the TPM connector, which is located on the system board. See “Remove the drive cage” on page 137.

To remove the TPM card, complete the following steps:

Step 1. Press and hold the release latch.

Step 2. Lift the TPM card straight up.

Notes:

- Carefully handle the TPM card by its edges.
- Your TPM card might look slightly different from the illustration.

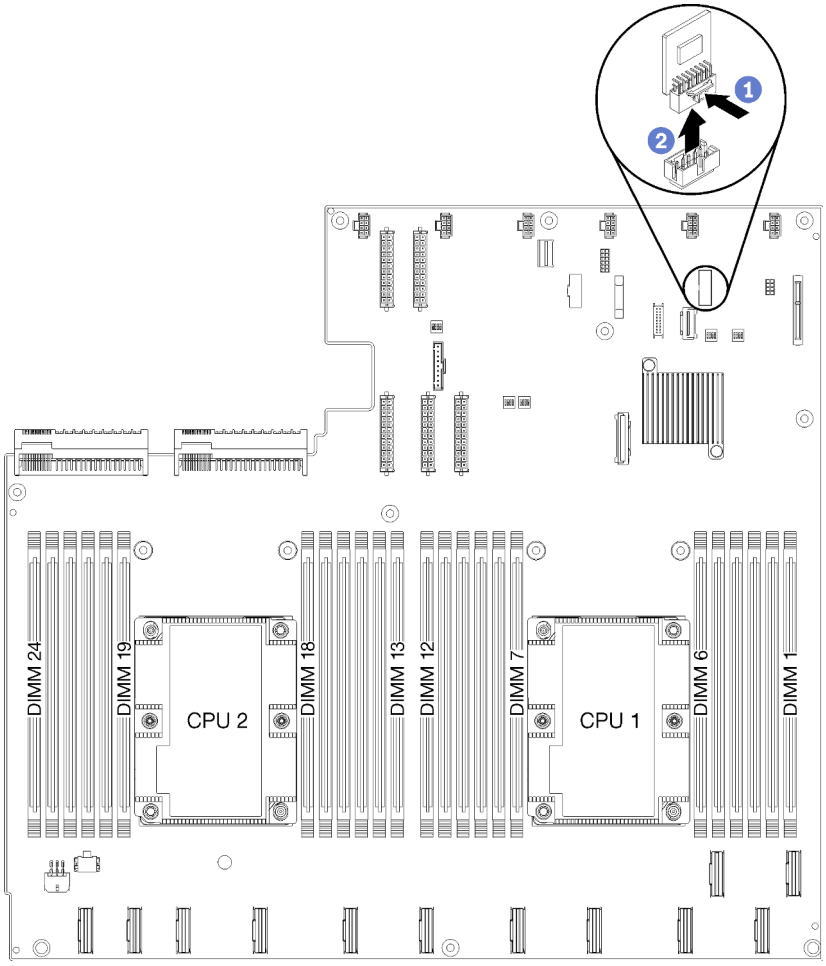

Figure 105. Removing the TPM card

If you are instructed to return the old TPM card, follow all packaging instructions and use any packaging materials that are provided.

Install the TPM card (for Chinese Mainland only)

Use this information to install the TPM card.

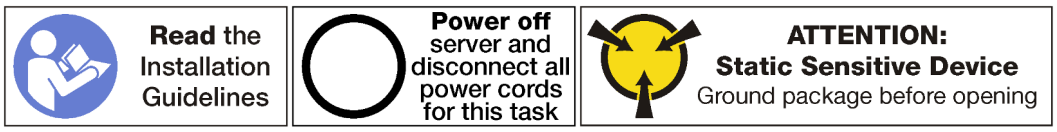

Before installing the TPM card, touch the static-protective package that contains the new TPM card to any unpainted surface on the outside of the server. Then, take the new TPM card out of the package and place it on a static-protective surface.

The TPM card is located on the system board under the drive cage. To install the TPM card, complete the following steps:

Step 1. Insert the TPM card into the TPM connector on the system board.

Notes:

- Carefully handle the TPM card by its edges.
- Your TPM card might look slightly different from the illustration.

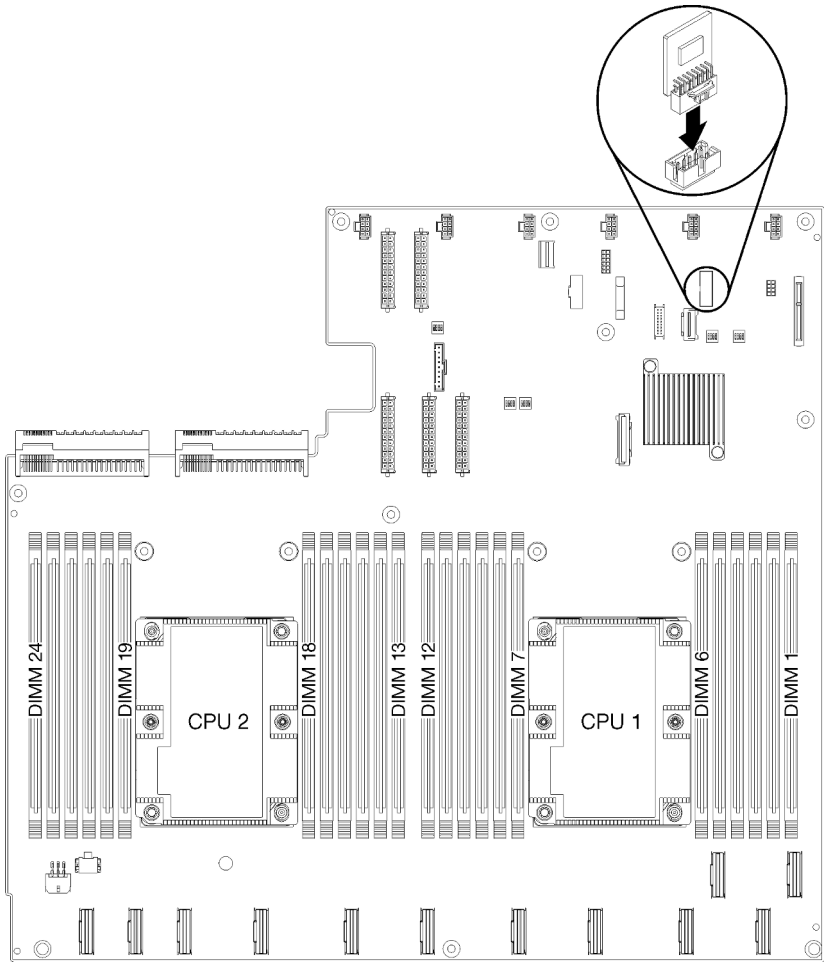

Figure 106. Installing the TPM card

After installing the TPM card:

1. Install the drive cage. See Install the drive cage.
2. Install the top cover. See "Install the top cover" on page 69.
3. Push up on the latches on the slide rails and push the server back into the rack.
4. Tighten the two captive screws located on the front of the server to secure the server in the rack.

   Note: Always secure the system in the rack if your are moving the rack.
5. Connect all cables to the ports on the front of the server, including the management port, if necessary, and all PCIe adapter ports. The management port and PCIe adapter ports are located in the I/O expansion cage.
6. Connect power cords to both power supplies, which are located at the rear of the server.

Rack latch replacement

Use this information to remove and install the rack latches.

Remove a rack mounting bracket

Use this information to remove a rack mounting bracket.

Before removing a rack mounting bracket, complete the following steps:

1. Power off the server. See "Power off the server" on page 13.
2. Disconnect power cords from both power supplies, which are located in the rear of the server.
3. Record the location of the cables in the front of the PCIe adapters that are installed in the I/O expansion cage at the front of the server, and disconnect the cables.
4. Disconnect the management port cable from the management port in the I/O expansion cage, if necessary.
5. Loosen the two captive screws located on the front of the server. If necessary, use a P2 screwdriver to loosen the screws.
6. Pull the server forward until the slide rails click into place.

To remove a rack mounting bracket, complete the following steps:

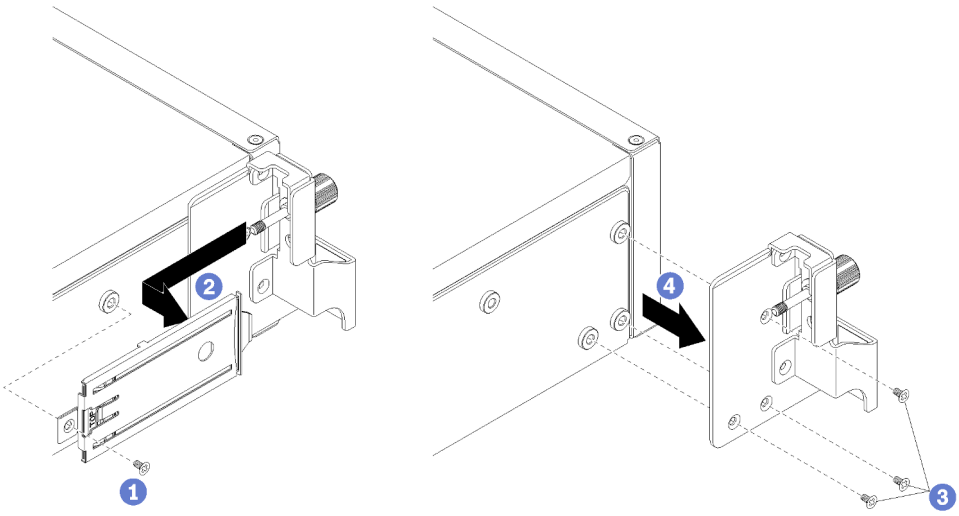

Figure 107. Removing a rack mounting bracket

Step 1. Remove the screw that attaches the pullout tab tray to the server chassis.

Step 2. From the front of the server, push the pullout tab toward the rear of the server to remove the pullout tab tray.

Step 3. Remove the three screws that secure the rack mounting bracket to the server chassis.

Step 4. Pull the rack mounting bracket away from the server chassis.

If you are instructed to return the old rack mounting bracket, follow all packaging instructions and use any packaging materials that are provided.

Demo video

Watch the procedure on YouTube

Install a rack mounting bracket

Use this information to install a rack mounting bracket.

To install a rack mounting bracket, complete the following steps:

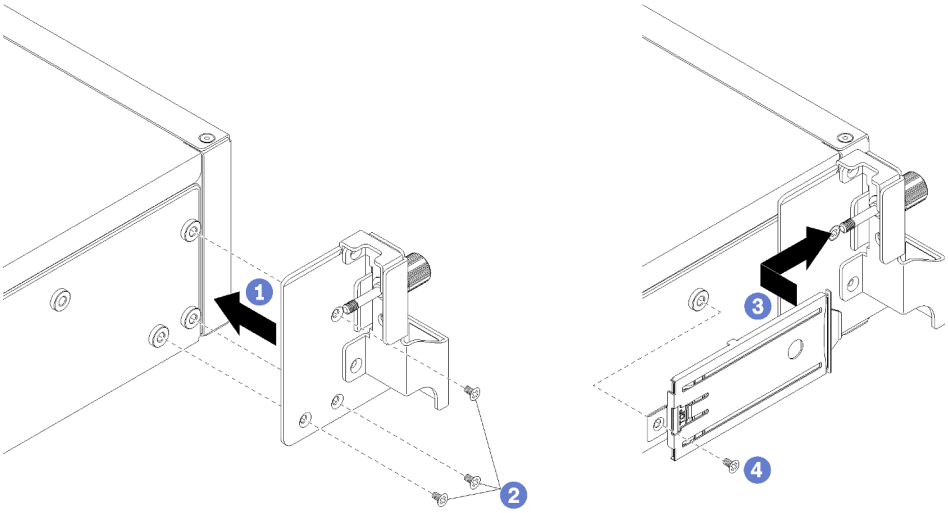

Figure 108. Installing a rack mounting bracket

Step 1. Align the holes in the rack mounting bracket with the corresponding holes in the server.

Step 2. Install the three screws to secure the rack mounting bracket to the server chassis.

Step 3. Slide the pullout tab tray into the opening of the rack mounting bracket, aligning the screw with the hole in the server chassis.

Step 4. Install the screw to secure the pullout tab tray to the server chassis.

After installing a rack mounting bracket, complete the following steps:

1. Push up on the latches on the slide rails and push the server back into the rack.
2. Tighten the two captive screws located on the front of the server to secure the server in the rack.

   Note: Always secure the system in the rack if your are moving the rack.
3. Connect all cables to the ports on the front of the server, including the management port, if necessary, and all PCIe adapter ports. The management port and PCIe adapter ports are located in the I/O expansion cage.
4. Connect power cords to both power supplies, which are located at the rear of the server.

Demo video

Watch the procedure on YouTube

Processor and heat sink replacement

Use the following procedures to replace an assembled processor and heat sink, known as a processor-heat-sink module (PHM), a processor, or a heat sink.

Attention: Before you begin replacing a processor, make sure that you have an alcohol cleaning pad (part number 00MP352) and gray thermal grease (part number 41Y9292).

Important: The processor in your server can throttle, temporarily lowering speed to reduce heat output, in response to thermal conditions. In instances where the throttling period is of extremely short duration (100 ms or less), the only indication will be an entry in the event log. In these instances the event can be ignored and processor replacement is not required.

Remove a processor and heat sink

This task has instructions for removing an assembled processor and heat sink, known as a processor-heat-sink module (PHM), a processor, and a heat sink. All of these tasks require a Torx T30 driver.

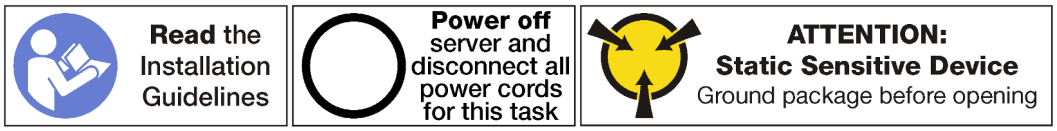

Attention:

- Each processor socket must always contain a cover or a PHM. When removing or installing a PHM, protect empty processor sockets with a cover.
- Do not touch the processor socket or processor contacts. Processor-socket contacts are very fragile and easily damaged. Contaminants on the processor contacts, such as oil from your skin, can cause connection failures.
- Remove and install only one PHM at a time. If the system board supports multiple processors, install the PHMs starting with the first processor socket.
- Do not allow the thermal grease on the processor or heat sink to come in contact with anything. Contact with any surface can compromise the thermal grease, rendering it ineffective. Thermal grease can damage components, such as electrical connectors in the processor socket. Do not remove the grease cover from a heat sink until you are instructed to do so.
- To ensure the best performance, check the manufacturing date on the new heat sink and make sure it does not exceed 2 years. Otherwise, wipe off the existing thermal grease and apply the new grease onto it for optimal thermal performance.

Before removing a PHM:

Note: The heat sink, processor, and processor retainer for your system might be different than those shown in the illustrations.

1. Power off the server. See "Power off the server" on page 13.
2. Disconnect power cords from both power supplies, which are located in the rear of the server.
3. Record the location of the cables in the front of the PCIe adapters that are installed in the I/O expansion cage at the front of the server, and disconnect the cables.

4. Disconnect the management port cable from the management port in the I/O expansion cage, if necessary.
5. Loosen the two captive screws located on the front of the server. If necessary, use a P2 screwdriver to loosen the screws.
6. Remove the top cover. See “Remove the top cover” on page 67.
7. Remove the air baffle. See “Remove the air baffle” on page 71.

To remove a PHM, complete the following steps:

Step 1. Remove the PHM from the system board.

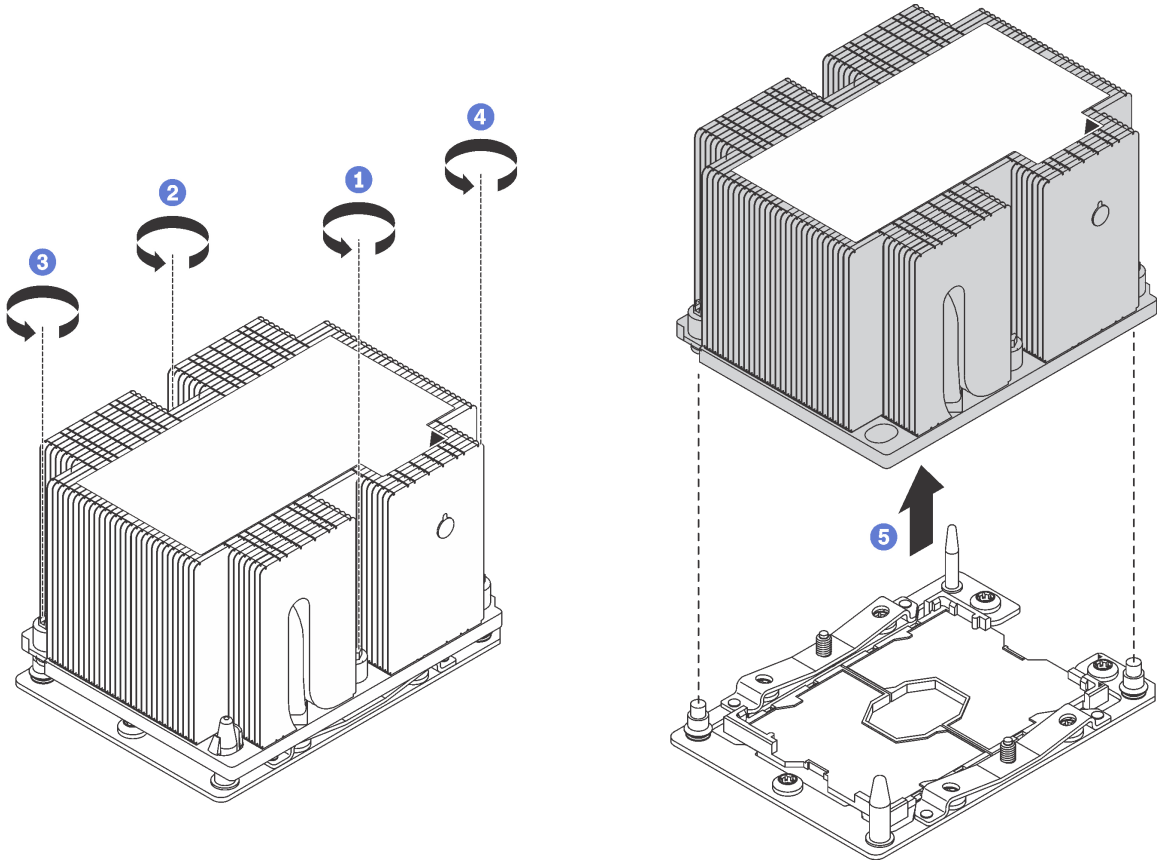

Figure 109. Removing a PHM

Attention: To prevent damage to components, make sure that you follow the indicated loosening sequence.

a. Fully loosen the Torx T30 captive fasteners on the processor-heat-sink module *in the removal sequence shown* on the heat-sink label.
b. Lift the processor-heat-sink module from the processor socket.

After removing a PHM:

- If you are removing the PHM as part of a system board replacement, set the PHM aside.

- If you are replacing the processor or heat sink, separate the processor and its retainer from the heat sink.

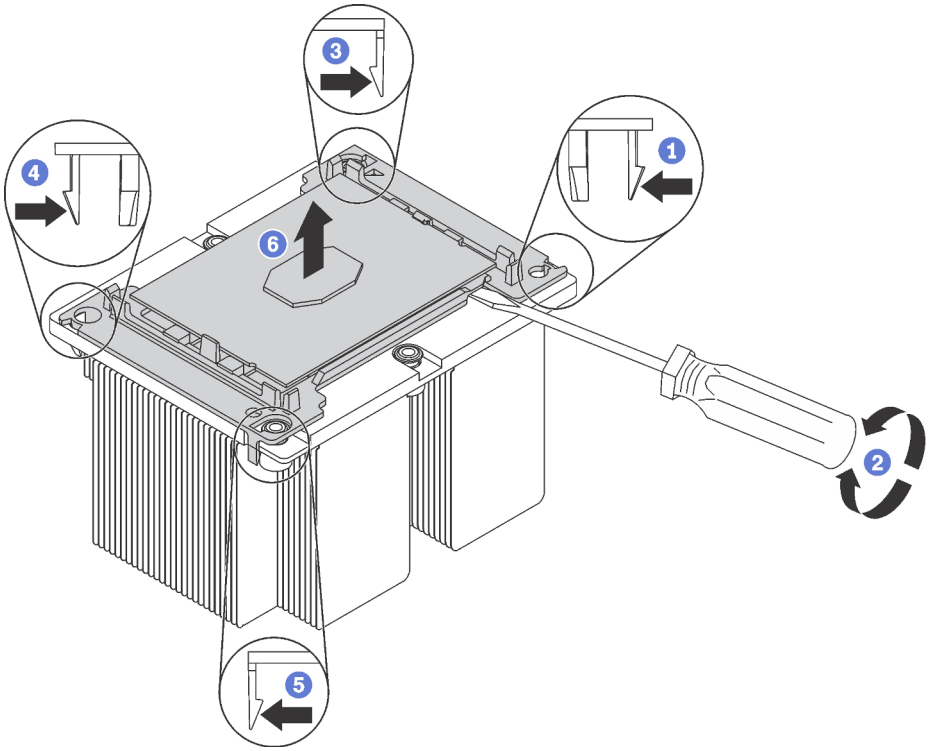

Figure 110. Separating a heat sink from a processor

1. Press the retaining clip at the corner of the processor retainer closest to the pry point.
2. Gently pry this corner of the retainer away from the heat sink with a flat-bladed screwdriver, using a twisting motion to break the processor-to-heat-sink seal.
3. Release the remaining retaining clips and lift the processor and retainer from the heat sink.
4. After separating the processor and retainer from the heat sink, hold the processor and retainer with the thermal-grease side down and the processor-contact side up to prevent the processor from falling out of the retainer.

   Note: The processor retainer will be removed and discarded in a later step and replaced with a new one.

- If you are replacing the processor, you will be reusing the heat sink. Wipe the thermal grease from the bottom of the heat sink using an alcohol cleaning pad.
- If you are replacing the heat sink, you will be reusing the processor. Wipe the thermal grease from the top of the processor using an alcohol cleaning pad.

If you are instructed to return the old processor or heat sink, follow all packaging instructions and use any packaging materials that are provided.

Demo video

Watch the procedure on YouTube

Install a processor and heat sink

This task has instructions for installing an assembled processor and heat sink, known as a processor-heat-sink module (PHM), a processor, and a heat sink. All of these tasks require a Torx T30 driver.

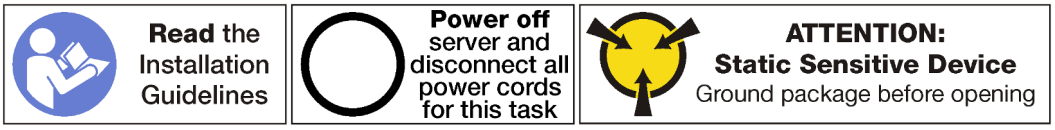

Attention:

- Each processor socket must always contain a cover or a PHM. When removing or installing a PHM, protect empty processor sockets with a cover.
- Do not touch the processor socket or processor contacts. Processor-socket contacts are very fragile and easily damaged. Contaminants on the processor contacts, such as oil from your skin, can cause connection failures.
- Remove and install only one PHM at a time. If the system board supports multiple processors, install the PHMs starting with the first processor socket.
- Do not allow the thermal grease on the processor or heat sink to come in contact with anything. Contact with any surface can compromise the thermal grease, rendering it ineffective. Thermal grease can damage components, such as electrical connectors in the processor socket. Do not remove the grease cover from a heat sink until you are instructed to do so.
- To ensure the best performance, check the manufacturing date on the new heat sink and make sure it does not exceed 2 years. Otherwise, wipe off the existing thermal grease and apply the new grease onto it for optimal thermal performance.

Notes:

- PHMs are keyed for the socket where they can be installed and for their orientation in the socket.
- See https://serverproven.lenovo.com for a list of processors supported for your server. All processors on the system board must have the same speed, number of cores, and frequency.
- Before you install a new PHM or replacement processor, update your system firmware to the latest level. See "Firmware updates" on page 9.
- Optional devices available for your system might have specific processor requirements. See the documentation that comes with the optional device for information.
- The PHM for your system might be different than the PHM shown in the illustrations.

Before installing a PHM:

Note: The heat sink, processor, and processor retainer for your system might be different than those shown in the illustrations.

1. Remove the existing PHM, if one is installed. See "Remove a processor and heat sink" on page 169.
2. If you are replacing a heat sink, replace the processor retainer. *Processor retainers should not be reused.*

   Note: Replacement processors come with both rectangular and square processor retainers. A rectangular retainer comes attached to the processor. The square retainer can be discarded.

   a. Remove the old processor retainer.

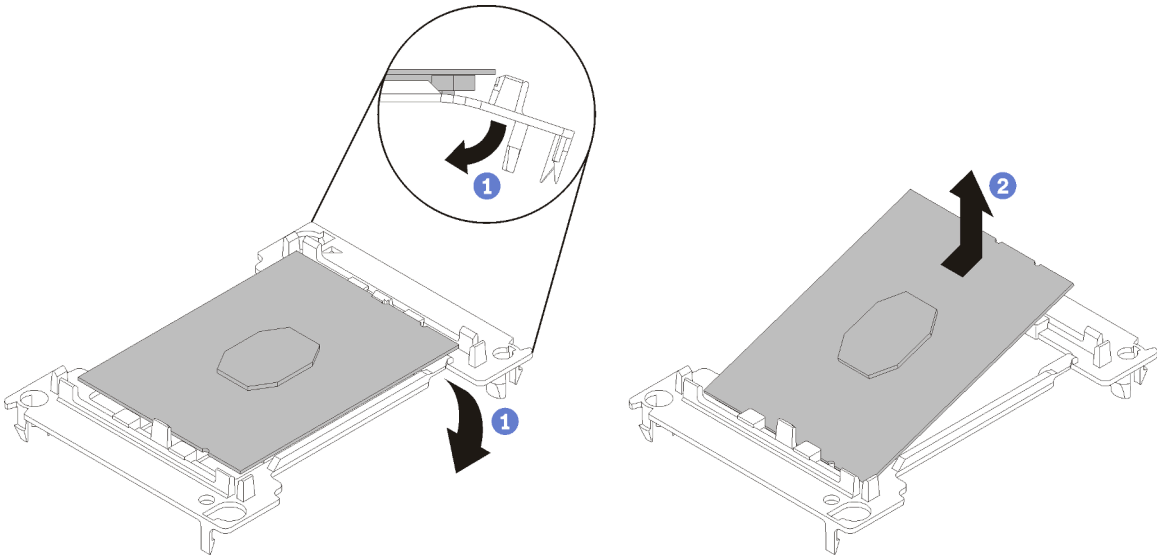

Figure 111. Removing a processor retainer

Note: When the processor is out of its retainer, hold the processor by the long edges to prevent touching the contacts or the thermal grease, if it is applied.

With the processor-contact side up, flex the ends of the retainer down and away from the processor to release the retaining clips; then, remove the processor from the retainer. Discard the old retainer.

b. Install a new processor retainer.

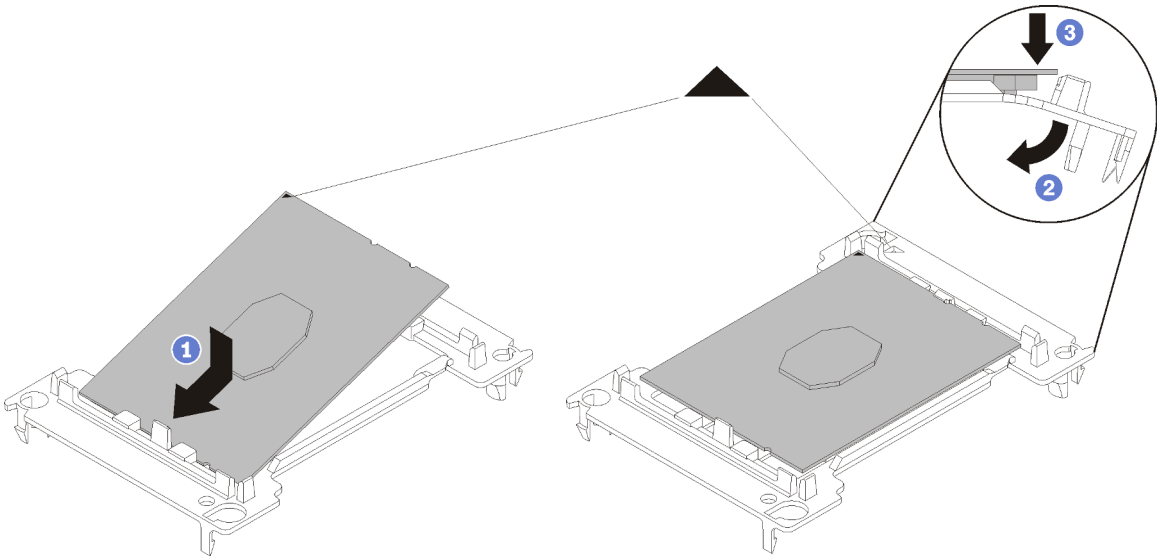

Figure 112. Installing a processor retainer

1) Position the processor on the new retainer so that the triangular marks align; then, insert the unmarked end of the processor into the retainer.
2) Holding the inserted end of the processor in place, flex the opposite end of the retainer down and away from the processor until you can press the processor under the clip on the retainer.

   To prevent the processor from falling out of the retainer after it is inserted, keep the processor-contact side up and hold the processor-retainer assembly by the sides of the retainer.

3) If there is any old thermal grease on the processor, gently clean the top of the processor using an alcohol cleaning pad.

Note: If you are applying new thermal grease on the top of the processor, make sure to do it after the alcohol has fully evaporated.

3. If you are replacing a processor:
   a. Remove the processor identification label from the heat sink and replace it with the new label that comes with the replacement processor.
   b. To ensure the best performance, check the manufacturing date on the new heat sink and make sure it does not exceed 2 years. Otherwise, wipe off the existing thermal grease and apply the new grease onto it for optimal thermal performance.
   c. Apply new thermal grease (1/2-syringe, 0.65 g) to the top of the new processor. If you have cleaned the top of the processor with an alcohol cleaning pad, make sure to apply the new thermal grease after the alcohol has fully evaporated.

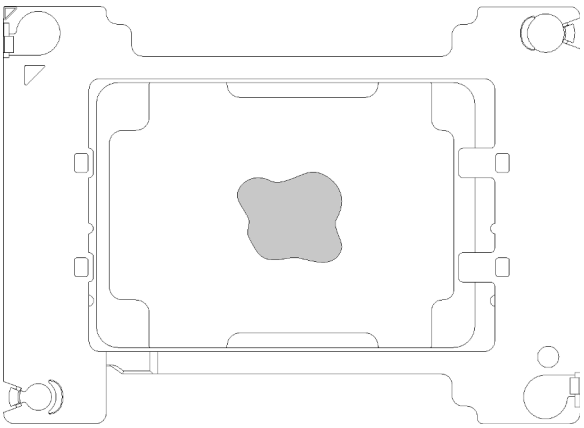

Figure 113. Thermal grease application

1) Carefully place the processor and retainer on a flat surface with the processor-contact side down.
2) Apply half a syringe of thermal grease, approximately 0.65 g, to the center of the processor top.

4. If you are replacing a heat sink, remove the processor identification label from the old heat sink and place it on the new heat sink in the same location. The label is on the side of the heat sink closest to the triangular alignment mark.

   If you are unable to remove the label and place it on the new heat sink, or if the label is damaged during transfer, write the processor serial number from the processor identification label on the new heat sink in the same location as the label would be placed using a permanent marker.

5. Assemble the processor and heat sink, if these components are separate.

   Notes:

   - If you are replacing a processor, install the heat sink onto the processor and retainer while the processor and retainer are in the shipping tray.
   - If you are replacing a heat sink, remove the heat sink from its shipping tray and place the processor and retainer in the opposite half of the heat sink shipping tray with the processor-contact side down. To prevent the processor from falling out of the retainer, hold the processor-retainer assembly by its sides with the processor-contact side up until you turn it over to fit in the shipping tray.

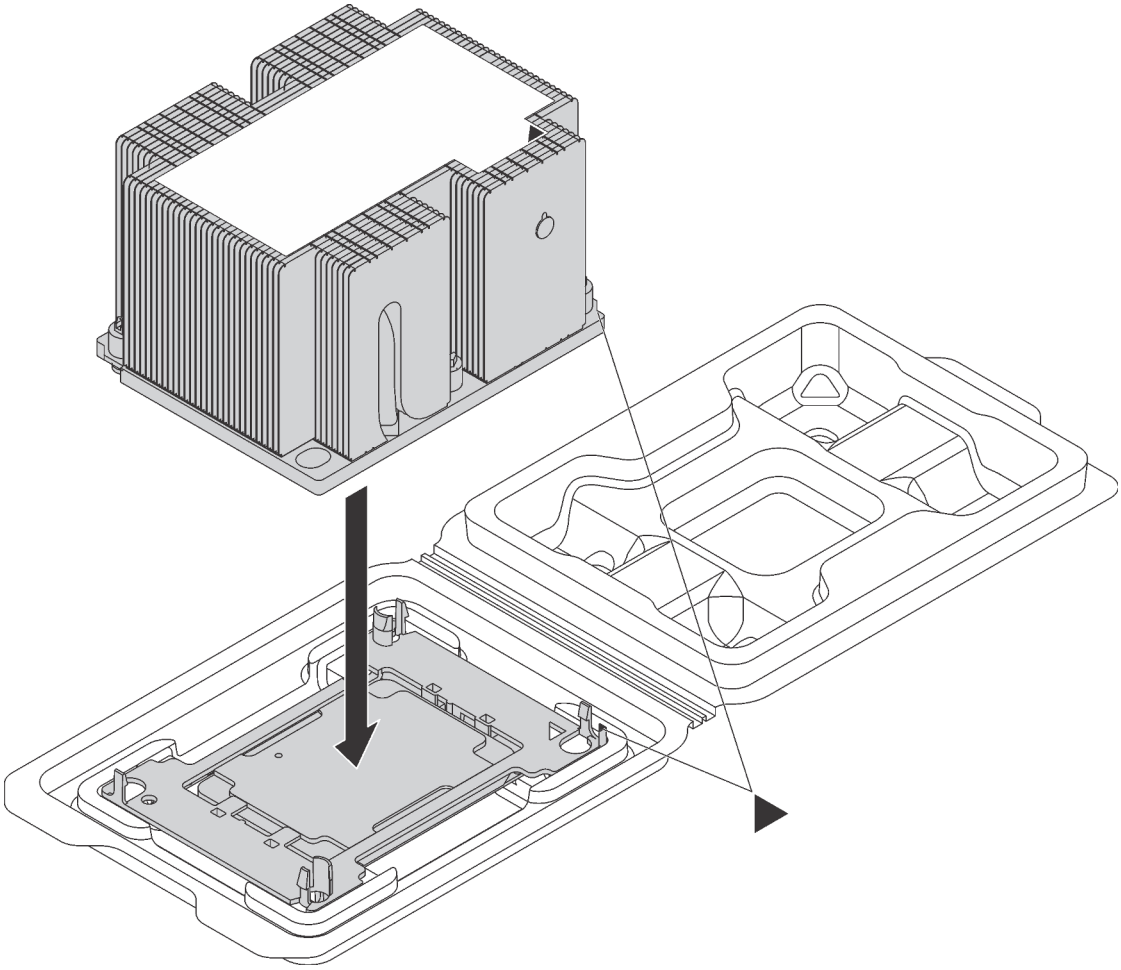

Figure 114. Assembling a PHM in the shipping tray

   a. Align the triangular marks on the processor retainer and the heat sink or align the triangular mark on the processor retainer with the notched corner of the heat sink.
   b. Insert the processor-retainer clips into the holes on the heat sink.
   c. Press the retainer into place until the clips at all four corners engage.

To install a PHM, complete the following steps:

Step 1. Remove the processor socket cover, if one is installed on the processor socket, by placing your fingers in the half-circles at each end of the cover and lifting it from the system board.

Step 2. Install the processor-heat-sink module on the system board.

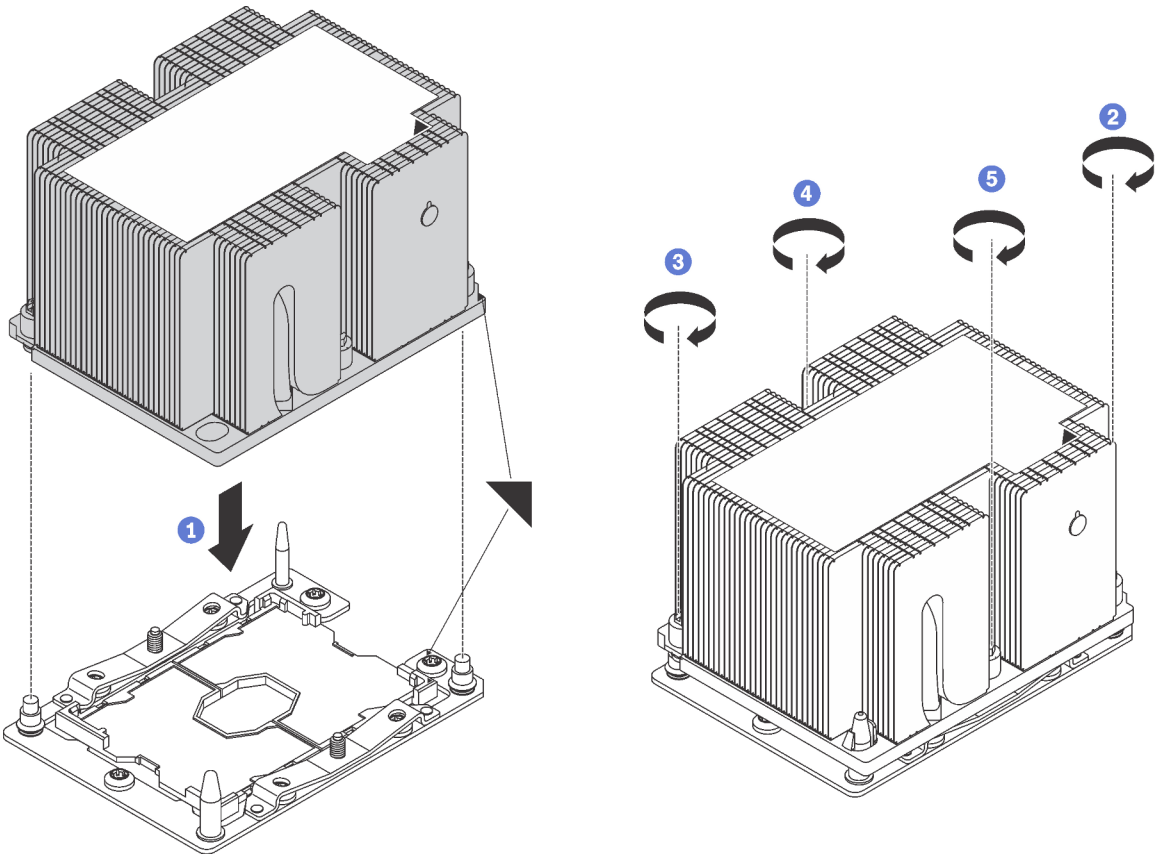

Figure 115. Installing a PHM

a. Align the triangular marks and guide pins on the processor socket with the PHM; then, insert the PHM into the processor socket.

   Attention: To prevent damage to components, make sure that you follow the indicated tightening sequence.

b. Fully tighten the Torx T30 captive fasteners *in the installation sequence shown* on the heat-sink label. Tighten the screws until they stop; then, visually inspect to make sure that there is no gap between the screw shoulder beneath the heat sink and the microprocessor socket. (For reference, the torque required for the nuts to fully tighten is 1.4 — 1.6 newton-meters, 12 — 14 inch-pounds).

After installing a PHM:

1. Install the air baffle. See “Install the air baffle” on page 72.
2. Install the top cover. See “Install the top cover” on page 69.
3. Push up on the latches on the slide rails and push the server back into the rack.
4. Tighten the two captive screws located on the front of the server to secure the server in the rack.

   Note: Always secure the system in the rack if your are moving the rack.
5. Connect all cables to the ports on the front of the server, including the management port, if necessary, and all PCIe adapter ports. The management port and PCIe adapter ports are located in the I/O expansion cage.
6. Connect power cords to both power supplies, which are located at the rear of the server.

Demo video

Watch the procedure on YouTube

System board replacement

Use this information to remove and install the system board.

Important: Before you return the system board, make sure that you install the CPU socket dust covers from the new system board. To replace a CPU socket dust cover:

1. Take a dust cover from the CPU socket assembly on the new system board and orient it correctly above the CPU socket assembly on the removed system board.
2. Gently press down the dust cover legs to the CPU socket assembly, pressing on the edges to avoid damage to the socket pins. You might hear a click on the dust cover is securely attached.
3. **Make sure** that the dust cover is securely attached to the CPU socket assembly.

S017

CAUTION:
Hazardous moving fan blades nearby. Keep fingers and other body parts away.

S012

CAUTION:
Hot surface nearby.

Remove the system board

Use this information to remove the system board.

Read the Installation Guidelines	**Power off** server and disconnect all power cords for this task	**ATTENTION:** **Static Sensitive Device** Ground package before opening

Before removing the system board:

1. Power off the server. See "Power off the server" on page 13.
2. Disconnect power cords from both power supplies, which are located in the rear of the server. Disengage both power supplies from the server.
3. Record the location of the cables in the front of the PCIe adapters that are installed in the I/O expansion cage at the front of the server, and disconnect the cables.
4. Disconnect the management port cable from the management port in the I/O expansion cage, if necessary.
5. Loosen the two captive screws located on the front of the server. If necessary, use a P2 screwdriver to loosen the screws.
6. Pull the server forward until the slide rails click into place.
7. Remove the top cover. See "Remove the top cover" on page 67.
8. Remove the air baffle. See "Remove the air baffle" on page 71.
9. Remove the system fan cage assembly. See "Remove the system fan cage" on page 81.
10. Remove the drive cage. See "Remove the drive cage" on page 137.
11. Remove all cables from the system board.

    Note: You do not need to remove the PCIe expansion cages or the I/O expansion cage. However, you do need to remove the cable connections for this cages from the system board.
12. Remove any of the following components that are installed on the system board and put them in a safe, static-protective place. See the related topics in this chapter.
    - DIMMs
    - M.2 backplane
    - TPM card (for Chinese Mainland only)
    - CMOS battery
    - PHM

      Important: Do not disassemble the PHM.
13. Remove the cable routing troughs that are installed on each side of the server chassis.

To remove the system board, complete the following step:

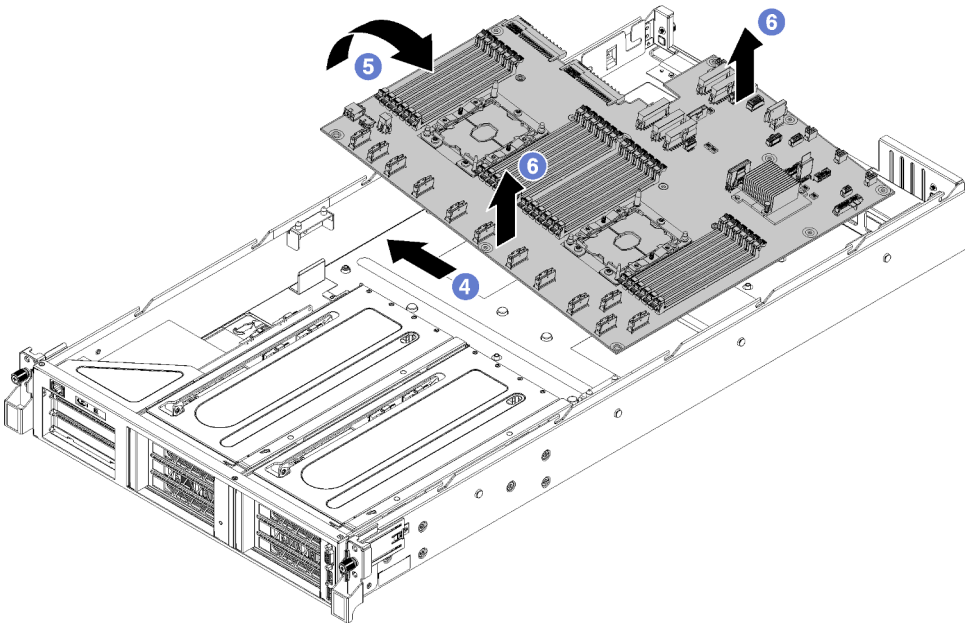

Figure 116. Removing the system board

Step 1. Remove the two air baffle posts.

Step 2. Remove the two M.2 adapter guideposts using the 6mm deep, nut drive tool (hex socket) that was provided with the system board replacement.

Step 3. Remove the 10 screws.

Step 4. Disengage the system board from the screw holes in the bottom of the server chassis and slide the system board slightly to the left of the server chassis (if you are looking at the server from the front).

Step 5. Rotate the left side of the system board up.

Step 6. Grasp the system board near the center at the front and rear edges; then, carefully lift the system board away from the server chassis.

If you are instructed to return the old system board, follow all packaging instructions and use any packaging materials that are provided.

Important: Before you return the system board, make sure that you install the CPU socket dust covers from the new system board. To replace a CPU socket dust cover:

1. Take a dust cover from the CPU socket assembly on the new system board and orient it correctly above the CPU socket assembly on the removed system board.
2. Gently press down the dust cover legs to the CPU socket assembly, pressing on the edges to avoid damage to the socket pins. You might hear a click on the dust cover is securely attached.
3. **Make sure** that the dust cover is securely attached to the CPU socket assembly.

Demo video

Watch the procedure on YouTube

Install the system board

Use this information to install the system board.

Read the Installation Guidelines	**Power off** server and disconnect all power cords for this task	**ATTENTION: Static Sensitive Device** Ground package before opening

Before installing the system board, touch the static-protective package that contains the new system board to any unpainted surface on the outside of the server. Then, take the new system board out of the package and place it on a static-protective surface.

To install the system board, complete the following steps:

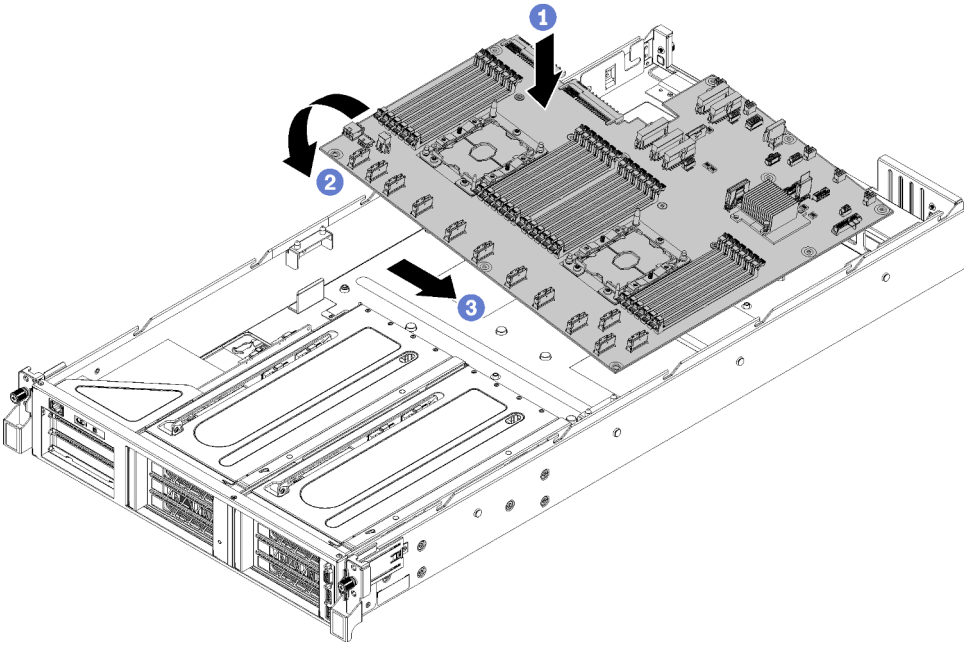

Figure 117. Installing the system board

Step 1. Carefully, lower the right edge of the system board (as you are looking at the front of the server) onto the chassis.

Step 2. Rotate the left edge of the system board onto the chassis.

Step 3. Slide the system board into place.

Step 4. Install the 10 screws.

Step 5. Install the two M.2 adapter guideposts. Use the 6mm nut drive tool (hex socket) that was provided with the system board replacement to install the adapter guideposts.

Step 6. Install the two air baffle posts.

After installing the system board:

Note: Make sure the latest version of ThinkSystem M.2 with Mirroring Enablement Kit Firmware is applied to avoid virtual disk/array missing after system board replacement.

1. Route the cables for the PCIe expansion cages and the I/O expansion cage from the front of the server to the rear of the server through the cable caps and cable guides to connect them to the system board.
2. Install any components that you removed from the failing system board.
   - DIMMs

- M.2 backplane
- TPM card (for Chinese Mainland only)
- CMOS battery
- PHM

3. Install the drive cage. See "Install the drive cage" on page 138.
4. Install the system fan cage. See "Install the system fan cage" on page 84.
5. Install the air baffle. See "Install the air baffle" on page 72.
6. Install the top cover. See "Install the top cover" on page 69.
7. Push up on the latches on the slide rails and push the server back into the rack.
8. Tighten the two captive screws located on the front of the server to secure the server in the rack.

   Note: Always secure the system in the rack if your are moving the rack.
9. Connect all cables to the ports on the front of the server, including the management port, if necessary, and all PCIe adapter ports. The management port and PCIe adapter ports are located in the I/O expansion cage.
10. Re-engage both power supplies.
11. Connect power cords to both power supplies, which are located at the rear of the server.
12. Power on the server.
13. Update the machine type and serial number with new vital product data (VPD). Use the Lenovo XClarity Provisioning Manager to update the machine type and serial number. See "Update the machine type and serial number" on page 181.
14. Enable TPM/TCM. See "Enable TPM" on page 183.
15. Optionally, enable UEFI Secure Boot. See "Enable UEFI Secure Boot" on page 186.

Demo video

Watch the procedure on YouTube

Update the machine type and serial number

After the system board is replaced by trained service technicians, the machine type and serial number must be updated.

There are two methods available to update the machine type and serial number:

- From Lenovo XClarity Provisioning Manager

  To update the machine type and serial number from Lenovo XClarity Provisioning Manager:

  1. Start the server and press F1 to display the Lenovo XClarity Provisioning Manager interface.
  2. If the power-on Administrator password is required, enter the password.
  3. From the System Summary page, click **Update VPD**.
  4. Update the machine type and serial number.
- From Lenovo XClarity Essentials OneCLI

  Lenovo XClarity Essentials OneCLI sets the machine type and serial number in the Lenovo XClarity Controller. Select one of the following methods to access the Lenovo XClarity Controller and set the machine type and serial number:

  – Operate from the target system, such as LAN or keyboard console style (KCS) access

– Remote access to the target system (TCP/IP based)

To update the machine type and serial number from Lenovo XClarity Essentials OneCLI:

1. Download and install Lenovo XClarity Essentials OneCLI.

   To download Lenovo XClarity Essentials OneCLI, go to the following site:

   https://datacentersupport.lenovo.com/solutions/HT116433

2. Copy and unpack the OneCLI package, which also includes other required files, to the server. Make sure that you unpack the OneCLI and the required files to the same directory.
3. After you have Lenovo XClarity Essentials OneCLI in place, type the following commands to set the machine type and serial number:

   ```
   onecli config set SYSTEM_PROD_DATA.SysInfoProdName <m/t_model> [access_method]
   onecli config set SYSTEM_PROD_DATA.SysInfoSerialNum <s/n> [access_method]
   ```

   Where:

   <m/t_model>
   The server machine type and model number. Type `mtm xxxxyyy`, where *xxxx* is the machine type and *yyy* is the server model number.

   <s/n>
   The serial number on the server. Type `sn zzzzzzz`, where *zzzzzzz* is the serial number.

   [access_method]
   The access method that you select to use from the following methods:

   – Online authenticated LAN access, type the command:

     [**--bmc**-`username` `xcc_user_id` **--bmc**-`password` `xcc_password`]

     Where:

     xcc_user_id
     The BMC/IMM/XCC account name (1 of 12 accounts). The default value is USERID.

     xcc_password
     The BMC/IMM/XCC account password (1 of 12 accounts).

     Example commands are as follows:
     ```
     onecli config set SYSTEM_PROD_DATA.SysInfoProdName <m/t_model> --bmc-username xcc_user_id
     --bmc-password xcc_password
     onecli config set SYSTEM_PROD_DATA.SysInfoSerialNum <s/n> --bmc-username xcc_user_id
     --bmc-password xcc_password
     ```

   – Online KCS access (unauthenticated and user restricted):

     You do not need to specify a value for *access_method* when you use this access method.

     Example commands are as follows:
     ```
     onecli config set SYSTEM_PROD_DATA.SysInfoProdName <m/t_model>
     onecli config set SYSTEM_PROD_DATA.SysInfoSerialNum <s/n>
     ```

     Note: The KCS access method uses the IPMI/KCS interface, which requires that the IPMI driver be installed.

   – Remote LAN access, type the command:
     [**--bmc** `xcc_user_id:xcc_password@xcc_external_ip`]

     Where:

xcc_external_ip
The BMC/IMM/XCC IP address. There is no default value. This parameter is required.

xcc_user_id
The BMC/IMM/XCC account (1 of 12 accounts). The default value is USERID.

xcc_password
The BMC/IMM/XCC account password (1 of 12 accounts).

Note: BMC, IMM, or XCC internal LAN/USB IP address, account name, and password are all valid for this command.

Example commands are as follows:

```
onecli config set SYSTEM_PROD_DATA.SysInfoProdName <m/t_model>
--bmc xcc_user_id:xcc_password@xcc_external_ip
onecli config set SYSTEM_PROD_DATA.SysInfoSerialNum <s/n>
--bmc xcc_user_id:xcc_password@xcc_external_ip
```

4. Reset the Lenovo XClarity Controller to the factory defaults. See "Resetting the BMC to Factory Default" section in the XCC documentation compatible with your server at https://pubs.lenovo.com/lxcc-overview/.

Enable TPM

The server supports Trusted Platform Module (TPM), Version 2.0.

Note: For customers in Chinese Mainland, integrated TPM is not supported. However, customers in Chinese Mainland can install a TPM card (sometimes called a daughter card).

When a system board is replaced, you must make sure that the TPM policy is set correctly.

CAUTION:
Take special care when setting the TPM policy. If it is not set correctly, the system board can become unusable.

Set the TPM policy

By default, a replacement system board is shipped with the TPM policy set to **undefined**. You must modify this setting to match the setting that was in place for the system board that is being replaced.

There are two methods available to set the TPM policy:

- From Lenovo XClarity Provisioning Manager

  To set the TPM policy from Lenovo XClarity Provisioning Manager:

  1. Start the server and press F1 to display the Lenovo XClarity Provisioning Manager interface.
  2. If the power-on Administrator password is required, enter the password.
  3. From the System Summary page, click **Update VPD**.
  4. Set the policy to one of the following settings.
     - **NationZ TPM 2.0 enabled - China only**. Customers in the Chinese Mainland should choose this setting if a NationZ TPM 2.0 adapter is installed.
     - **TPM enabled - ROW**. Customers outside of the Chinese Mainland should choose this setting.
     - **Permanently disabled**. Customers in the Chinese Mainland should use this setting if no TPM adapter is installed.

     Note: Although the setting **undefined** is available as a policy setting, it should not be used.

- From Lenovo XClarity Essentials OneCLI

Note: Please note that a Local IPMI user and password must be setup in Lenovo XClarity Controller for remote accessing to the target system.

To set the TPM policy from Lenovo XClarity Essentials OneCLI:

1. Read TpmTcmPolicyLock to check whether the TPM_TCM_POLICY has been locked:
   ```
   OneCli.exe config show imm.TpmTcmPolicyLock --override --imm <userid>:<password>@<ip_address>
   ```

   Note: The imm.TpmTcmPolicyLock value must be 'Disabled', which means TPM_TCM_POLICY is NOT locked and changes to the TPM_TCM_POLICY are permitted. If the return code is ‘Enabled’ then no changes to the policy are permitted. The planar may still be used if the desired setting is correct for the system being replaced.
2. Configure the TPM_TCM_POLICY into XCC:
   - For customers in Chinese Mainland with no TPM, or customers that require to disable TPM:
     ```
     OneCli.exe config set imm.TpmTcmPolicy "NeitherTpmNorTcm" --override  --imm <userid>:<password>@<ip_address>
     ```
   - For customers in Chinese Mainland that require to enable TPM:
     ```
     OneCli.exe config set imm.TpmTcmPolicy "NationZTPM20Only" --override --imm <userid>:<password>@<ip_address>
     ```
   - For customers outside Chinese Mainland that require to enable TPM:
     ```
     OneCli.exe config set imm.TpmTcmPolicy "TpmOnly" --override --imm <userid>:<password>@<ip_address>
     ```
3. Issue reset command to reset system:
   ```
   OneCli.exe misc ospower reboot --imm <userid>:<password>@<ip_address>
   ```
4. Read back the value to check whether the change has been accepted:
   ```
   OneCli.exe config show imm.TpmTcmPolicy --override --imm <userid>:<password>@<ip_address>
   ```

   Notes:

   - If the read back value is matched it means the TPM_TCM_POLICY has been set correctly.

     imm.TpmTcmPolicy is defined as below:

     - Value 0 use string “Undefined” , which means UNDEFINED policy.
     - Value 1 use string “NeitherTpmNorTcm”, which means TPM_PERM_DISABLED.
     - Value 2 use string “TpmOnly”, which means TPM_ALLOWED.
     - Value 4 use string “NationZTPM20Only”, which means NationZ_TPM20_ALLOWED.
   - Below 4 steps must also be used to ‘lock’ the TPM_TCM_POLICY when using OneCli/ASU commands:
5. Read TpmTcmPolicyLock to check whether the TPM_TCM_POLICY has been locked , command as below:
   ```
   OneCli.exe config show imm.TpmTcmPolicyLock --override --imm <userid>:<password>@<ip_address>
   ```

   The value must be 'Disabled', it means TPM_TCM_POLICY is NOT locked and must be set.
6. Lock the TPM_TCM_POLICY:
   ```
   OneCli.exe config set imm.TpmTcmPolicyLock "Enabled"--override --imm <userid>:<password>@<ip_address>
   ```
7. Issue reset command to reset system, command as below:
   ```
   OneCli.exe misc ospower reboot --imm <userid>:<password>@<ip_address>
   ```

   During the reset, UEFI will read the value from imm.TpmTcmPolicyLock, if the value is 'Enabled' and the imm.TpmTcmPolicy value is valid, UEFI will lock the TPM_TCM_POLICY setting.

   Note: The valid values for imm.TpmTcmPolicy include 'NeitherTpmNorTcm', 'TpmOnly', and 'NationZTPM20Only'.

   If the imm.TpmTcmPolicyLock is set as 'Enabled' but imm.TpmTcmPolicy value is invalid, UEFI will reject the 'lock' request and change imm.TpmTcmPolicyLock back to 'Disabled'.

8. Read back the value to check whether the ‘Lock’ is accepted or rejected. command as below:

   ```
   OneCli.exe config show imm.TpmTcmPolicy --override --imm <userid>:<password>@<ip_address>
   ```

   Note: If the read back value is changed from 'Disabled' to 'Enabled' that means the TPM_TCM_POLICY has been locked successfully. There is no method to unlock a policy once it has been set other than replacing system board.

   imm.TpmTcmPolicyLock is defined as below:

   Value 1 uses string “Enabled" , which means lock the policy. Other values are not accepted.

Assert Physical Presence

Before you can assert Physical Presence, the Physical Presence Policy must be enabled. By default, the Physical Presence Policy is enabled with a timeout of 30 minutes.

There are two ways to assert the Physical Presence:

1. If the Physical Presence Policy is enabled, you can assert Physical Presence through the Lenovo XClarity Provisioning Manager or through the Lenovo XClarity Controller.
2. Switch the hardware jumpers on the system board.

Notes: If the Physical Presence Policy has been disabled:

1. Set the hardware Physical Presence jumper on the system board to assert Physical Presence.
2. Enable the Physical Presence Policy using either F1 (UEFI Settings) or Lenovo XClarity Essentials OneCLI.

Assert Physical Presence through the Lenovo XClarity Controller

Complete the following steps to assert Physical Presence through the Lenovo XClarity Controller:

1. Log in to the Lenovo XClarity Controller interface.

   For information about logging in to the Lenovo XClarity Controller, see the “Opening and Using the XClarity Controller Web Interface” section in the XCC documentation version compatible with your server at https://pubs.lenovo.com/lxcc-overview/.
2. Click **BMC Configuration → Security** and verify that Physical Presence is set to **assert**.

Assert Physical Presence through the hardware

You can also assert hardware Physical Presence through the use of a jumper on the system board. For more information about asserting hardware Physical Presence through the use of a jumper, see:

“Switch blocks” on page 25

Set the TPM version

To be able to set the TPM version, Physical Presence must be asserted.

The Lenovo XClarity Provisioning Manager or the Lenovo XClarity Essentials OneCLI can be used to set the TPM version.

To set the TPM version:

1. Download and install Lenovo XClarity Essentials OneCLI.
   a. Go to http://datacentersupport.lenovo.com and navigate to the support page for your server.
   b. Click **Drivers & Software**.

c. Navigate to the version of Lenovo XClarity Essentials OneCLI for your operating system and download the package.

2. Run the following command to set the TPM version:

   To set the TPM version to version 2.0:

   ```
   OneCli.exe config set TPMVersion.TPMVersion "Update to TPM2.0 compliant" -v --override --host <ip_address>
              --user <userid> --password <password>
   ```

   where:

   - *<userid>:<password>* are the credentials used to access the BMC (Lenovo XClarity Controller interface) of your server. The default user ID is USERID, and the default password is PASSW0RD (zero, not an uppercase o).
   - *<ip_address>* is the IP address of the BMC.

   For more information about the Lenovo XClarity Essentials OneCLI `set` command, see:

   https://pubs.lenovo.com/lxce-onecli/onecli_r_set_command

3. Alternatively, you can use the following Advanced Settings Utility (ASU) commands:

   To set the TPM version to version 2.0:

   ```
   asu64 set TPMVersion.TPMVersion "Update to TPM2.0 compliant" --host <ip_address>
             --user <userid> --password <password>  --override
   ```

   where:

   - *<userid>* and *<password>* are the credentials used to the BMC (Lenovo XClarity Controller interface) of your server. The default user ID is USERID, and the default password is PASSW0RD (zero, not an uppercase o).sure
   - *<ip_address>* is the IP address of the BMC.

Enable UEFI Secure Boot

Optionally, you can enable UEFI Secure Boot.

There are two methods available to enable UEFI Secure Boot:

- From Lenovo XClarity Provisioning Manager

  To enable UEFI Secure Boot from Lenovo XClarity Provisioning Manager:

  1. Start the server and press F1 to display the Lenovo XClarity Provisioning Manager interface.
  2. If the power-on Administrator password is required, enter the password.
  3. From the UEFI Setup page, click **System Settings → Security → Secure Boot**.
  4. Enable Secure Boot and save the settings.

- From Lenovo XClarity Essentials OneCLI

  To enable UEFI Secure Boot from Lenovo XClarity Essentials OneCLI:

  1. Download and install Lenovo XClarity Essentials OneCLI.

     To download Lenovo XClarity Essentials OneCLI, go to the following site:

     https://datacentersupport.lenovo.com/solutions/HT116433

  2. Run the following command to enable Secure Boot:

     ```
     OneCli.exe config set SecureBootConfiguration.SecureBootSetting Enabled
                        --bmc <userid>:<password>@<ip_address>
     ```

     where:

- *<userid>:<password>* are the credentials used to access the BMC (Lenovo XClarity Controller interface) of your server. The default user ID is USERID, and the default password is PASSW0RD (zero, not an uppercase o)
- *<ip_address>* is the IP address of the BMC.

For more information about the Lenovo XClarity Essentials OneCLI `set` command, see:

https://pubs.lenovo.com/lxce-onecli/onecli_r_set_command

Chapter 4. Problem determination

Use the information in this section to isolate and resolve issues that you might encounter while using your server.

To isolate a problem, you should typically begin with the Lenovo XClarity Controller event log.

Event logs

An *alert* is a message or other indication that signals an event or an impending event. Alerts are generated by the Lenovo XClarity Controller or by UEFI in the servers. These alerts are stored in the Lenovo XClarity Controller Event Log. If the server is managed by the Chassis Management Module 2 or by the Lenovo XClarity Administrator, alerts are automatically forwarded to those management applications.

Note: For a listing of events, including user actions that might need to be performed to recover from an event, see the *Messages and Codes Reference*, which is available at:http://thinksystem.lenovofiles.com/help/topic/7Y37/pdf_files.html

Lenovo XClarity Administrator event log

If you are using Lenovo XClarity Administrator to manage server, network, and storage hardware, you can view the events from all managed devices through the XClarity Administrator.

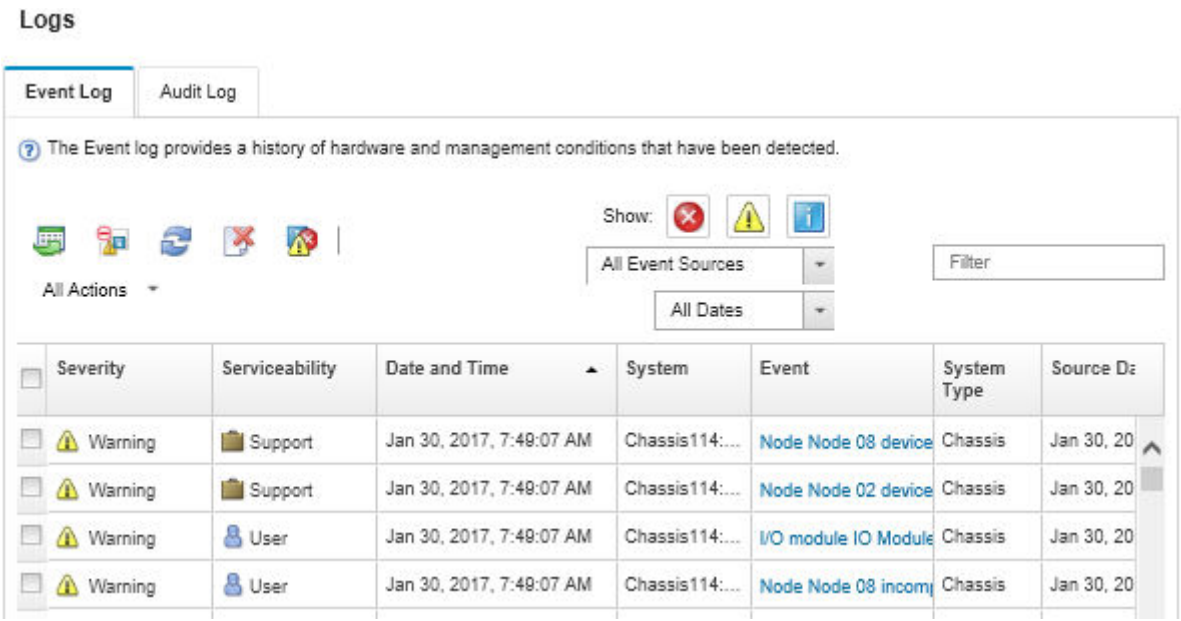

Figure 118. Lenovo XClarity Administrator event log

For more information about working with events from XClarity Administrator, see:

https://pubs.lenovo.com/lxca/events_vieweventlog

Lenovo XClarity Controller event log

The Lenovo XClarity Controller monitors the physical state of the server and its components using sensors that measure internal physical variables such as temperature, power-supply voltages, fan speeds, and

© Copyright Lenovo 2018, 2021

component status. The Lenovo XClarity Controller provides various interfaces to systems management software and to system administrators and users to enable remote management and control of a server.

The Lenovo XClarity Controller monitors all components of the server and posts events in the Lenovo XClarity Controller event log.

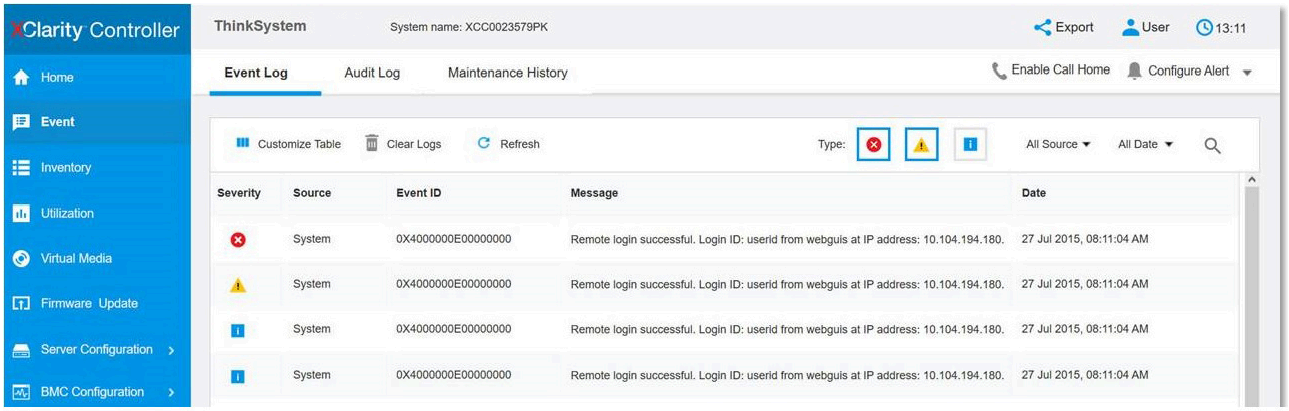

Figure 119. Lenovo XClarity Controller event log

For more information about accessing the Lenovo XClarity Controller event log, see:

"Viewing Event Logs" section in the XCC documentation compatible with your server at https://pubs.lenovo.com/lxcc-overview/

General problem determination procedures

Use the information in this section to resolve problems if the event log does not contain specific errors or the server is inoperative.

If you are not sure about the cause of a problem and the power supplies are working correctly, complete the following steps to attempt to resolve the problem:

1. Power off the server.
2. Make sure that the server is cabled correctly.
3. Remove or disconnect the following devices if applicable, one at a time, until you find the failure. Power on and configure the server each time you remove or disconnect a device.
   - Any external devices,
   - Surge-suppressor device (on the server).
   - Printer, mouse, and non-Lenovo devices,
   - Each adapter.
   - Hard disk drives.
   - Memory modules until you reach the minimum configuration that is supported for the server.

   Note: See System configuration to determine the minimum configuration for your server.
4. Power on the server.

If the problem is solved when you remove an adapter from the server, but the problem recurs when you install the same adapter again, suspect the adapter. If the problem recurs when you replace the adapter with a different one, try a different PCIe slot.

If the problem appears to be a networking problem and the server passes all system tests, suspect a network cabling problem that is external to the server.

Resolving suspected power problems

Power problems can be difficult to solve. For example, a short circuit can exist anywhere on any of the power distribution buses. Usually, a short circuit will cause the power subsystem to shut down because of an overcurrent condition.

Note: With GPUs greater than 250W (such as AMD MI-25) and CPUs greater than 165W and 165W low TCase SKUs (8180, 8168, 6154, 6146, and 6144), full performance cannot be guaranteed and CPU throttling might occur for ambient temperatures above 30°C.

Complete the following steps to diagnose and resolve a suspected power problem.

Step 1. Check the event log and resolve any errors related to the power.

Note: Start with the event log of the application that is managing the server. For more information about event logs, see "Event logs" on page 189.

Step 2. Check for short circuits, for example, if a loose screw is causing a short circuit on a circuit board.

Step 3. Remove the adapters and disconnect the cables and power cords to all internal and external devices until the server is at the minimum configuration that is required for the server to start.

Note: See System configuration to determine the minimum configuration for your server.

Step 4. Reconnect all ac power cords and turn on the server. If the server starts successfully, reseat the adapters and devices one at a time until the problem is isolated.

If the server does not start from the minimum configuration, replace the components in the minimum configuration one at a time until the problem is isolated.

Resolving suspected Ethernet controller problems

The method that you use to test the Ethernet controller depends on which operating system you are using. See the operating-system documentation for information about Ethernet controllers, and see the Ethernet controller device-driver readme file.

Complete the following steps to attempt to resolve suspected problems with the Ethernet controller.

Step 1. Make sure that the correct device drivers, which come with the server are installed and that they are at the latest level.

Step 2. Make sure that the Ethernet cable is installed correctly.

- The cable must be securely attached at all connections. If the cable is attached but the problem remains, try a different cable.
- If you set the Ethernet controller to operate at 100 Mbps or 1000 Mbps, you must use Category 5 cabling.

Step 3. Determine whether the hub supports auto-negotiation. If it does not, try configuring the integrated Ethernet controller manually to match the speed and duplex mode of the hub.

Step 4. Check the Ethernet controller LEDs on the rear panel of the server. These LEDs indicate whether there is a problem with the connector, cable, or hub.

- The Ethernet link status LED is lit when the Ethernet controller receives a link pulse from the hub. If the LED is off, there might be a defective connector or cable or a problem with the hub.
- The Ethernet transmit/receive activity LED is lit when the Ethernet controller sends or receives data over the Ethernet network. If the Ethernet transmit/receive activity is off, make sure that the hub and network are operating and that the correct device drivers are installed.

Step 5. Check the Network activity LED on the rear of the server. The Network activity LED is lit when data is active on the Ethernet network. If the Network activity LED is off, make sure that the hub and network are operating and that the correct device drivers are installed.

Step 6. Check for operating-system-specific causes of the problem, and also make sure that the operating system drivers are installed correctly.

Step 7. Make sure that the device drivers on the client and server are using the same protocol.

If the Ethernet controller still cannot connect to the network but the hardware appears to be working, the network administrator must investigate other possible causes of the error.

Troubleshooting by symptom

Use this information to find solutions to problems that have identifiable symptoms.

To use the symptom-based troubleshooting information in this section, complete the following steps:

1. Check the the Lenovo XClarity Controller event log.

   For more information about event logs, see "Event logs" on page 189.
2. Review this section to find the symptoms that you are experiencing and follow the suggested actions to resolve the issue.
3. If the problem persists, contact Support (see "Contacting Support" on page 215).

Power on and power off problems

See this section to resolve issues when powering on or powering off the server.

- "Embedded hypervisor is not in the boot list" on page 192
- "Server does not power on" on page 192
- "Server does not power off" on page 193
- "Unexpected shutdown with LED not lit" on page 193

Embedded hypervisor is not in the boot list

Complete the following steps until the problem is resolved:

1. Make sure that the optional embedded hypervisor flash device is selected on the boot manager `<F12> Select Boot Device` at startup.
2. Make sure that the embedded hypervisor flash device is seated in the connector correctly.
3. See the documentation that comes with the optional embedded hypervisor flash device to validate that the device is configured correctly.
4. Make sure that other software works on the server.

Server does not power on

Complete the following steps until the problem is resolved:

Note: The power-control button will not function until approximately 5 to 10 seconds after the server has been connected to power.

1. Make sure that the power-control button is working correctly:
   a. Disconnect the server power cords.
   b. Reconnect the power cords.

c. (Trained technician only) Reseat the operator information panel cable, and then repeat steps 1a and 1b.
   - (Trained technician only) If the server starts, reseat the operator information panel. If the problem remains, replace the operator information panel.
   - If the server does not start, bypass the power-control button by using the force power-on jumper. If the server starts, reseat the operator information panel. If the problem remains, replace the operator information panel.

2. Make sure that the reset button is working correctly:
   a. Disconnect the server power cords.
   b. Reconnect the power cords.
   c. (Trained technician only) Reseat the operator information panel cable, and then repeat steps 2a and 2b.
      - (Trained technician only) If the server starts, replace the operator information panel.
      - If the server does not start, go to step 3.
3. Make sure that both power supplies installed in the server are of the same type. Mixing different power supplies in the server will cause a system error (the system-error LED on the front panel turns on).
4. Make sure that:
   - The power cords are correctly connected to the server and to a working electrical outlet.
   - The type of memory that is installed is correct.
   - The DIMMs are fully seated.
   - The LEDs on the power supply do not indicate a problem.
   - The processors are installed in the correct sequence.
5. Reseat the following components:
   a. Operator information panel connector
   b. Power supplies
6. Replace the following components. restarting the server each time:
   a. Operator information panel connector
   b. Power supplies
7. If you just installed an optional device, remove it, and restart the server. If the server now starts, you might have installed more devices than the power supply supports.
8. See "Power Supply LEDs" on page 21.

Server does not power off

Complete the following steps until the problem is resolved:

1. Determine whether you are using an Advanced Configuration and Power Interface (ACPI) or a non-ACPI operating system. If you are using a non-ACPI operating system, complete the following steps:
   a. Press `Ctrl+Alt+Delete`.
   b. Turn off the server by pressing the power-control button and holding it down for 5 seconds.
   c. Restart the server.
   d. If the server fails POST and the power-control button does not work, disconnect the power cord for 20 seconds; then, reconnect the power cord and restart the server.
2. If the problem remains or if you are using an ACPI-aware operating system, suspect the system board.

Unexpected shutdown with LED not lit

Complete the following steps until the problem is resolved:

1. Check the XCC event log, and resolve related errors if found any.
2. Reseat power supply.
3. If the error recurs, replace power supply.

Memory problems

Use this information to resolve issues related to memory.

- "Displayed system memory less than installed physical memory" on page 194
- "Multiple rows of DIMMs in a branch identified as failing" on page 194

Displayed system memory less than installed physical memory

Complete the following steps until the problem is resolved:

Note: Each time you install or remove a DIMM, you must disconnect the server from the power source; then, wait 10 seconds before restarting the server.

1. Make sure that:
   - No error LEDs are lit on the operator panel.
   - Memory mirrored channel does not account for the discrepancy.
   - The memory modules are seated correctly.
   - You have installed the correct type of memory.
   - If you changed the memory, you updated the memory configuration in the Setup utility.
   - All banks of memory are enabled. The server might have automatically disabled a memory bank when it detected a problem, or a memory bank might have been manually disabled.
   - There is no memory mismatch when the server is at the minimum memory configuration.
2. Reseat the DIMMs, and then restart the server.
3. Run memory diagnostics. When you start a server and press F1, the Lenovo XClarity Provisioning Manager interface is displayed by default. You can perform memory diagnostics from this interface. From the Diagnostic page, click **Run Diagnostic → Memory test**.
4. Check the POST error log:
   - If a DIMM was disabled by a systems-management interrupt (SMI), replace the DIMM.
   - If a DIMM was disabled by the user or by POST, reseat the DIMM; then, run the Setup utility and enable the DIMM.
5. Reseat the DIMM.
6. Restart the server.

Multiple rows of DIMMs in a branch identified as failing

1. Reseat the DIMMs; then, restart the server.
2. Remove the lowest-numbered DIMM pair of those that are identified and replace it with an identical known good DIMM; then, restart the server. Repeat as necessary. If the failures continue after all identified DIMMs are replaced, go to step 4.
3. Return the removed DIMMs, one at a time, to their original connectors, restarting the server after each DIMM, until a DIMM fails. Replace each failing DIMM with an identical known good DIMM, restarting the server after each DIMM replacement. Repeat step 3 until you have tested all removed DIMMs.
4. Replace the lowest-numbered DIMM of those identified; then, restart the server. Repeat as necessary.

5. Reverse the DIMMs between the channels (of the same processor), and then restart the server. If the problem is related to a DIMM, replace the failing DIMM.
6. (Trained technician only) Replace the system board.

Hard disk drive problems

Use this information to resolve issues related to the hard disk drives.

- "Server cannot recognize a hard drive" on page 195
- "Multiple hard drives fail" on page 196
- "Multiple hard drives are offline" on page 196
- "A replacement hard disk drive does not rebuild" on page 196
- "Green hard disk drive activity LED does not represent actual state of associated drive" on page 196
- "Yellow hard disk drive status LED does not represent actual state of associated drive" on page 196

Server cannot recognize a hard drive

Complete the following steps until the problem is solved.

1. Observe the associated yellow hard disk drive status LED. If the LED is lit, it indicates a drive fault.
2. If the LED is lit, remove the drive from the bay, wait 45 seconds, and reinsert the drive, making sure that the drive assembly connects to the hard disk drive backplane.
3. Observe the associated green hard disk drive activity LED and the yellow status LED:
   - If the green activity LED is flashing and the yellow status LED is not lit, the drive is recognized by the controller and is working correctly. Run the diagnostics tests for the hard disk drives. When you start a server and press F1, the Lenovo XClarity Provisioning Manager interface is displayed by default. You can perform hard drive diagnostics from this interface. From the Diagnostic page, click **Run Diagnostic → HDD test**.
   - If the green activity LED is flashing and the yellow status LED is flashing slowly, the drive is recognized by the controller and is rebuilding.
   - If neither LED is lit or flashing, check the hard disk drive backplane.
   - If the green activity LED is flashing and the yellow status LED is lit, replace the drive. If the activity of the LEDs remains the same, go to step Hard disk drive problems. If the activity of the LEDs changes, return to step 1.
4. Make sure that the hard disk drive backplane is correctly seated. When it is correctly seated, the drive assemblies correctly connect to the backplane without bowing or causing movement of the backplane.
5. Reseat the backplane power cable and repeat steps 1 through 3.
6. Reseat the backplane signal cable and repeat steps 1 through 3.
7. Suspect the backplane signal cable or the backplane:
   - Replace the affected backplane signal cable.
   - Replace the affected backplane.
8. Run the diagnostics tests for the hard disk drives. When you start a server and press F1, the Lenovo XClarity Provisioning Manager interface is displayed by default. You can perform hard drive diagnostics from this interface. From the Diagnostic page, click **Run Diagnostic → HDD test**.

   Based on those tests:

   - If the adapter passes the test but the drives are not recognized, replace the backplane signal cable and run the tests again.
   - Replace the backplane.

- If the adapter fails the test, disconnect the backplane signal cable from the adapter and run the tests again.
- If the adapter fails the test, replace the adapter.

Multiple hard drives fail

Complete the following steps until the problem is solved:

- View the Lenovo XClarity Controller event log for events related to power supplies or vibration issues and resolve those events.
- Make sure that the device drivers and firmware for the hard disk drive and server are at the latest level

Important: Some cluster solutions require specific code levels or coordinated code updates. If the device is part of a cluster solution, verify that the latest level of code is supported for the cluster solution before you update the code.

Multiple hard drives are offline

Complete the following steps until the problem is solved:

- View the Lenovo XClarity Controller event log for events related to power supplies or vibration issues and resolve those events.
- View the storage subsystem log for events related to the storage subsystem and resolve those events.

A replacement hard disk drive does not rebuild

Complete the following steps until the problem is solved:

1. Make sure that the hard disk drive is recognized by the adapter (the green hard disk drive activity LED is flashing).
2. Review the SAS/SATA RAID adapter documentation to determine the correct configuration parameters and settings.

Green hard disk drive activity LED does not represent actual state of associated drive

Complete the following steps until the problem is solved:

1. If the green hard disk drive activity LED does not flash when the drive is in use, run the diagnostics tests for the hard disk drives. When you start a server and press F1, the Lenovo XClarity Provisioning Manager interface is displayed by default. You can perform hard drive diagnostics from this interface. From the Diagnostic page, click **Run Diagnostic → HDD test**.
2. If the drive passes the test, replace the backplane.
3. If the drive fails the test, replace the drive.

Yellow hard disk drive status LED does not represent actual state of associated drive

Complete the following steps until the problem is solved:

1. Turn off the server.
2. Reseat the SAS/SATA adapter (if applicable).
3. Reseat the backplane signal cable and backplane power cable.
4. Reseat the hard disk drive.
5. Power on the server and observe the activity of the hard disk drive LEDs.

GPU performance problems

In the event of high temperatures, the GPUs will self-throttle, which can cause a reduction in performance. Under normal operation this should never occur because the XCC actively monitors GPU temperatures and adjusts system fans accordingly.

However, additional scenarios will cause the GPUs to enter an Emergency Power Reduction (Power Brake) state, which will impact performance:

- A loss of power.
- A Power Supply Throttle assertion (typically encountered if a power supply is too hot).
- Inlet temperature exceeds supported ASHRAE specification (e.g. 35°C for ASHRAE A2).
- Inlet temperate exceeds 27°C in combination with fan failure.

To monitor if any of these scenarios of occurred, check the System Error LED and the XClarity Controller event log for errors related to redundancy, a degraded state, or a PCIe Power Brake.

Complete the following steps to resolve the issue:

1. Make sure that two 2000W power supplies are installed, powered, and operational (no errors).
2. Check the XClarity Controller event log for events related to fan failures. If errors occur, replacing the failing fan.
3. Check the ambient temperature of the datacenter where the server is installed.
4. Check the PCIe power brake mode.

PCIe cabling or expansion cage configuration problems

Use this information to resolve issues related to PCIe cabling.

In the event of a loose or incorrectly cabled PCIe cable connection, the fault LED will be lit, and the following event will be logged in the XClarity Controller event log:

```
The connector %s has encountered a configuration error.
```

where *%s* is one of the following strings:

- IO Riser
- PCIe Expansion 1
- PCIe Expansion 2
- PCIe Conn *N*, where *N* is a number from 1 to 12 that represents the PCIe connector on the system board.

Complete the following steps to resolve the issue:

- To resolve I/O expansion cage errors, validate that jumper 11 (J11) on the I/O expansion cage card is set to **Default**.
- To resolve PCIe expansion cage 1 or PCIe expansion cage 2 errors, validate that jumper 11 (J11) on the PCIe expansion cage care is set to **Inverted**.
- Complete the following steps to resolve PCIe Conn *N* errors:
  1. Make sure that all PCIe cables are connected to the proper locations. For more information about cable routing, see:
     - "I/O expansion cage cable routing" on page 31
     - "3-slot PCIe expansion cage 1 cable routing" on page 35
     - "3-slot PCIe expansion cage 2 cable routing" on page 44

2. Check for loose connections, ensuring that all cables are properly seated and latched on the system board and on the expansion cage cards.

Monitor and video problems

Use this information to solve problems related to a monitor or video.

- "Incorrect characters are displayed" on page 198
- "Screen is blank" on page 198
- "Screen goes blank when you start some application programs" on page 198
- "The monitor has screen jitter, or the screen image is wavy, unreadable, rolling, or distorted." on page 198
- "The wrong characters appear on the screen" on page 199

Incorrect characters are displayed

Complete the following steps:

1. Verify that the language and locality settings are correct for the keyboard and operating system.
2. If the wrong language is displayed, update the server firmware to the latest level. See "Firmware updates" on page 9.

Screen is blank

1. If the server is attached to a KVM switch, bypass the KVM switch to eliminate it as a possible cause of the problem: connect the monitor cable directly to the correct connector on the rear of the server.
2. The management controller remote presence function is disabled if you install an optional video adapter. To use the management controller remote presence function, remove the optional video adapter.
3. If the server installed with the graphical adapters while turning on the server, the Lenovo logo displays on the screen after approximately 3 minutes. This is normal operation while the system loads.
4. Make sure that:
   - The server is turned on. If there is no power to the server.
   - The monitor cables are connected correctly.
   - The monitor is turned on and the brightness and contrast controls are adjusted correctly.
5. Make sure that the correct server is controlling the monitor, if applicable.
6. Make sure that corrupted server firmware is not affecting the video; see "Firmware updates" on page 9.
7. Replace the following components one at a time, in the order shown, restarting the server each time:
   a. Monitor
   b. Video adapter (if one is installed)
   c. (Trained technician only) System board

Screen goes blank when you start some application programs

1. Make sure that:
   - The application program is not setting a display mode that is higher than the capability of the monitor.
   - You installed the necessary device drivers for the application.

The monitor has screen jitter, or the screen image is wavy, unreadable, rolling, or distorted.

1. If the monitor self-tests show that the monitor is working correctly, consider the location of the monitor. Magnetic fields around other devices (such as transformers, appliances, fluorescents, and other monitors) can cause screen jitter or wavy, unreadable, rolling, or distorted screen images. If this happens, turn off the monitor.

Attention: Moving a color monitor while it is turned on might cause screen discoloration.

Move the device and the monitor at least 305 mm (12 in.) apart, and turn on the monitor.

Notes:

a. To prevent diskette drive read/write errors, make sure that the distance between the monitor and any external diskette drive is at least 76 mm (3 in.).

b. Non-Lenovo monitor cables might cause unpredictable problems.

2. Reseat the monitor cable.
3. Replace the components listed in step 2 one at a time, in the order shown, restarting the server each time:
   a. Monitor cable
   b. Video adapter (if one is installed)
   c. Monitor
   d. (Trained technician only) System board

The wrong characters appear on the screen

Complete the following steps until the problem is solved:

1. Verify that the language and locality settings are correct for the keyboard and operating system.
2. If the wrong language is displayed, update the server firmware to the latest level. See "Firmware updates" on page 9.

Keyboard, mouse, or USB-device problems

Use this information to solve problems related to a keyboard, mouse, or USB device.

- "All or some keys on the keyboard do not work." on page 199
- "Mouse does not work." on page 199
- "USB-device does not work." on page 200

All or some keys on the keyboard do not work.

1. Make sure that:
   - The keyboard cable is securely connected.
   - The server and the monitor are turned on.
2. If you are using a USB keyboard, run the Setup utility and enable keyboardless operation.
3. If you are using a USB keyboard and it is connected to a USB hub, disconnect the keyboard from the hub and connect it directly to the server.
4. Replace the keyboard.

Mouse does not work.

1. Make sure that:
   - The mouse cable is securely connected to the server.
   - The mouse device drivers are installed correctly.
   - The server and the monitor are turned on.
   - The mouse option is enabled in the Setup utility.
2. If you are using a USB mouse and it is connected to a USB hub, disconnect the mouse from the hub and connect it directly to the server.

3. Replace the mouse.

USB-device does not work.

1. Make sure that:
   - The correct USB device driver is installed.
   - The operating system supports USB devices.
2. Make sure that the USB configuration options are set correctly in system setup.

   Restart the server and press F1 to display the Lenovo XClarity Provisioning Manager system setup interface. Then, click **System Settings → Devices and I/O Ports → USB Configuration**.
3. If you are using a USB hub, disconnect the USB device from the hub and connect it directly to the server.

Optional-device problems

Use this information to solve problems related to optional devices.

- "External USB device not recognized" on page 200
- "PCIe adapter is not recognized or is not functioning" on page 200
- "A Lenovo optional device that worked previously does not work now. " on page 201
- "A Lenovo optional device that was just installed does not work" on page 201
- "A Lenovo optional device that worked previously does not work now. " on page 201

External USB device not recognized

Complete the following steps until the problem is resolved:

1. Make sure that the proper drivers are installed on the compute node. See the product documentation for the USB device for information about device drivers.
2. Use the Setup utility to make sure that the device is configured correctly.
3. If the USB device is plugged into a hub or the console breakout cable, unplug the device and plug it directly into the USB port on the front of the compute node.

PCIe adapter is not recognized or is not functioning

Complete the following steps until the problem is resolved:

1. Check the event log and resolve any issues related to the device.
2. Validate that the device is supported for the server (see https://serverproven.lenovo.com).
3. Make sure that the adapter is installed in a correct slot.
4. Make sure that the proper device drivers are installed for the device.
5. Resolve any resource conflicts if running legacy mode (UEFI).
6. Check http://datacentersupport.lenovo.com for any tech tips (also known as retain tips or service bulletins) that might be related to the adapter.
7. Ensure any adapter external connections are correct and that the connectors are not physically damaged.

Insufficient PCIe resources are detected.

If you see an error message stating "Insufficient PCI Resources Detected," complete the following steps until the problem is resolved:

1. Remove one of the PCIe adapters.

2. Restart the system and press F1 to display the Lenovo XClarity Provisioning Manager system setup interface.
3. Click **UEFI Setup → System Settings → Devices and I/O Ports → MM Config Base**; then, modify the setting to the lower memory capacity. For example, modify 3 GB to 2 GB or modify 2 GB to 1 GB.
4. Save the settings and restart the system.
5. The action for this step will differ based on whether or not the reboot is successful.
   - If the reboot is successful, shut down the solution and reinstall the PCIe card you removed.
   - If the reboot failed, repeat step 2 to step 5.

A Lenovo optional device that was just installed does not work

1. Make sure that:
   - The device is supported for the server (see https://serverproven.lenovo.com).
   - You followed the installation instructions that came with the device and the device is installed correctly.
   - You have not loosened any other installed devices or cables.
   - You updated the configuration information in system setup. When you start a server and press F1 to display the system setup interface. Whenever memory or any other device is changed, you must update the configuration.
2. Reseat the device that you just installed.
3. Replace the device that you just installed.

A Lenovo optional device that worked previously does not work now.

1. Make sure that all of the cable connections for the device are secure.
2. If the device comes with test instructions, use those instructions to test the device.
3. If the failing device is a SCSI device, make sure that:
   - The cables for all external SCSI devices are connected correctly.
   - The last device in each SCSI chain, or the end of the SCSI cable, is terminated correctly.
   - Any external SCSI device is turned on. You must turn on an external SCSI device before you turn on the server.
4. Reseat the failing device.
5. Replace the failing device.

Serial-device problems

Use this information to solve problems with serial ports or devices.

- "Number of displayed serial ports is less than the number of installed serial ports" on page 201
- "Serial device does not work" on page 202

Number of displayed serial ports is less than the number of installed serial ports

Complete the following steps until the problem is solved.

1. Make sure that:
   - Each port is assigned a unique address in the Setup utility and none of the serial ports is disabled.
   - The serial-port adapter (if one is present) is seated correctly.
2. Reseat the serial port adapter.
3. Replace the serial port adapter.

Serial device does not work

1. Make sure that:
   - The device is compatible with the server.
   - The serial port is enabled and is assigned a unique address.
   - The device is connected to the correct connector.
2. Reseat the following components:
   a. Failing serial device.
   b. Serial cable.
3. Replace the following components:
   a. Failing serial device.
   b. Serial cable.
4. (Trained technician only) Replace the system board.

Intermittent problems

Use this information to solve intermittent problems.

- "Intermittent external device problems" on page 202
- "Intermittent KVM problems" on page 202
- "Intermittent unexpected reboots" on page 203

Intermittent external device problems

Complete the following steps until the problem is solved.

1. Make sure that the correct device drivers are installed. See the manufacturer's website for documentation.
2. For a USB device:
   a. Make sure that the device is configured correctly.

      Restart the server and press F1 to display the Lenovo XClarity Provisioning Manager system setup interface. Then, click **System Settings → Devices and I/O Ports → USB Configuration**.
   b. Connect the device to another port. If using a USB hub, remove the hub and connect the device directly to the compute node. Make sure that the device is configured correctly for the port.

Intermittent KVM problems

Complete the following steps until the problem is solved.

Video problems:

1. Make sure that all cables and the console breakout cable are properly connected and secure.
2. Make sure that the monitor is working properly by testing it on another compute node.
3. Test the console breakout cable on a working compute node to ensure that it is operating properly. Replace the console breakout cable if it is defective.

Keyboard problems:

Make sure that all cables and the console breakout cable are properly connected and secure.

Mouse problems:

Make sure that all cables and the console breakout cable are properly connected and secure.

Intermittent unexpected reboots

Note: Some correctable errors require that the server reboot so that it can disable a device, such as a memory DIMM or a processor to allow the machine to boot up properly.

1. If the reset occurs during POST and the POST watchdog timer is enabled, make sure that sufficient time is allowed in the watchdog timeout value (POST Watchdog Timer).

   To check the POST watchdog time, restart the server and press F1 to display the Lenovo XClarity Provisioning Manager system setup interface. Then, click **BMC Settings → POST Watchdog Timer**.
2. If the reset occurs after the operating system starts, disable any automatic server restart (ASR) utilities, such as the Automatic Server Restart IPMI Application for Windows, or any ASR devices that are installed.
3. See the management controller event log to check for an event code that indicates a reboot. See "Event logs" on page 189 for information about viewing the event log.

Power problems

Use this information to resolve issues related to power.

System error LED is on and event log "Power supply has lost input" is displayed

To resolve the problem, ensure that:

1. The power supply is properly connected to a power cord.
2. The power cord is connected to a properly grounded electrical outlet for the server.

Network problems

Use this information to resolve issues related to networking.

- "Cannot wake server using Wake on LAN" on page 203
- "Could not log in using LDAP account with SSL enabled" on page 203

Cannot wake server using Wake on LAN

Complete the following steps until the problem is resolved:

1. If you are using the dual-port network adapter and the server is connected to the network using Ethernet 5 connector, check the event log (see "Event logs" on page 189), make sure that:
   a. Fan 3 is running in standby mode, if Emulex dual port 10GBase-T embedded adapter is installed.
   b. The room temperature is not too high (see "Specifications" on page 4).
   c. The air vents are not blocked.
   d. The air baffle is installed securely.
2. Reseat the dual-port network adapter.
3. Turn off the server and disconnect it from the power source; then, wait 10 seconds before restarting the server.
4. If the problem still remains, replace the dual-port network adapter.

Could not log in using LDAP account with SSL enabled

Complete the following steps until the problem is resolved:

1. Make sure that the license key is valid.
2. Generate a new license key and log in again.

Observable problems

Use this information to solve observable problems.

- "The server immediately displays the POST Event Viewer when it is turned on" on page 204
- "Server is unresponsive (POST is complete and operating system is running)" on page 204
- "Server is unresponsive (cannot press F1 to start System Setup)" on page 205
- "Voltage planar fault is displayed in the event log" on page 205
- "Unusual smell" on page 205
- "Server seems to be running hot" on page 205
- "Cannot enter legacy mode after installing a new adapter" on page 205
- "Cracked parts or cracked chassis" on page 206

The server immediately displays the POST Event Viewer when it is turned on

Complete the following steps until the problem is solved.

1. Make sure that the server supports all the processors and that the processors match in speed and cache size.

   You can view processor details from system setup.

   To determine if the processor is supported for the server, see https://serverproven.lenovo.com.
2. (Trained technician only) Make sure that processor 1 is seated correctly.
3. (Trained technician only) Remove processor 2 and restart the server.
4. Replace the following components one at a time, in the order shown, restarting the server each time:
   a. (Trained technician only) Processor
   b. (Trained technician only) System board

Server is unresponsive (POST is complete and operating system is running)

Complete the following steps until the problem is solved.

- If you are in the same location as the compute node, complete the following steps:
  1. If you are using a KVM connection, make sure that the connection is operating correctly. Otherwise, make sure that the keyboard and mouse are operating correctly.
  2. If possible, log in to the compute node and verify that all applications are running (no applications are hung).
  3. Restart the compute node.
  4. If the problem remains, make sure that any new software has been installed and configured correctly.
  5. Contact your place of purchase of the software or your software provider.
- If you are accessing the compute node from a remote location, complete the following steps:
  1. Make sure that all applications are running (no applications are hung).
  2. Attempt to log out of the system and log back in.
  3. Validate the network access by pinging or running a trace route to the compute node from a command line.
     a. If you are unable to get a response during a ping test, attempt to ping another compute node in the enclosure to determine whether it is a connection problem or compute node problem.
     b. Run a trace route to determine where the connection breaks down. Attempt to resolve a connection issue with either the VPN or the point at which the connection breaks down.

4. Restart the compute node remotely through the management interface.
5. If the problem remains, verify that any new software has been installed and configured correctly.
6. Contact your place of purchase of the software or your software provider.

Server is unresponsive (cannot press F1 to start System Setup)

Configuration changes, such as added devices or adapter firmware updates, and firmware or application code problems can cause the server to fail POST (the power-on self-test).

If this occurs, the server responds in either of the following ways:

- The server restarts automatically and attempts POST again.
- The server hangs, and you must manually restart the server for the server to attempt POST again.

After a specified number of consecutive attempts (automatic or manual), the server to reverts to the default UEFI configuration and starts System Setup so that you can make the necessary corrections to the configuration and restart the server. If the server is unable to successfully complete POST with the default configuration, there might be a problem with the system board.

You can specify the number of consecutive restart attempts in System Setup. Restart the server and press F1 to display the Lenovo XClarity Provisioning Manager system setup interface. Then, click **System Settings → Recovery and RAS → POST Attempts → POST Attempts Limit**. Available options are 3, 6, 9, and disable.

Voltage planar fault is displayed in the event log

Complete the following steps until the problem is solved.

1. Revert the system to the minimum configuration. See "Specifications" on page 4 for the minimally required number of processors and DIMMs.
2. Restart the system.
   - If the system restarts, add each of the items that you removed one at a time, restarting the system each time, until the error occurs. Replace the item for which the error occurs.
   - If the system does not restart, suspect the system board.

Unusual smell

Complete the following steps until the problem is solved.

1. An unusual smell might be coming from newly installed equipment.
2. If the problem remains, contact Lenovo Support.

Server seems to be running hot

Complete the following steps until the problem is solved.

Multiple compute nodes or chassis:

1. Make sure that the room temperature is within the specified range (see "Specifications" on page 4).
2. Check the management processor event log for rising temperature events. If there are no events, the compute node is running within normal operating temperatures. Note that you can expect some variation in temperature.

Cannot enter legacy mode after installing a new adapter

Complete the following procedure to solve the problem.

1. Go to **UEFI Setup → Devices and I/O Ports → Set Option ROM Execution Order**.

2. Move the RAID adapter with operation system installed to the top of the list.
3. Select **Save**.
4. Reboot the system and auto boot to operation system.

Cracked parts or cracked chassis

Contact Lenovo Support.

Software problems

Use this information to solve software problems.

1. To determine whether the problem is caused by the software, make sure that:
   - The server has the minimum memory that is needed to use the software. For memory requirements, see the information that comes with the software.

     Note: If you have just installed an adapter or memory, the server might have a memory-address conflict.
   - The software is designed to operate on the server.
   - Other software works on the server.
   - The software works on another server.
2. If you receive any error messages while you use the software, see the information that comes with the software for a description of the messages and suggested solutions to the problem.
3. Contact your place of purchase of the software.

Chapter 5. PCIe power brake

PCIe power brake (PCIe throttling) quickly reduces the power consumption of high-powered PCIe devices, such as GPU adapters.

Through the text-based Setup Utility or through Lenovo XClarity Provisioning Manager, you can control how the PCIe throttling occurs:

- **Reactive**

  The system performs PCIe throttling when a power supply indicates that a momentary overconsumption or high-temperature warning is occurring. The system also proactively performs PCIe power throttling to thermally protect high-powered PCIe devices from damage in unsupported high-temperature environments.

- **Proactive (default)**

  The system performs PCIe throttling based on the maximum power rating of the installed high-powered PCIe adapters. High-powered PCIe device performance is reduced when the total power from high-powered PCIe devices is greater than one third of the sum of active power supply wattages. Proactive mode also includes the PCIe throttling features of Reactive mode.

- **Disabled**

  The system will not perform PCIe throttling. Proactive thermal protections for unsupported high-temperature environments are limited to those supported by the high-powered PCIe devices.

Important: Momentary power consumption peaks might occur in high-powered PCIe devices, which can cause the instantaneous power to exceed the documented maximum wattage by a factor of 2x or more. Before choosing a power brake mode of Reactive or Disabled, make the change and validate the stability of the system before making the change permanent.

© Copyright Lenovo 2018, 2021

Appendix A. GPU adapter population rules and processor mapping

Use the information in this topic to understand adapter-to-processor mapping and the GPU adapter population order, depending on whether the server has 3-slot expansion cages or 4-slot expansion cages installed.

GPU processor mapping and adapter population rules (3-slot PCIe expansion cage)

Use the information in this topic to understand adapter-to-processor mapping and the GPU adapter population order for adapters in the 3-slot PCIe expansion cage.

Note: PCIe expansion cage 1 and PCIe expansion cage 2 must be the same type, either 4-slot PCIe expansion cages or 3-slot PCIe expansion cages

The following figure illustrates the numbering for the PCIe slots in the server (when 3-slot PCIe expansion cages are installed).

Note: Only double-width full-height, full-length (FHFL) GPUs are supported in the 3-slot PCIe expansion cage.

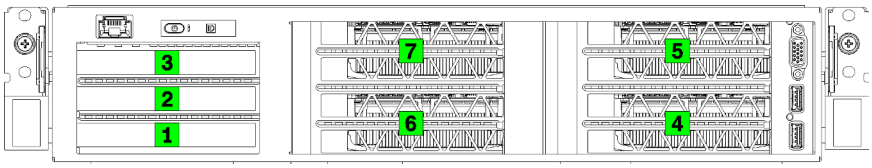

Figure 120. Numbering of the PCIe slots on the server

The following table shows how the PCIe adapter slots are mapped to the system processors.

Table 20. PCIe adapter-to-processor mapping

Adapter slot	Description	Processor mapping
I/O expansion cage		
Slot 1	PCIe 3.0 x16 (full-height, half-length). Typically, a network adapter is installed in this slot.	1
Slot 2	PCIe 3.0 x16 (full-height, half-length). Typically, a RAID adapter or a network adapter is installed in this slot.	2
Slot 3	PCIe 3.0 x4 (full-height, half-length). Typically, a 1GbE network adapter is installed in this slot.	Onboard chipset, also known as the Platform Controller Hub (PCH)
3-slot PCIe expansion cage 1		
Slot 4	PCIe 3.0 x16 for a GPU (full-height, full-length, double-width)	1
Slot 5	PCIe 3.0 x16 for a GPU (full-height, full-length, double-width)	1

© Copyright Lenovo 2018, 2021

Table 20. PCIe adapter-to-processor mapping (continued)

Adapter slot	Description	Processor mapping
3-slot PCIe expansion cage 2		
Slot 6	PCIe 3.0 x16 for a GPU (full-height, full-length, double-width)	2
Slot 7	PCIe 3.0 x16 for a GPU (full-height, full-length, double-width)	2
System board		
Slot 8 (internal)	M.2	Onboard chipset, also known as the Platform Controller Hub (PCH)

The following table defines the population order for the GPU adapters in the PCIe expansion cages 1 and 2.

Table 21. GPU adapter population order

The GPU adapter population order varies depending on adapter-to-processor utilization goals:

- **Concentrated utilization**. Adapters are connected to the PCIe busses from CPU1 until all PCIe busses on CPU1 is consumed before populating adapters against the CPU2 PCI Express busses.
- **Distributed utilization**. Adapters are populated as equally as possible between the CPU1 and CPU2 PCIe Express busses

Number of PCIe adapters	Concentrated	Distributed
1 GPU adapter	Slot 4	Slot 4
2 GPU adapters	Slot 4, slot 5	Slot 4, slot 6
3 GPU adapters	Slot 4, slot 5, slot 6	Slot 4, slot 5, slot 6
4 GPU adapters	Slot 4, slot 5, slot 6, slot 7	Slot 4, slot 5, slot 6, slot 7

GPU processor mapping and adapter population rules (4-slot PCIe expansion cage)

Use the information in this topic to understand adapter-to-processor mapping and the GPU adapter population order for adapters in the 4-slot PCIe expansion cage.

Note: PCIe expansion cage 1 and PCIe expansion cage 2 must be the same type, either 4-slot PCIe expansion cages or 3-slot PCIe expansion cages

The following figure illustrates the numbering for the PCIe slots in the server (when 4-slot PCIe expansion cages are installed).

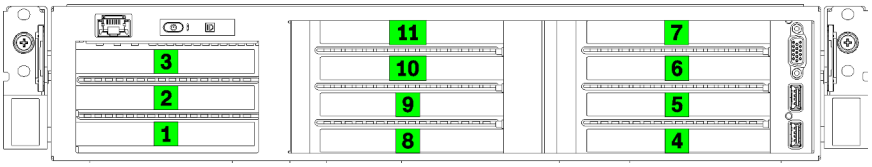

Figure 121. Numbering of the PCIe slots on the server (4-slot PCIe expansion cage)

The following table shows how the PCIe adapter slots are mapped to the system processors.

Table 22. PCIe adapter-to-processor mapping

Adapter slot	Description	Processor mapping
I/O expansion cage		
Slot 1	PCIe 3.0 x16 (full-height, half-length). Typically, a network adapter is installed in this slot.	1
Slot 2	PCIe 3.0 x16 (full-height, half-length). Typically, a RAID adapter or a network adapter is installed in this slot.	2
Slot 3	PCIe 3.0 x4 (full-height, half-length). Typically, a 1GbE network adapter is installed in this slot.	Onboard chipset, also known as the Platform Controller Hub (PCH)
4-slot PCIe expansion cage 1		
Slot 4 *	PCIe 3.0 x16 for a GPU (full-height, half-length, single-width)	1
Slot 5 *	PCIe 3.0 x16 for a GPU (full-height, half-length, single-width)	1
Slot 6 *	PCIe 3.0 x16 for a GPU (full-height, half-length, single-width)	1
Slot 7 *	PCIe 3.0 x16 for a GPU (full-height, half-length, single-width)	1
4-slot PCIe expansion cage 2		
Slot 8 *	PCIe 3.0 x16 for a GPU (full-height, half-length, single-width)	2
Slot 9 *	PCIe 3.0 x16 for a GPU (full-height, half-length, single-width)	2
Slot 10 *	PCIe 3.0 x16 for a GPU (full-height, half-length, single-width)	2
Slot 11 *	PCIe 3.0 x16 for a GPU (full-height, half-length, single-width)	2
System board		
Slot 12 (internal)	M.2	Onboard chipset, also known as the Platform Controller Hub (PCH)

Note: * Slots 4 through 11 operate in x8 mode. If an x16 adapter is installed in one of these slots, the adatper will function as a x8 adapter in these slots.

The following table defines the population order for the GPU adapters in the PCIe expansion cages 1 and 2.

Table 23. GPU adapter population order

The GPU adapter population order varies depending on adapter-to-processor utilization goals:

- **Concentrated utilization**. Adapters are connected to the PCIe busses from CPU1 until all PCIe busses on CPU1 is consumed before populating adapters against the CPU2 PCI Express busses.
- **Distributed utilization**. Adapters are populated as equally as possible between the CPU1 and CPU2 PCIe Express busses

Table 23. GPU adapter population order (continued)

Number of PCIe adapters	Concentrated	Distributed
1 GPU adapter	Slot 4	Slot 4
2 GPU adapters	Slot 4, slot 5	Slot 4, slot 8
3 GPU adapters	Slot 4, slot 5, slot 6	Slot 4, slot 5, slot 8
4 GPU adapters	Slot 4, slot 5, slot 6, slot 7	Slot 4, slot 5, slot 8, slot 9
5 GPU adapters	Slot 4, slot 5, slot 6, slot 7, slot 8	Slot 4, slot 5, slot 6, slot 8, slot 9
6 GPU adapters	Slot 4, slot 5, slot 6, slot 7, slot 8, slot 9	Slot 4, slot 5, slot 6, slot 8, slot 9, slot 10
7 GPU adapters	Slot 4, slot 5, slot 6, slot 7, slot 8, slot 9, slot 10	Slot 4, slot 5, slot 6, slot 7, slot 8, slot 9, slot 10
8 GPU adapters	Slot 4, slot 5, slot 6, slot 7, slot 8, slot 9, slot 10, slot 11	Slot 4, slot 5, slot 6, slot 7, slot 8, slot 9, slot 10, slot 11

Appendix B. Getting help and technical assistance

If you need help, service, or technical assistance or just want more information about Lenovo products, you will find a wide variety of sources available from Lenovo to assist you.

On the World Wide Web, up-to-date information about Lenovo systems, optional devices, services, and support are available at:

http://datacentersupport.lenovo.com

Note: IBM is Lenovo's preferred service provider for ThinkSystem.

Before you call

Before you call, there are several steps that you can take to try and solve the problem yourself. If you decide that you do need to call for assistance, gather the information that will be needed by the service technician to more quickly resolve your problem.

Attempt to resolve the problem yourself

You can solve many problems without outside assistance by following the troubleshooting procedures that Lenovo provides in the online help or in the Lenovo product documentation. The Lenovo product documentation also describes the diagnostic tests that you can perform. The documentation for most systems, operating systems, and programs contains troubleshooting procedures and explanations of error messages and error codes. If you suspect a software problem, see the documentation for the operating system or program.

You can find the product documentation for your ThinkSystem products at https://pubs.lenovo.com/

You can take these steps to try to solve the problem yourself:

- Check all cables to make sure that they are connected.
- Check the power switches to make sure that the system and any optional devices are turned on.
- Check for updated software, firmware, and operating-system device drivers for your Lenovo product. The Lenovo Warranty terms and conditions state that you, the owner of the Lenovo product, are responsible for maintaining and updating all software and firmware for the product (unless it is covered by an additional maintenance contract). Your service technician will request that you upgrade your software and firmware if the problem has a documented solution within a software upgrade.
- If you have installed new hardware or software in your environment, check https://serverproven.lenovo.com to make sure that the hardware and software are supported by your product.
- Go to http://datacentersupport.lenovo.com and check for information to help you solve the problem.
  - Check the Lenovo forums at https://forums.lenovo.com/t5/Datacenter-Systems/ct-p/sv_eg to see if someone else has encountered a similar problem.

Gathering information needed to call Support

If you require warranty service for your Lenovo product, the service technicians will be able to assist you more efficiently if you prepare the appropriate information before you call. You can also go to http://datacentersupport.lenovo.com/warrantylookup for more information about your product warranty.

© Copyright Lenovo 2018, 2021

Gather the following information to provide to the service technician. This data will help the service technician quickly provide a solution to your problem and ensure that you receive the level of service for which you might have contracted.

- Hardware and Software Maintenance agreement contract numbers, if applicable
- Machine type number (Lenovo 4-digit machine identifier)
- Model number
- Serial number
- Current system UEFI and firmware levels
- Other pertinent information such as error messages and logs

As an alternative to calling Lenovo Support, you can go to https://support.lenovo.com/servicerequest to submit an Electronic Service Request. Submitting an Electronic Service Request will start the process of determining a solution to your problem by making the pertinent information available to the service technicians. The Lenovo service technicians can start working on your solution as soon as you have completed and submitted an Electronic Service Request.

Collecting service data

To clearly identify the root cause of a server issue or at the request of Lenovo Support, you might need collect service data that can be used for further analysis. Service data includes information such as event logs and hardware inventory.

Service data can be collected through the following tools:

- **Lenovo XClarity Provisioning Manager**

  Use the Collect Service Data function of Lenovo XClarity Provisioning Manager to collect system service data. You can collect existing system log data or run a new diagnostic to collect new data.

- **Lenovo XClarity Controller**

  You can use the Lenovo XClarity Controller web interface or the CLI to collect service data for the server. The file can be saved and sent to Lenovo Support.

  – For more information about using the web interface to collect service data, see the “Downloading service data” section in the XCC documentation version compatible with your server at https://pubs.lenovo.com/lxcc-overview/.

  – For more information about using the CLI to collect service data, see the “ffdc command” section in the XCC documentation version compatible with your server at https://pubs.lenovo.com/lxcc-overview/.

- **Lenovo XClarity Administrator**

  Lenovo XClarity Administrator can be set up to collect and send diagnostic files automatically to Lenovo Support when certain serviceable events occur in Lenovo XClarity Administrator and the managed endpoints. You can choose to send diagnostic files to Lenovo Support using Call Home or to another service provider using SFTP. You can also manually collect diagnostic files, open a problem record, and send diagnostic files to the Lenovo Support Center.

  You can find more information about setting up automatic problem notification within the Lenovo XClarity Administrator at https://pubs.lenovo.com/lxca/admin_setupcallhome.

- **Lenovo XClarity Essentials OneCLI**

  Lenovo XClarity Essentials OneCLI has inventory application to collect service data. It can run both in-band and out-of-band. When running in-band within the host operating system on the server, OneCLI can collect information about the operating system, such as the operating system event log, in addition to the hardware service data.

To obtain service data, you can run the `getinfor` command. For more information about running the `getinfor`, see https://pubs.lenovo.com/lxce-onecli/onecli_r_getinfor_command.

Contacting Support

You can contact Support to obtain help for your issue.

You can receive hardware service through a Lenovo Authorized Service Provider. To locate a service provider authorized by Lenovo to provide warranty service, go to https://datacentersupport.lenovo.com/serviceprovider and use filter searching for different countries. For Lenovo support telephone numbers, see https://datacentersupport.lenovo.com/supportphonelist for your region support details.

Appendix C. Notices

Lenovo may not offer the products, services, or features discussed in this document in all countries. Consult your local Lenovo representative for information on the products and services currently available in your area.

Any reference to a Lenovo product, program, or service is not intended to state or imply that only that Lenovo product, program, or service may be used. Any functionally equivalent product, program, or service that does not infringe any Lenovo intellectual property right may be used instead. However, it is the user's responsibility to evaluate and verify the operation of any other product, program, or service.

Lenovo may have patents or pending patent applications covering subject matter described in this document. The furnishing of this document is not an offer and does not provide a license under any patents or patent applications. You can send inquiries in writing to the following:

Lenovo (United States), Inc.
8001 Development Drive
Morrisville, NC 27560
U.S.A.
Attention: Lenovo Director of Licensing

LENOVO PROVIDES THIS PUBLICATION “AS IS” WITHOUT WARRANTY OF ANY KIND, EITHER EXPRESS OR IMPLIED, INCLUDING, BUT NOT LIMITED TO, THE IMPLIED WARRANTIES OF NON-INFRINGEMENT, MERCHANTABILITY OR FITNESS FOR A PARTICULAR PURPOSE. Some jurisdictions do not allow disclaimer of express or implied warranties in certain transactions, therefore, this statement may not apply to you.

This information could include technical inaccuracies or typographical errors. Changes are periodically made to the information herein; these changes will be incorporated in new editions of the publication. Lenovo may make improvements and/or changes in the product(s) and/or the program(s) described in this publication at any time without notice.

The products described in this document are not intended for use in implantation or other life support applications where malfunction may result in injury or death to persons. The information contained in this document does not affect or change Lenovo product specifications or warranties. Nothing in this document shall operate as an express or implied license or indemnity under the intellectual property rights of Lenovo or third parties. All information contained in this document was obtained in specific environments and is presented as an illustration. The result obtained in other operating environments may vary.

Lenovo may use or distribute any of the information you supply in any way it believes appropriate without incurring any obligation to you.

Any references in this publication to non-Lenovo Web sites are provided for convenience only and do not in any manner serve as an endorsement of those Web sites. The materials at those Web sites are not part of the materials for this Lenovo product, and use of those Web sites is at your own risk.

Any performance data contained herein was determined in a controlled environment. Therefore, the result obtained in other operating environments may vary significantly. Some measurements may have been made on development-level systems and there is no guarantee that these measurements will be the same on generally available systems. Furthermore, some measurements may have been estimated through extrapolation. Actual results may vary. Users of this document should verify the applicable data for their specific environment.

© Copyright Lenovo 2018, 2021

Trademarks

LENOVO, THINKSYSTEM, Flex System, System x, NeXtScale System, and x Architecture are trademarks of Lenovo.

Intel and Intel Xeon are trademarks of Intel Corporation in the United States, other countries, or both.

Internet Explorer, Microsoft, and Windows are trademarks of the Microsoft group of companies.

Linux is a registered trademark of Linus Torvalds.

All other trademarks are the property of their respective owners. © 2018 Lenovo.

Important notes

Processor speed indicates the internal clock speed of the microprocessor; other factors also affect application performance.

CD or DVD drive speed is the variable read rate. Actual speeds vary and are often less than the possible maximum.

When referring to processor storage, real and virtual storage, or channel volume, KB stands for 1 024 bytes, MB stands for 1 048 576 bytes, and GB stands for 1 073 741 824 bytes.

When referring to hard disk drive capacity or communications volume, MB stands for 1 000 000 bytes, and GB stands for 1 000 000 000 bytes. Total user-accessible capacity can vary depending on operating environments.

Maximum internal hard disk drive capacities assume the replacement of any standard hard disk drives and population of all hard-disk-drive bays with the largest currently supported drives that are available from Lenovo.

Maximum memory might require replacement of the standard memory with an optional memory module.

Each solid-state memory cell has an intrinsic, finite number of write cycles that the cell can incur. Therefore, a solid-state device has a maximum number of write cycles that it can be subjected to, expressed as `total bytes written` (TBW). A device that has exceeded this limit might fail to respond to system-generated commands or might be incapable of being written to. Lenovo is not responsible for replacement of a device that has exceeded its maximum guaranteed number of program/erase cycles, as documented in the Official Published Specifications for the device.

Lenovo makes no representations or warranties with respect to non-Lenovo products. Support (if any) for the non-Lenovo products is provided by the third party, not Lenovo.

Some software might differ from its retail version (if available) and might not include user manuals or all program functionality.

Telecommunication regulatory statement

This product may not be certified in your country for connection by any means whatsoever to interfaces of public telecommunications networks. Further certification may be required by law prior to making any such connection. Contact a Lenovo representative or reseller for any questions.

Electronic emission notices

When you attach a monitor to the equipment, you must use the designated monitor cable and any interference suppression devices that are supplied with the monitor.

Additional electronic emissions notices are available at:

https://pubs.lenovo.com/important_notices/

Taiwan BSMI RoHS declaration

單元 Unit	限用物質及其化學符號 Restricted substances and its chemical symbols					
	鉛Lead (Pb)	汞Mercury (Hg)	鎘Cadmium (Cd)	六價鉻 Hexavalent chromium (Cr^{+6})	多溴聯苯 Polybrominated biphenyls (PBB)	多溴二苯醚 Polybrominated diphenyl ethers (PBDE)
機架	○	○	○	○	○	○
外部蓋板	○	○	○	○	○	○
機械組合件	–	○	○	○	○	○
空氣傳動設備	–	○	○	○	○	○
冷卻組合件	–	○	○	○	○	○
內存模塊	–	○	○	○	○	○
處理器模塊	–	○	○	○	○	○
電纜組合件	–	○	○	○	○	○
電源	–	○	○	○	○	○
儲備設備	–	○	○	○	○	○
電路卡	–	○	○	○	○	○
光碟機	–	○	○	○	○	○
雷射器	–	○	○	○	○	○

備考1. 〝超出0.1 wt %〞及〝超出0.01 wt %〞係指限用物質之百分比含量超出百分比含量基準值。

Note1 : "exceeding 0.1wt%" and "exceeding 0.01 wt%" indicate that the percentage content of the restricted substance exceeds the reference percentage value of presence condition.

備考2. 〝○〞係指該項限用物質之百分比含量未超出百分比含量基準值。

Note2 : "○"indicates that the percentage content of the restricted substance does not exceed the percentage of reference value of presence.

備考3. 〝 - 〞係指該項限用物質為排除項目。

Note3 : The "-" indicates that the restricted substance corresponds to the exemption.

Taiwan import and export contact information

Contacts are available for Taiwan import and export information.

委製商/進口商名稱: 台灣聯想環球科技股份有限公司
進口商地址: 台北市南港區三重路 66 號 8 樓
進口商電話: 0800-000-702

Index

2.5-inch-drive backplane
installing 141

A

air baffle
installing 72
removing 71
replacing 70
AMD Radeon Instinct MI25
replacing 127
an AMD Radeon Instinct MI25 GPU adapter
installing 130
assert
physical presence 185

B

backplane
installing 141
removing 139
backplane, hard drive
replacing 139

C

cable routing
3-slot PCIe expansion cage 1 35
3-slot PCIe expansion cage 2 44
4-slot PCIe expansion cage 1 38
4-slot PCIe expansion cage 2 47
drive, onboard RAID controller 50
fan cage 57
I/O expansion cage 31
RAID adapter 53
video and USB cables 41
CMOS battery
replacing 149
collecting service data 214
contamination, particulate and gaseous 8
cover
installing 69
removing 67
replacing 67
CPU
installing 172
removing 169
replacing 169
creating a personalized support web page 213
custom support web page 213

D

devices, static-sensitive
handling 64
dimm
install 74
DIMM
installing 77
removing 73
replacing 73
DIMM installation order 75
drive activity LED 15
drive cage
installing 138
removing 137
replacing 137
drive status LED 15
drive, SATA
cable routing 50

E

enable
TPM 183
Ethernet
controller
troubleshooting 191
Ethernet controller problems
solving 191
expansion cage card
installing 135
removing 133
replacing 133

F

fan
cable routing 57
installing 80
removing 79
replacing 79
fan cage
cable routing 57
firmware updates 9
front I/O assembly 15
front operator panel
replacing 108
front view 15

G

gaseous contamination 8
Getting help 213
GPU
replacing 120
GPU adapter
removing 127
GPU adapter (FHFL)
installing 123
removing 120
GPU adapter (FHHL)
installing 125
removing 122
GPU adapter population rules 209
GPU expansion cage
installing 89, 116
removing 113
GPU performance problems 197
GPU-to-processor mapping 209
graphic processing unit
installing 130
removing 127
graphic processing unit (FHFL)
installing 123
removing 120
graphic processing unit (FHHL)

© Copyright Lenovo 2018, 2021

installing 125
removing 122
guidelines
options installation 63
system reliability 64

H

handling static-sensitive devices 64
hard disk drive
replacing 142
hard disk drive problems 195
hard disk drives
removing 142
hard drive backplane
replacing 139
hard drive cage
installing 138
removing 137
replacing 137
hard drive, SAS
cable routing 53
hard-drive backplane
removing 139
hardware service and support telephone numbers 215
heat sink
installing 172
removing 169
replacing 169
help 213
hot-swap drive
installing 143
hot-swap power supply
installing 160
removing 156
replacing 156

I

ID label 1
important notices 218
install
dimm 74
memory 74
installation
guidelines 63
installation guidelines 63
installing
air baffle 72
an AMD Radeon Instinct MI25 GPU adapter 130
backplane 141
CPU 172
DIMM 77
drive cage 138
expansion cage card 135
FHFL GPU adapter 123
FHHL GPU adapter 125
GPU expansion cage 89, 116
graphic processing unit 130
graphic processing unit (FHFL) 123
graphic processing unit (FHHL) 125
heat sink 172
hot-swap drive 143
hot-swap power supply 160
I/O expansion cage 89
M.2 backplane and M.2 drive 146
management port 112
microprocessor 172
microprocessor heat sink module 172
operator panel 109
PCIe expansion cage 116
PHM 172
processor 172
processor-heat-sink module 172
rack mounting bracket 168
serial port 154
shipping bracket 66
system battery 151
system board 179
system fan 80
system fan cage 84
top cover 69
TPM card 165
insufficient PCIe resource
solving 200
intermittent problems 202
internal cable routing 27
internal cable routing guides 28
introduction 1–2
I/O expansion cage
installing 89
replacing 86
I/O riser cage
removing 86

J

jumper 24

K

keyboard problems 199

M

M.2 backplane and M.2 drive
installing 146
removing 144
replacing 144
management port
installing 112
removing 111
management port module
replacing 110
memory
install 74
problems 194
UDIMM 74
memory module installation order 75
microprocessor
installing 172
removing 169
replacing 169
microprocessor heat sink module
installing 172
removing 169
replacing 169
monitor problems 198
mouse problems 199

N

network
problems 203
network access label 1–2
notes, important 218
notices 217

O

observable problems 204
operator panel
  installing 109
  removing 108
optional-device problems 200

P

particulate contamination 8
parts list 58
PCIe
  troubleshooting 200
PCIe adapter
  replacing 91
PCIe cabling problems 197
PCIe expansion cage
  installing 116
  removing 113
  replacing 113
PHM
  installing 172
  removing 169
  replacing 169
physical presence 185
power
  problems 203
power cords 62, 207, 209–210
power off the server 13
power on the server 12
power problems 191
problem determination 189
problems
  Ethernet controller 191
  GPU performance 197
  hard disk drive 195
  intermittent 202
  keyboard 199
  memory 194
  monitor 198
  mouse 199
  network 203
  observable 204
  optional devices 200
  PCIe 200
  PCIe cabling 197
  power 191, 203
  power on and power off 192
  serial-device 201
  software 206
  USB device 199
  video 198
processor
  installing 172
  removing 169
  replacing 169
processor heat sink module
  replacing 169
processor mapping (GPU)t 209
processor-heat-sink module
  installing 172
  removing 169
pull-out information tab 15

Q

QR code 3
quick response code 3

R

rack latch 15
  replacing 167
rack mounting bracket
  installing 168
  removing 66, 167
RAID adapter
  replacing 95
rear view 20
rear view LED 21
removing
  air baffle 71
  backplane 139
  CPU 169
  DIMM 73
  drive cage 137
  expansion cage card 133
  FHFL GPU adapter 120
  FHHL GPU adapter 122
  GPU adapter 127
  GPU expansion cage 113
  graphic processing unit 127
  graphic processing unit (FHFL) 120
  graphic processing unit (FHHL) 122
  hard disk drives 142
  heat sink 169
  hot-swap power supply 156
  I/O riser cage 86
  M.2 backplane and M.2 drive 144
  management port 111
  microprocessor 169
  microprocessor heat sink module 169
  operator panel 108
  PCIe expansion cage 113
  PHM 169
  processor 169
  processor-heat-sink module 169
  rack mounting bracket 66, 167
  serial port 153
  system battery 149
  system board 177
  system fan 79
  system fan cage 81
  top cover 67
  TPM card 163
replacing
  air baffle 70
  AMD Radeon Instinct MI25 GPU 127
  CMOS battery 149
  CPU 169
  DIMM 73
  drive cage 137
  expansion cage card 133
  front operator panel 108
  GPU 120
  graphics processing unit 120, 127
  hard disk drive 142
  hard drive backplane 139
  heat sink 169
  hot-swap power supply 156
  I/O expansion cage 86
  M.2 backplane and M.2 drive 144
  management port module 110
  microprocessor 169
  microprocessor heat sink module 169
  PCIe adapter 91
  PCIe expansion cage 113
  PHM 169
  processor 169
  processor heat sink module 169
  rack latch 167
  RAID adapter 95
  serial port 153
  shipping bracket 66

© Copyright Lenovo 2018, 2021

supercapacitor (supercap) 100
system board 177
system fan 79
system fan cage 81
top cover 67
TPM card 163
retainer on M.2 backplane
adjusting 146

S

safety iii
safety inspection checklist iv
SAS drive
cable routing 53
SATA drive
cable routing 50
Secure Boot 186
security advisories 12
serial number 181
serial port
installing 154
removing 153
replacing 153
serial-device problems 201
server components 15
server power on or power off problems 192
service and support
before you call 213
hardware 215
software 215
service data 214
shipping bracket
installing 66
replacing 66
software 18
software problems 206
software service and support telephone numbers 215
solving
Ethernet controller problems 191
insufficient PCIe resource 200
solving power problems 191
static-sensitive devices
handling 64
supercapacitor (supercap)
replacing 100
support web page, custom 213
switch blocks 25
system battery
installing 151
removing 149
system board
installing 179
removing 177
replacing 177
system board components 22
system fan
installing 80
removing 79
replacing 79
system fan cage
installing 84
removing 81
replacing 81
system reliability guidelines 64

T

Taiwan BSMI RoHS declaration 219
Taiwan import and export contact information 219
Tech Tips 12
telecommunication regulatory statement 218
telephone numbers 215
top cover
installing 69
removing 67
replacing 67
TPM 183
TPM 2.0 185
TPM card
installing 165
removing 163
replacing 163
TPM version 185
trademarks 218
troubleshooting 198, 200, 206
by symptom 192
GPU performance problems 197
hard disk drive problems 195
intermittent problems 202
keyboard problems 199
memory problems 194
mouse problems 199
network problems 203
observable problems 204
PCIe cabling problems 197
power on and power off problems 192
power problems 203
serial-device problems 201
symptoms-based troubleshooting 192
USB-device problems 199
video 198
Trusted Platform Module 183

U

UDIMM
requirement 74
UEFI Secure Boot 186
Unbuffered DIMM 74
update firmware 9
updating,
machine type 181
USB-device problems 199

V

VGA connector 15
video problems 198

W

warranty 1

Lenovo