Lenovo

ThinkSystem SR850
Maintenance Manual

Machine Types: 7X18 and 7X19

Note

Before using this information and the product it supports, be sure to read and understand the safety information and the safety instructions, which are available at:https://pubs.lenovo.com/safety_documentation/

In addition, be sure that you are familiar with the terms and conditions of the Lenovo warranty for your server, which can be found at:
http://datacentersupport.lenovo.com/warrantylookup

Thirtieth Edition (November 2023)

© Copyright Lenovo 2017, 2023.
LIMITED AND RESTRICTED RIGHTS NOTICE: If data or software is delivered pursuant to a General Services Administration (GSA) contract, use, reproduction, or disclosure is subject to restrictions set forth in Contract No. GS-35F-05925.

Contents

Contents i

Safety iii

Safety inspection checklist iv

Chapter 1. Introduction 1

Specifications 1

Particulate contamination 5

Firmware updates 6

Tech Tips 10

Security advisories 10

Power on the server 10

Power off the server 11

Chapter 2. Server components 13

Front view 13

Front operator panel 16

Front operator panel with LCD display 16

Rear view 21

System-board connectors. 25

Switches, jumpers, and buttons 26

System-board LEDs 27

Optional processor and memory expansion tray . . 28

PCIe riser-cards. 31

2.5-inch drive backplanes 32

RAID adapters 33

Internal cable routing. 34

Cable routing for 2.5-inch drives 34

Parts list. 49

Power cords 53

Chapter 3. Hardware replacement procedures 55

Installation Guidelines 55

System reliability guidelines 56

Working inside the server with the power on . . 57

Handling static-sensitive devices 57

2.5-inch hot-swap drive and drive backplane replacement 58

Remove a drive backplane. 58

Install a drive backplane. 59

Remove a 2.5-inch hot-swap drive 59

Install a 2.5-inch hot-swap drive 60

CMOS battery (CR2032) replacement 61

Remove the CMOS battery (CR2032) 61

Install the CMOS battery (CR2032) 64

Fan and fan cage replacement 65

Remove the fan cage assembly 65

Install the fan cage assembly 67

Remove a hot-swap fan 68

Install a hot-swap fan 69

Front VGA assembly replacement 70

Remove the front VGA assembly 71

Install the front VGA assembly 73

LOM adapter replacement 75

Remove the LOM adapter 75

Install the LOM adapter 77

M.2 drive and backplane replacement 78

How to adjust the position of the retainer on the M.2 backplane 78

Remove the M.2 backplane 79

Install the M.2 backplane 80

Remove an M.2 drive from the M.2 backplane 82

Install an M.2 drive in the M.2 backplane . . . 82

Memory module replacement 84

Remove a memory module 84

Install a memory module 86

Operator panel tray assembly and front operator panel replacement. 88

Remove the operator panel tray assembly. . . 89

Install the operator panel tray assembly. . . . 90

Remove the front operator panel 92

Install the front operator panel 93

PCIe riser-card assembly and adapter replacement 93

Remove the PCIe riser-card assembly 93

Install the PCIe riser-card assembly 96

Remove an adapter 98

Install an adapter 99

Power supply unit replacement. 101

Remove a hot-swap power supply unit 101

Install a hot-swap power supply unit 105

Processor and heat sink replacement 110

Remove a processor and heat sink 110

Install a processor and heat sink 114

Processor and memory expansion tray replacement 119

Remove the processor and memory expansion tray 120

Install the processor and memory expansion tray 122

Security bezel replacement 124

Remove the security bezel 124

© Copyright Lenovo 2017, 2023

Install the security bezel 125
System board air baffle and the power interposer replacement 126
Remove the system board air baffle and the power interposer 126
Install the system board air baffle and the power interposer 128
System board replacement 130
Remove the system board 130
Install the system board 132
Update the machine type and serial number 134
Enable TPM/TCM 136
Enable UEFI Secure Boot 139
TCM/TPM adapter replacement 140
Remove the TCM/TPM adapter (for Chinese Mainland only) 140
Install the TCM/TPM adapter (for Chinese Mainland only) 142
Top cover replacement 144
Remove the top cover 145
Install the top cover 146
Complete the parts replacement 147

Chapter 4. Problem determination 149

Event logs 149
Light path diagnostics 150
Power supply LEDs 151
System-board LEDs 154
General problem determination procedures 155
Resolving suspected power problems 155
Resolving suspected Ethernet controller problems 156
Troubleshooting by symptom 157
Hard disk drive problems 157
Fan problems 159
Intermittent problems 159
Keyboard, mouse, KVM switch or USB-device problems 160
Memory problems 161
Monitor and video problems 163
Network problems 165
Observable problems 165
Optional-device problems 167
Power on and power off problems 169
Processor problems 171
Serial-device problems 171
Software problems 172

Appendix A. Hardware disassembling for recycle 173

Disassemble the system board for recycle 173
Disassemble the processor and memory expansion tray for recycle 174
Disassemble the server for chassis recycle 175

Appendix B. Getting help and technical assistance 177

Before you call 177
Collecting service data 178
Contacting Support 179

Appendix C. Notices 181

Trademarks 182
Important notes 182
Telecommunication regulatory statement 182
Electronic emission notices 183
Taiwan Region BSMI RoHS declaration 183
Taiwan Region import and export contact information 184

Index 185

Safety

Before installing this product, read the Safety Information.

قبل تركيب هذا المنتج، يجب قراءة الملاحظات الآمنية

Antes de instalar este produto, leia as Informações de Segurança.

在安装本产品之前，请仔细阅读 Safety Information
(安全信息)。

安裝本產品之前，請先閱讀「安全資訊」。

Prije instalacije ovog produkta obavezno pročitajte Sigurnosne Upute.

Před instalací tohoto produktu si přečtěte příručku bezpečnostních instrukcí.

Læs sikkerhedsforskrifterne, før du installerer dette produkt.

Lees voordat u dit product installeert eerst de veiligheidsvoorschriften.

Ennen kuin asennat tämän tuotteen, lue turvaohjeet kohdasta Safety Information.

Avant d'installer ce produit, lisez les consignes de sécurité.

Vor der Installation dieses Produkts die Sicherheitshinweise lesen.

Πριν εγκαταστήσετε το προϊόν αυτό, διαβάστε τις πληροφορίες ασφάλειας
(safety information).

.לפני שתתקינו מוצר זה, קראו את הוראות הבטיחות

A termék telepítése előtt olvassa el a Biztonsági előírásokat!

Prima di installare questo prodotto, leggere le Informazioni sulla Sicurezza.

製品の設置の前に、安全情報をお読みください。

본 제품을 설치하기 전에 안전 정보를 읽으십시오.

Пред да се инсталира овој продукт, прочитајте информацијата за безбедност.

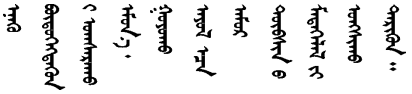

Les sikkerhetsinformasjonen (Safety Information) før du installerer dette produktet.

Przed zainstalowaniem tego produktu, należy zapoznać się
z książką "Informacje dotyczące bezpieczeństwa" (Safety Information).

Antes de instalar este produto, leia as Informações sobre Segurança.

© Copyright Lenovo 2017, 2023

Перед установкой продукта прочтите инструкции по технике безопасности.

Pred inštaláciou tohto zariadenia si pečítaje Bezpečnostné predpisy.

Pred namestitvijo tega proizvoda preberite Varnostne informacije.

Antes de instalar este producto, lea la información de seguridad.

Läs säkerhetsinformationen innan du installerar den här produkten.

ཐོན་རྫས་འདི་བདེ་སྒྲིད་མ་བྱས་གོང་། ་སྐོར་གྱི་ཡིད་གཟབ་བྱ་འདྲ་མིན་ཡོད་པའི་འོད་སྣེར་བལྟ་དགོས།

Bu ürünü kurmadan önce güvenlik bilgilerini okuyun.

مەزكۇر مەھسۇلاتنى ئورنىتىشتىن بۇرۇن بىخەتەرلىك ئۇچۇرلىرىنى ئوقۇپ چىقىڭ.

Youq mwngz yungh canjbinj neix gaxgonq, itdingh aeu doeg aen canjbinj soengq cungj vahgangj ancien siusik.

Safety inspection checklist

Use the information in this section to identify potentially unsafe conditions with your server. As each machine was designed and built, required safety items were installed to protect users and service technicians from injury.

Notes:

1. The product is not suitable for use at visual display workplaces according to §2 of the Workplace Regulations.
2. The set-up of the server is made in the server room only.

CAUTION:
This equipment must be installed or serviced by trained personnel, as defined by the NEC, IEC 62368-1 & IEC 60950-1, the standard for Safety of Electronic Equipment within the Field of Audio/Video, Information Technology and Communication Technology. Lenovo assumes you are qualified in the servicing of equipment and trained in recognizing hazards energy levels in products. Access to the equipment is by the use of a tool, lock and key, or other means of security, and is controlled by the authority responsible for the location.

Important: Electrical grounding of the server is required for operator safety and correct system function. Proper grounding of the electrical outlet can be verified by a certified electrician.

Use the following checklist to verify that there are no potentially unsafe conditions:

1. Make sure that the power is off and the power cord is disconnected.
2. Check the power cord.
   - Make sure that the third-wire ground connector is in good condition. Use a meter to measure third-wire ground continuity for 0.1 ohm or less between the external ground pin and the frame ground.
   - Make sure that the power cord is the correct type.

     To view the power cords that are available for the server:

     a. Go to:

http://dcsc.lenovo.com/#/

b. Click **Preconfigured Model** or **Configure to order**.

c. Enter the machine type and model for your server to display the configurator page.

d. Click **Power → Power Cables** to see all line cords.

- Make sure that the insulation is not frayed or worn.

3. Check for any obvious non-Lenovo alterations. Use good judgment as to the safety of any non-Lenovo alterations.
4. Check inside the server for any obvious unsafe conditions, such as metal filings, contamination, water or other liquid, or signs of fire or smoke damage.
5. Check for worn, frayed, or pinched cables.
6. Make sure that the power-supply cover fasteners (screws or rivets) have not been removed or tampered with.

© Copyright Lenovo 2017, 2023

Chapter 1. Introduction

The ThinkSystem SR850 is a 2U rack server designed for high-volume network transaction processing. This high-performance, multi-core server is ideally suited for networking environments that require superior processor performance, input/output (I/O) flexibility, and high manageability.

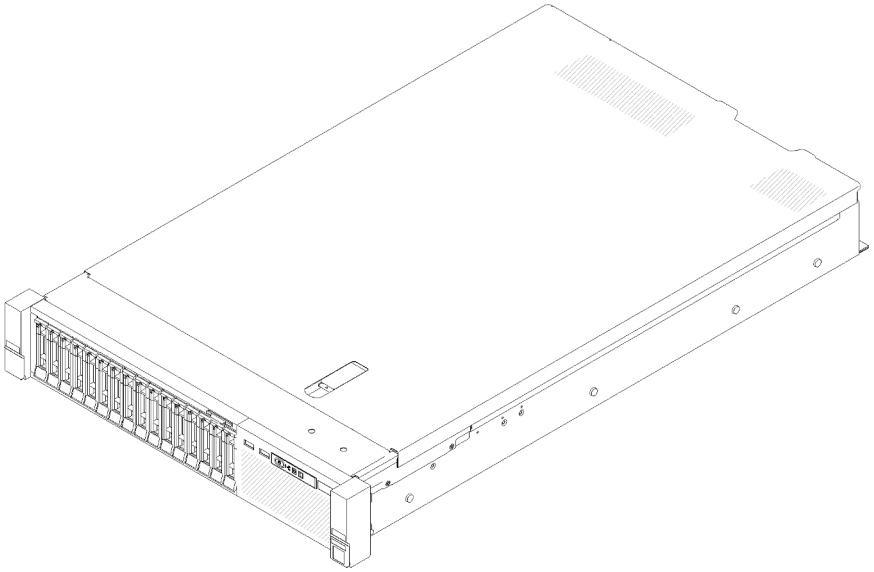

Figure 1. ThinkSystem SR850

The server comes with a limited warranty. For details about the warranty, see: https://support.lenovo.com/us/en/solutions/ht503310

For details about your specific warranty, see: http://datacentersupport.lenovo.com/warrantylookup

Specifications

The following information is a summary of the features and specifications of the server. Depending on the model, some features might not be available, or some specifications might not apply.

Table 1. Specifications, Type 7X18 and 7X19

Specification	Description
Dimension	2U server • Height: 86.5 mm (3.4 inches) • Width: – With rack handles: 482 mm (19.0 inches) – Without rack handles: 444.6 mm (17.5 inches) • Depth: 763.7 mm (30.1 inches) **Note:** The depth is measured with rack handles installed, but without the security bezel installed.
Weight (depending on the configuration)	27.0 kg (59.6 lb) in maximum.

© Copyright Lenovo 2017, 2023

Table 1. Specifications, Type 7X18 and 7X19 (continued)

Processor (depending on model)	Supports multi-core Intel Xeon processors, with integrated memory controller and Intel Ultra Path Interconnect (UPI) architecture. • Two processor sockets (expandable up to four) with minimal requirement of two installed on the system board. • Designed for LGA 3647 sockets • Scalable up to 28 cores • Supports Intel Extended Memory 32/64 Technology (EM32/64T)
Memory	See “Memory module installation order” in *Setup Guide* for detailed information about memory configuration and setup. • Minimum: 16 GB • Maximum: – RDIMM: 1.5 TB – LRDIMM: 3 TB – 3DS-RDIMM: 6 TB – DC Persistent Memory (DCPMM): 12 TB in Memory Mode • Memory module types: – Double-data-rate 4 (TruDDR4) error correcting code (ECC) 2666/2933 MT/s registered DIMM (RDIMM) or load reduced DIMM (LRDIMM) – DC Persistent Memory (DCPMM) • Capacity (depending on the model): – 8 GB, 16 GB, 32 GB, and 64 GB RDIMM – 64 GB LRDIMM – 64 GB and 128 GB 3DS-RDIMM – 128 GB, 256 GB, and 512 GB DCPMM **Note:** DCPMM can be mixed with DRAM DIMMs with capacity of more than 16 GB. See for more information. • Slots: 24 two-way interleaved slots (expandable to 48) **Note:** List of supported memory module is different for 1st generation (Skylake) and 2nd generation (Cascade Lake) Intel Xeon processors. Make sure to install compatible memory modules to avoid system error. For a list of supported DIMMs, see: https://serverproven.lenovo.com/.
Drive expansion	Sixteen 2.5-inch drive bays: • Eight 2.5-inch hot-swap SATA/SAS drive bays (bay 0-3, 8-11) • Eight 2.5-inch hot-swap SATA/SAS/NVMe drive bays (bay 4-7, 12-15)

Table 1. Specifications, Type 7X18 and 7X19 (continued)

Expansion slots	Eleven expansion slots: • Slot 1: PCI Express 3.0 x16 (supports PCIe switch card) • Slot 2: PCI Express 3.0 x8 (supports RAID adapters for SATA/SAS drives) • Slot 3 - 5: PCI Express 3.0 for PCIe riser-card with the following slots available depending on the riser-card installed: – x8/x8/x8 PCIe full-height riser assembly provides: – Slot 3: PCI Express 3.0 x8 – Slot 4: PCI Express 3.0 x8 – Slot 5: PCI Express 3.0 x8 – x8/x8/x8ML2 PCIe full-height riser assembly provides: – Slot 3: PCI Express 3.0 x8 – Slot 4: PCI Express 3.0 x8 – Slot 5: Customized slot for x8 ML2 adapter – x8/x16ML2 PCIe full-height riser assembly provides: – Slot 3: PCI Express 3.0 x8 – Slot 4: Not available – Slot 5: Customized slot for x16 ML2 adapter • Slot 6: Customized slot for dual M.2 backplane that supports M.2 drives in three different physical sizes: – 42 mm (2242) – 60 mm (2260) – 80 mm (2280) • Slot 7: Customized slot for LOM adapter • Slot 8: PCI Express 3.0 x8 • Slot 9: PCI Express 3.0 x8 • Slot 10: PCI Express 3.0 x8 (supports RAID adapters for SATA/SAS drives) • Slot 11: PCI Express 3.0 x16 (supports PCIe switch card)
Integrated functions	• Lenovo XClarity Controller (XCC), which provides service processor control and monitoring functions, video controller, and remote keyboard, video, mouse, and remote drive capabilities. • One system-management RJ-45 connector on the rear to connect to a systems-management network. This connector is dedicated to the Lenovo XClarity Controller functions and runs at 1 GB speed. • Light-path diagnostics • Four universal serial bus (USB) ports: – Two on the front of the server – One USB 2.0 with Lenovo XClarity Controller management – One USB 2.0 or 3.0 (depending on the model) – Two USB 3.0 on the rear of the server • One serial port
Network	This server supports 1GbE and 10 GbE LOM adapters with the following requirements: • 1GbE LOM adapter: maximal bandwidth of network environment is 1GB. • 10GbE LOM adapter: minimal bandwidth of network environment is 1GB.
RAID adapter(depending on model)	The following options with support for RAID levels 0, 1, and 10 are available for this server: • ThinkSystem RAID 530-8i PCIe 12 GB Adapter • ThinkSystem RAID 730-8i 1 GB Cache PCIe 12 GB Adapter • ThinkSystem RAID 730-8i 2 GB Cache PCIe 12 GB Adapter • ThinkSystem RAID 930-8i 2 GB Flash PCIe 12 GB Adapter • ThinkSystem RAID 930-16i 4 GB Flash PCIe 12 GB Adapter • ThinkSystem RAID 930-8e 4 GB Flash PCIe 12 GB Adapter
Fans	Six (60 mm x 38 mm) internal system fans (N+1 redundancy)

Table 1. Specifications, Type 7X18 and 7X19 (continued)

Electrical input	This server comes with three types of power supply units: • 750-watt platinum power supply – Input power 115V or 220V ac • 1100-watt platinum power supply – Input power 115V or 220V ac • 1600-watt platinum power supply – Input power 220V ac Two power supplies provide N+1 redundancy support. **CAUTION:** **1. 240 V dc input (input range: 180-300 V dc) is ONLY supported in Chinese Mainland.** **2. Power supplies with 240 V dc are not hot-swappable. To remove the power cord, ensure you have turned off the server or disconnected the dc power sources at the breaker panel.** **3. In order for the ThinkSystem products to operate error free in both a DC or AC electrical environment, a TN-S earthing system which complies to 60364-1 IEC 2005 standard has to be present or installed.**
Minimal configuration for debugging	• Two processors in processor socket 1 and 2 • Two DIMMs in slot 8 and 20 • One power supply • One drive with RAID adapter and backplane (If OS is needed for debugging) • Six system fans (fan 1 to fan 6)
Acoustical noise emissions	• Sound power, idling – 5.2 bels, minimum – 5.8 bels, typical – 6.4 bels, maximum • Sound power, operating – 5.8 bels, minimum – 6.8 bels, typical – 7.0 bels, maximum
Heat output	Approximate heat output: • Minimum configuration: 447 BTU, 131 W (in BTU per hour and watts) • Maximum configuration: 5265 BTU, 1543 W (in BTU per hour and watts)

Table 1. Specifications, Type 7X18 and 7X19 (continued)

Environment	ThinkSystem SR850 complies with ASHRAE Class A2 specifications. Depending on the hardware configuration, some models comply with ASHRAE Class A3 and Class A4 specifications. System performance may be impacted when operating temperature is outside ASHRAE A2 specification. • Air temperature: – Operating – ASHRAE Class A2: 10°C to 35°C (50°F to 95°F); the maximum ambient temperature decreases by 1°C for every 300 m (984 ft) increase in altitude above 900 m (2,953 ft). – ASHRAE Class A3: 5°C to 40°C (41°F to 104°F); the maximum ambient temperature decreases by 1°C for every 175 m (574 ft) increase in altitude above 900 m (2,953 ft). – ASHRAE Class A4: 5°C to 45°C (41°F to 113°F); the maximum ambient temperature decreases by 1°C for every 125 m (410 ft) increase in altitude above 900 m (2,953 ft). – Server off: 5°C to 45°C (41°F to 113°F) – Shipment/storage: -40°C to 60°C (-40°F to 140°F) • Maximum altitude: 3,050 m (10,000 ft) • Relative Humidity (non-condensing): – Operating – ASHRAE Class A2: 8% to 80%; maximum dew point: 21°C (70°F) – ASHRAE Class A3: 8% to 85%; maximum dew point: 24°C (75°F) – ASHRAE Class A4: 8% to 90%; maximum dew point: 24°C (75°F) – Shipment/storage: 8% to 90% • Particulate contamination **Attention:** Airborne particulates and reactive gases acting alone or in combination with other environmental factors such as humidity or temperature might pose a risk to the server. For information about the limits for particulates and gases, see “Particulate contamination” on page 5.
Operating systems	Supported and certified operating systems: • Microsoft Windows Server • VMware ESXi • Red Hat Enterprise Linux • SUSE Linux Enterprise Server References: • Complete list of available operating systems: https://lenovopress.lenovo.com/osig. • OS deployment instructions: See “Deploy the operating system” in *Setup Guide*..

Note: To maintain component reliability, system performance might vary at ambient temperature higher than 35°C while all the fans are functioning. With one fan failing, system performance might vary at ambient temperature higher than 27°C.

Particulate contamination

Attention: Airborne particulates (including metal flakes or particles) and reactive gases acting alone or in combination with other environmental factors such as humidity or temperature might pose a risk to the device that is described in this document.

Risks that are posed by the presence of excessive particulate levels or concentrations of harmful gases include damage that might cause the device to malfunction or cease functioning altogether. This specification sets forth limits for particulates and gases that are intended to avoid such damage. The limits must not be viewed or used as definitive limits, because numerous other factors, such as temperature or

moisture content of the air, can influence the impact of particulates or environmental corrosives and gaseous contaminant transfer. In the absence of specific limits that are set forth in this document, you must implement practices that maintain particulate and gas levels that are consistent with the protection of human health and safety. If Lenovo determines that the levels of particulates or gases in your environment have caused damage to the device, Lenovo may condition provision of repair or replacement of devices or parts on implementation of appropriate remedial measures to mitigate such environmental contamination. Implementation of such remedial measures is a customer responsibility.

Table 2. Limits for particulates and gases

Contaminant	Limits
Reactive gases	Severity level G1 as per ANSI/ISA 71.04-1985[1]: • The copper reactivity level shall be less than 200 Angstroms per month (Å/month ≈ 0.0035 µg/cm^2-hour weight gain).[2] • The silver reactivity level shall be less than 200 Angstroms per month (Å/month ≈ 0.0035 µg/cm^2-hour weight gain).[3] • The reactive monitoring of gaseous corrosivity must be conducted approximately 5 cm (2 in.) in front of the rack on the air inlet side at one-quarter and three-quarter frame height off the floor or where the air velocity is much higher.
Airborne particulates	Data centers must meet the cleanliness level of ISO 14644-1 class 8. For data centers without airside economizer, the ISO 14644-1 class 8 cleanliness might be met by choosing one of the following filtration methods: • The room air might be continuously filtered with MERV 8 filters. • Air entering a data center might be filtered with MERV 11 or preferably MERV 13 filters. For data centers with airside economizers, the choice of filters to achieve ISO class 8 cleanliness depends on the specific conditions present at that data center. • The deliquescent relative humidity of the particulate contamination should be more than 60% RH.[4] • Data centers must be free of zinc whiskers.[5]

[1] ANSI/ISA-71.04-1985. *Environmental conditions for process measurement and control systems: Airborne contaminants*. Instrument Society of America, Research Triangle Park, North Carolina, U.S.A.

[2] The derivation of the equivalence between the rate of copper corrosion growth in the thickness of the corrosion product in Å/month and the rate of weight gain assumes that Cu_2S and Cu_2O grow in equal proportions.

[3] The derivation of the equivalence between the rate of silver corrosion growth in the thickness of the corrosion product in Å/month and the rate of weight gain assumes that Ag_2S is the only corrosion product.

[4] The deliquescent relative humidity of particulate contamination is the relative humidity at which the dust absorbs enough water to become wet and promote ionic conduction.

[5] Surface debris is randomly collected from 10 areas of the data center on a 1.5 cm diameter disk of sticky electrically conductive tape on a metal stub. If examination of the sticky tape in a scanning electron microscope reveals no zinc whiskers, the data center is considered free of zinc whiskers.

Firmware updates

Several options are available to update the firmware for the server.

You can use the tools listed here to update the most current firmware for your server and the devices that are installed in the server.

- Best practices related to updating firmware is available at the following site:

  - http://lenovopress.com/LP0656
- The latest firmware can be found at the following site:
  - http://datacentersupport.lenovo.com/products/servers/system-x/system-x3850-x6/6241/downloads
- You can subscribe to product notification to stay up to date on firmware updates:
  - https://datacentersupport.lenovo.com/tw/en/solutions/ht509500

UpdateXpress System Packs (UXSPs)

Lenovo typically releases firmware in bundles called UpdateXpress System Packs (UXSPs). To ensure that all of the firmware updates are compatible, you should update all firmware at the same time. If you are updating firmware for both the Lenovo XClarity Controller and UEFI, update the firmware for Lenovo XClarity Controller first.

Update method terminology

- **In-band update**. The installation or update is performed using a tool or application within an operating system that is executing on the server's core CPU.
- **Out-of-band update**. The installation or update is performed by the Lenovo XClarity Controller collecting the update and then directing the update to the target subsystem or device. Out-of-band updates have no dependency on an operating system executing on the core CPU. However, most out-of-band operations do require the server to be in the S0 (Working) power state.
- **On-Target update.** The installation or update is initiated from an installed operating system executing on the target server itself.
- **Off-Target update.** The installation or update is initiated from a computing device interacting directly with the server's Lenovo XClarity Controller.
- **UpdateXpress System Packs (UXSPs)**. UXSPs are bundled updates designed and tested to provide the interdependent level of functionality, performance, and compatibility. UXSPs are server machine-type specific and are built (with firmware and device driver updates) to support specific Windows Server, Red Hat Enterprise Linux (RHEL) and SUSE Linux Enterprise Server (SLES) operating system distributions. Machine-type-specific firmware-only UXSPs are also available.

Firmware updating tools

See the following table to determine the best Lenovo tool to use for installing and setting up the firmware:

Tool	Update Methods Supported	Core System Firmware Updates	I/O Devices Firmware Updates	Graphical user interface	Command line interface	Supports UXSPs
Lenovo XClarity Provisioning Manager (LXPM)	In-band[2] On-Target	√		√		
Lenovo XClarity Controller (XCC)	Out-of-band Off-Target	√	Selected I/O devices	√		
Lenovo XClarity Essentials OneCLI (OneCLI)	In-band Out-of-band On-Target Off-Target	√	All I/O devices		√	√

Tool	Update Methods Supported	Core System Firmware Updates	I/O Devices Firmware Updates	Graphical user interface	Command line interface	Supports UXSPs
Lenovo XClarity Essentials UpdateXpress (LXCE)	In-band Out-of-band On-Target Off-Target	√	All I/O devices	√		√
Lenovo XClarity Essentials Bootable Media Creator (BoMC)	In-band Out-of-band Off-Target	√	All I/O devices	√ (BoMC application)	√ (BoMC application)	√
Lenovo XClarity Administrator (LXCA)	In-band[1] Out-of-band[2] Off-Target	√	All I/O devices	√		√
Lenovo XClarity Integrator (LXCI) for VMware vCenter	Out-of-band Off-Target	√	Selected I/O devices	√		
Lenovo XClarity Integrator (LXCI) for Microsoft Windows Admin Center	In-band Out-of-band On-Target Off-Target	√	All I/O devices	√		√
Lenovo XClarity Integrator (LXCI) for Microsoft System Center Configuration Manager	In-band On-Target	√	All I/O devices	√		√

Notes:

1. For I/O firmware updates.
2. For BMC and UEFI firmware updates.

- **Lenovo XClarity Provisioning Manager**

  From Lenovo XClarity Provisioning Manager, you can update the Lenovo XClarity Controller firmware, the UEFI firmware, and the Lenovo XClarity Provisioning Manager software.

  Note: By default, the Lenovo XClarity Provisioning Manager Graphical User Interface is displayed when you start the server and press the key specified in the on-screen instructions. If you have changed that default to be the text-based system setup, you can bring up the Graphical User Interface from the text-based system setup interface.

  For additional information about using Lenovo XClarity Provisioning Manager to update firmware, see:

"Firmware Update" section in the LXPM documentation compatible with your server at https://pubs.lenovo.com/lxpm-overview/

Important: Lenovo XClarity Provisioning Manager (LXPM) supported version varies by product. All versions of Lenovo XClarity Provisioning Manager are referred to as Lenovo XClarity Provisioning Manager and LXPM in this document, unless specified otherwise. To see the LXPM version supported by your server, go to https://pubs.lenovo.com/lxpm-overview/.

- **Lenovo XClarity Controller**

  If you need to install a specific update, you can use the Lenovo XClarity Controller interface for a specific server.

  Notes:

  – To perform an in-band update through Windows or Linux, the operating system driver must be installed and the Ethernet-over-USB (sometimes called LAN over USB) interface must be enabled.

    For additional information about configuring Ethernet over USB, see:

    "Configuring Ethernet over USB" section in the XCC documentation version compatible with your server at https://pubs.lenovo.com/lxcc-overview/

  – If you update firmware through the Lenovo XClarity Controller, make sure that you have downloaded and installed the latest device drivers for the operating system that is running on the server.

  For additional information about using Lenovo XClarity Controller to update firmware, see:

  "Updating Server Firmware" section in the XCC documentation compatible with your server at https://pubs.lenovo.com/lxcc-overview/

  Important: Lenovo XClarity Controller (XCC) supported version varies by product. All versions of Lenovo XClarity Controller are referred to as Lenovo XClarity Controller and XCC in this document, unless specified otherwise. To see the XCC version supported by your server, go to https://pubs.lenovo.com/lxcc-overview/.

- **Lenovo XClarity Essentials OneCLI**

  Lenovo XClarity Essentials OneCLI is a collection of command line applications that can be used to manage Lenovo servers. Its update application can be used to update firmware and device drivers for your servers. The update can be performed within the host operating system of the server (in-band) or remotely through the BMC of the server (out-of-band).

  For additional information about using Lenovo XClarity Essentials OneCLI to update firmware, see:

  https://pubs.lenovo.com/lxce-onecli/onecli_c_update

- **Lenovo XClarity Essentials UpdateXpress**

  Lenovo XClarity Essentials UpdateXpress provides most of OneCLI update functions through a graphical user interface (GUI). It can be used to acquire and deploy UpdateXpress System Pack (UXSP) update packages and individual updates. UpdateXpress System Packs contain firmware and device driver updates for Microsoft Windows and for Linux.

  You can obtain Lenovo XClarity Essentials UpdateXpress from the following location:

  https://datacentersupport.lenovo.com/solutions/lnvo-xpress

- **Lenovo XClarity Essentials Bootable Media Creator**

  You can use Lenovo XClarity Essentials Bootable Media Creator to create bootable media that is suitable for firmware updates, VPD updates, inventory and FFDC collection, advanced system configuration, FoD Keys management, secure erase, RAID configuration, and diagnostics on supported servers.

  You can obtain Lenovo XClarity Essentials BoMC from the following location:

https://datacentersupport.lenovo.com/solutions/lnvo-bomc

- **Lenovo XClarity Administrator**

  If you are managing multiple servers using the Lenovo XClarity Administrator, you can update firmware for all managed servers through that interface. Firmware management is simplified by assigning firmware-compliance policies to managed endpoints. When you create and assign a compliance policy to managed endpoints, Lenovo XClarity Administrator monitors changes to the inventory for those endpoints and flags any endpoints that are out of compliance.

  For additional information about using Lenovo XClarity Administrator to update firmware, see:

  http://sysmgt.lenovofiles.com/help/topic/com.lenovo.lxca.doc/update_fw.html

- **Lenovo XClarity Integrator offerings**

  Lenovo XClarity Integrator offerings can integrate management features of Lenovo XClarity Administrator and your server with software used in a certain deployment infrastructure, such as VMware vCenter, Microsoft Admin Center, or Microsoft System Center.

  For additional information about using Lenovo XClarity Integrator to update firmware, see:

  https://pubs.lenovo.com/lxci-overview/

Tech Tips

Lenovo continually updates the support website with the latest tips and techniques that you can use to solve issues that your server might encounter. These Tech Tips (also called retain tips or service bulletins) provide procedures to work around issues or solve problems related to the operation of your server.

To find the Tech Tips available for your server:

1. Go to http://datacentersupport.lenovo.com and navigate to the support page for your server.
2. Click on **How To's** from the navigation pane.
3. Click **Article Type → Solution** from the drop-down menu.

   Follow the on-screen instructions to choose the category for the problem that you are having.

Security advisories

Lenovo is committed to developing products and services that adhere to the highest security standards in order to protect our customers and their data. When potential vulnerabilities are reported, it is the responsibility of the Lenovo Product Security Incident Response Team (PSIRT) to investigate and provide information to our customers so they may put mitigation plans in place as we work toward providing solutions.

The list of current advisories is available at the following site:

https://datacentersupport.lenovo.com/product_security/home

Power on the server

After the server performs a short self-test (power status LED flashes quickly) when connected to input power, it enters a standby state (power status LED flashes once per second).

The server can be turned on (power LED on) in any of the following ways:

- You can press the power button.
- The server can restart automatically after a power interruption.

- The server can respond to remote power-on requests sent to the Lenovo XClarity Controller.

For information about powering off the server, see “Power off the server” on page 11.

Power off the server

The server remains in a standby state when it is connected to a power source, allowing the Lenovo XClarity Controller to respond to remote power-on requests. To remove all power from the server (power status LED off), you must disconnect all power cables.

To place the server in a standby state (power status LED flashes once per second):

Note: The Lenovo XClarity Controller can place the server in a standby state as an automatic response to a critical system failure.

- Start an orderly shutdown using the operating system (if supported by your operating system).
- Press the power button to start an orderly shutdown (if supported by your operating system).
- Press and hold the power button for more than 4 seconds to force a shutdown.

When in a standby state, the server can respond to remote power-on requests sent to the Lenovo XClarity Controller. For information about powering on the server, see “Power on the server” on page 10.

Chapter 2. Server components

Use the information in this section to learn about each of the components associated with your server.

Identifying your server

When you contact Lenovo for help, the machine type, model, and serial number information help support technicians to identify your server and provide faster service.

Figure 2 “Location of the machine type, model, and serial number” on page 13 shows the location of the label containing the machine type, model, and serial number.

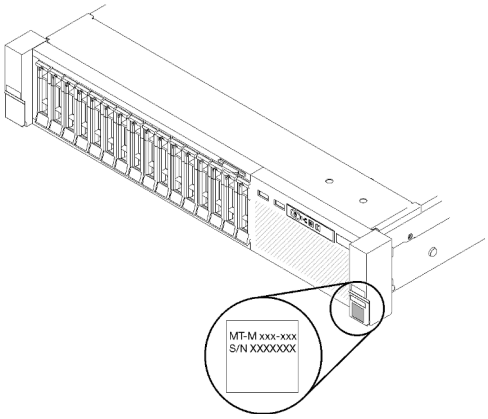

Figure 2. Location of the machine type, model, and serial number

The model number and serial number are on the ID label on the front of the server, as shown in the following illustrations. You can also add other system information labels to the front of the server in the customer label spaces.

XClarity Controller network access label

In addition, the XClarity Controller network access labelis attached to the pull-out information tab located near the top of the center of the front view, with MAC address accessible with a pull.

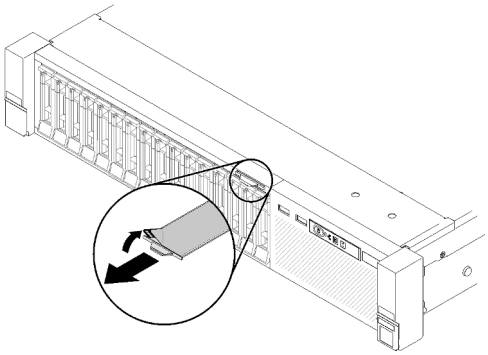

Figure 3. XClarity Controller network access label on the pull-out information tab

Front view

This section contains information about the controls, LEDs, and connectors on the front of the server.

© Copyright Lenovo 2017, 2023

The following illustration shows the controls, LEDs, and connectors on the front of the server.

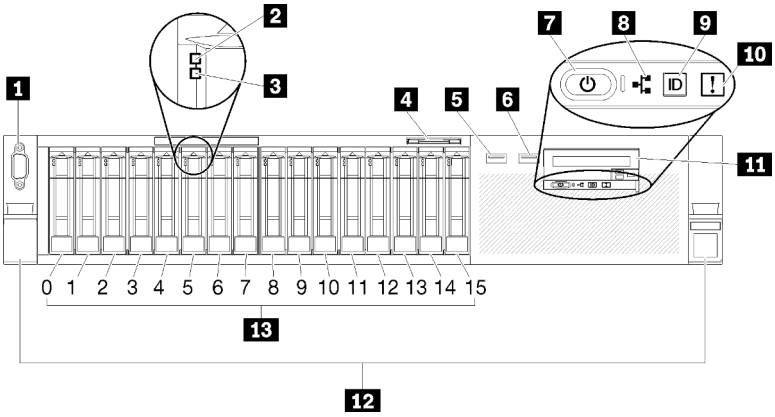

Figure 4. Front view

Table 3. Components on the server front view

1 VGA connector (optional)	8 Network activity LED (green)
2 Drive activity LED (green)	9 Identification button/LED (blue)
3 Drive status LED (yellow)	10 System error LED (yellow)
4 Pull-out information tab	11 Front operator panel with optional pull-out LCD display
5 USB 1 (USB 2.0 with Lenovo XClarity Controller management)	12 Rack release latches
6 USB 2	13 2.5-inch drive bays
7 Power button/LED (green)	

1 VGA connector (optional):

Connect a monitor to this connector.

Notes:

- When the optional front VGA connector is in use, the rear one will be disabled.
- The maximum video resolution is 1920 x 1200 at 60 Hz.

2 Drive activity LED (green):

Each hot-swap drive comes with an activity LED, and when this LED is flashing, it indicates that the drive is in use.

3 Drive status LED (yellow):

These LEDs are on SAS or SATA hard disk drives and solid-state drives. When one of these LEDs is lit, it indicates that the drive has failed. When this LED is flashing slowly (one flash per second), it indicates that the drive is being rebuilt. When the LED is flashing rapidly (three flashes per second), it indicates that the controller is identifying the drive.

4 Pull-out information tab:

This tag contains network information such as MAC address, which is available with a pull on the tab.

5 6 USB connectors:

Connect a USB device, such as a USB mouse, keyboard, or other device, to any of these connectors. Following are detailed descriptions of each connector:

- 5 USB 1: USB 2.0 with Lenovo XClarity Controller management.

  Connection to XClarity Controller is primarily intended for users with a mobile device running the XClarity Controller mobile application. When a mobile device is connected to this USB port, an Ethernet over USB connection is established between the mobile application running on the device and the XClarity Controller.

  Select **Network** in **BMC Configuration** to view or modify USB 2.0 with Lenovo XClarity Controller management settings.

  Four types of settings are available:

  - **Host only mode**

    In this mode, the USB port is always solely connected to the server.
  - **BMC only mode**

    In this mode, the USB port is always solely connected to XClarity Controller.
  - **Shared mode: owned by BMC**

    In this mode, connection to the USB port is shared by the server and XClarity Controller, while the port is switched to XClarity Controller.
  - **Shared mode: owned by host**

    In this mode, connection to the USB port is shared by the server and XClarity Controller, while the port is switched to the server.
- 6 USB 2: USB 2.0 or 3.0 (depending on the model).

7 Power button/LED (green):

Press the power button to turn the server on and off manually. This LED indicates power status of the server. See “Front operator panel” on page 16 for more details.

8 Network activity LED (green):

When this LED is lit, it indicates that the server is transmitting to or receiving signals from the Ethernet LAN.

9 Identification button/LED (blue):

Press this button to visually locate the server among other servers. Use this LED to visually locate the server among other servers. XCC can also be used to turn this LED on and off.

10 System error LED (yellow):

When this yellow LED is lit, it indicates that a system error has occurred. This LED can be controlled by the XCC. Information provided from the LCD display of the front operator panel could also help isolate an error.

11 Front operator panel with optional pull-out LCD display:

This panel contains controls and LEDs that provide information about the status of the server. For information about the controls and LEDs on the front operator panel, see “Front operator panel” on page 16.

12 Rack release latches:

Press the latch on both sides in the front of the server to slide the server out of the rack.

13 2.5-inch drive bays:

Install 2.5-inch drives to these bays. See “2.5-inch hot-swap drive and drive backplane replacement” on page 58 for more details.

Front operator panel

The following illustration shows the controls and LEDs on the front operator panel.

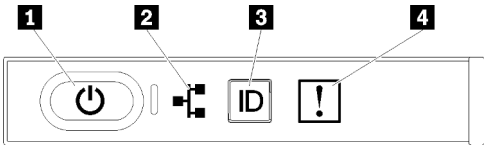

Figure 5. Front operator panel

Table 4. Buttons and LEDs on the front operator panel

1 Power button/LED (green)	3 Identification button/LED (blue)
2 Network activity LED (green)	4 System error LED (yellow)

1 Power button/LED (green)

Press this button to turn the server on and off manually. The states of the power LED are as follows:

Off: No power supply is properly installed, or the LED itself has failed.

Flashing rapidly (4 times per second): The server is turned off and is not ready to be turned on. The power-control button is disabled. This will last approximately 5 to 10 seconds.

Flashing slowly (once per second): The server is turned off and is ready to be turned on. You can press the power-control button to turn on the server.

Lit: The server is turned on.

2 Network activity LED (green)

When this LED is lit, it indicates that the server is transmitting to or receiving signals from the Ethernet LAN.

3 Identification button/LED (blue)

Use this blue LED to visually locate the server among other servers. This LED is also used as a presence detection button. You can use Lenovo XClarity Administrator to light this LED remotely.

4 System error LED (yellow)

When this yellow LED is lit, it indicates that a system error has occurred. This LED can be controlled by the XCC. Information provided from the LCD display of the front operator panel could also help isolate an error.

Front operator panel with LCD display

The following section includes an overview of the LCD system information display panel of front operator panel, which displays various types of information about the server.

Your front operator panel may come with a LCD display, which is accessible with a pull on the latch on the right of the front operator panel.

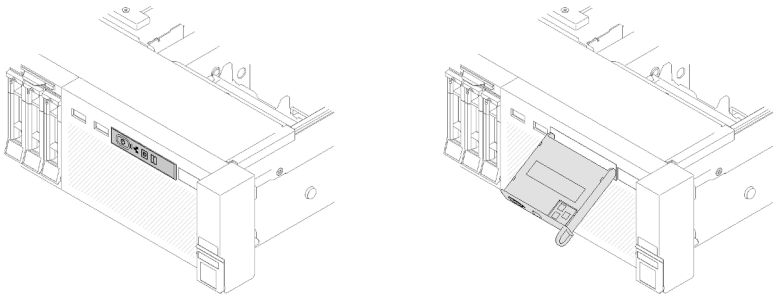

Figure 6. Front operator panel and LCD display

The LCD system information display panel attached to the front of the server allows quick access to system status, firmware, network, and health information.

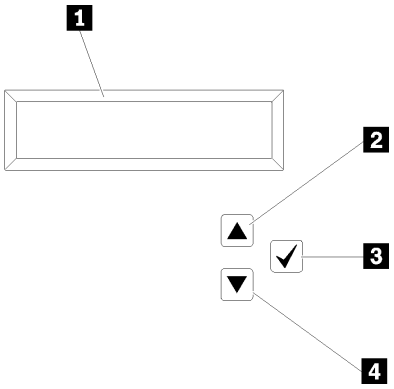

Figure 7. System information and control of the front operator panel

Table 5. System information and control of the front operator panel

1 System information: System information, including system name, system status, temperature, power consumption and UEFI/POST code, is displayed here.	**3 Select button:** Press this button to make your selection from the menu options.
2 Scroll up button: Press this button to scroll up or scroll to the left in the main menu to locate and select the system information that you want displayed.	**4 Scroll down button:** Press this button to scroll down or scroll to the right in the main menu to location and select the system information that you want displayed.

Following is an example of the information on the display panel.

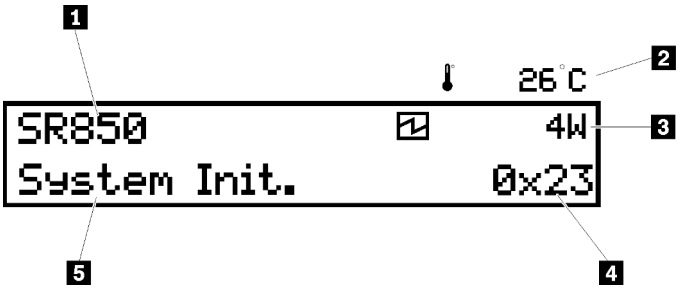

Figure 8. System information on LCD display panel

Table 6. System information display panel of front operator panel

1 System name (SR850)	4 Checkpoint code
2 Temperature (blinking in turns with 3)	5 System status
3 Power consumption (blinking in turns with 2)	

The option menu UI flow on the LCD display is illustrated as following.

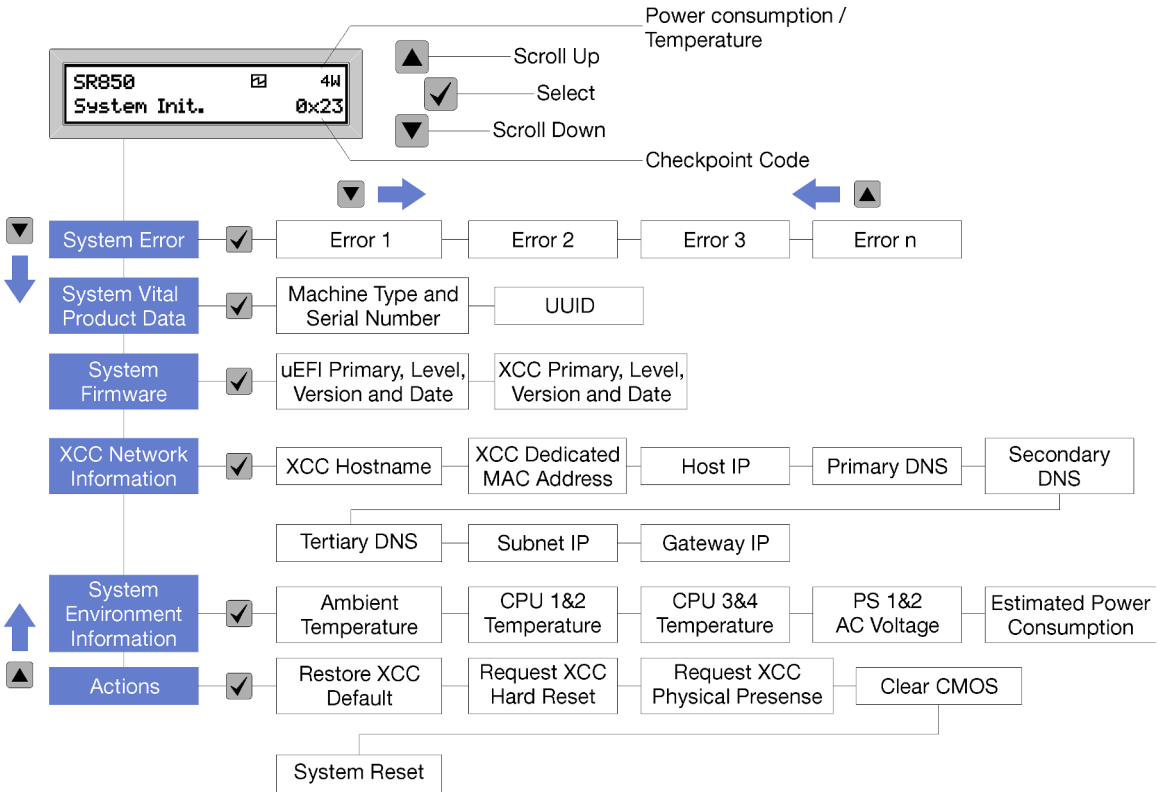

Figure 9. Front operator panel option menu UI flow

Following is the list of options available on the front operator panel. Switch between an option and the subordinate information entries with **Select** (√) button, and switch among options or information entries with **Scroll up** (▾) and **Scroll down** (▴) buttons.

Table 7. Options available on the front operator panel

Option	Description
System error	**System error** provides the total number of errors the system encountered, and the description of these errors. The information is displayed as following: `System Has Encountered X Errors` Whereas X is the total number of system errors encountered. Access error descriptions with select button, and switch among the descriptions with scroll up and down buttons. **Note:** When only one error occurs, the LCD display panel displays error description instead of number of errors encountered.

System vital product data	**System vital product data** provides the following information:
	• **Machine type and serial number** are displayed as following:
	`Machine Type: XXXXXXXX`
	`Serial Num: YYYYYY`
	• **UUID (universally unique identifier)** is displayed as following:
	`UUID: ZZZZZZZZZZZZZZZZZZZZZZZZZZZZ`
	Whereas
	• XXXXXXXX is the machine type.
	• YYYYYY is the serial number.
	• ZZZZZZZZZZZZZZZZZZZZZZZZZZZZ is the UUID

System firmware level	**System firmware level** provides information about the following firmware:
	• **UEFI primary level** is displayed as following:
	`UEFI Pri: TEEXXXX`
	`vN.NN Date: YYYY-MM-DD`
	• **XCC primary level** is displayed as following:
	`XCC Pri: TEEXXXX`
	`vN.NN Date: YYYY-MM-DD`
	Whereas
	• XXXX is the level information.
	• N.NN is the version number.
	• YYYY is the year.
	• MM is the month.
	• DD is the date.

Table 7. Options available on the front operator panel (continued)

XCC network information	**XCC Network information** provides the following XCC related network information:
	• **XCC hostname** is displayed as following:
	`XCC Hostname: XCC-NNNN`
	• **XCC shared or extension MAC address** is displayed as following:
	`XCC Dedicated MAC: XX:XX:XX:XX:XX:XX`
	• **IP Address** is displayed as following:
	`IP Host IP: Y.Y.Y.Y`
	• **Primary DNS** is displayed as following:
	`IP Primary DNS: Y.Y.Y.Y`
	• **Secondary DNS** is displayed as following:
	`IP Secondary DNS: Y.Y.Y.Y`
	• **Tertiary DNS** is displayed as following:
	`IP Tertiary DNS: Y.Y.Y.Y`
	• **Subnet IP** is displayed as following:
	`IP Subnet IP: Y.Y.Y.Y`
	• **Gateway IP** is displayed as following:
	`IP Gateway IP: Y.Y.Y.Y`
	Whereas
	• NNNN is the machine type.
	• XX.XX:XX:XX:XX:XX:XX is a MAC address.
	• Y.Y.Y.Y is an IPv4 or IPv6 address.

System environmental information	**System environmental information** provides the following information:
	• **Ambient temperature** is displayed as following:
	`Ambient Temperature: XX C`
	• **Processor temperature** is displayed as following:
	`CPU1 Temperature: XX C`
	`CPU2 Temperature: XX C`
	`CPU3 Temperature: XX C`
	`CPU4 Temperature: XX C`
	Switch between CPU1/2 and CPU3/4 with scroll up and down buttons.
	• **AC input voltage** is displayed as following:
	`PS1 AC Voltage: YYY V`
	`PS2 AC Voltage: YYY V`
	• **Estimated power consumption** is displayed as following:
	`Sytem Power: ZZ W`
	Whereas
	• XX is the temperature.
	• YYY is the AC voltage.
	• ZZ is the wattage.

Table 7. Options available on the front operator panel (continued)

Actions	**Actions** provides the following available actions, which come in effect by pressing and holding on the select button for three seconds: • **Restore XCC default settings** is displayed as following: RESTORE XCC DEFAULTS? HOLD v FOR 3s • **Restart XCC** is displayed as following: REQUEST XCC HARD RESET? HOLD v FOR 3s • **Request XCC physical presence** is displayed as following: REQUEST XCC PHY. PRES.? HOLD v FOR 3s • **Clear CMOS** is displayed as following: CLEAR CMOS? HOLD v FOR 3s **Note:** This action is only available when the system power is off. • **System reboot** is displayed as following: SYSTEM RESET BUTTOM? HOLD v FOR 3s

Rear view

This section contains information about the LEDs and connectors on the rear of the server.

The following illustrations show the connectors and LEDs on the rear of the server.

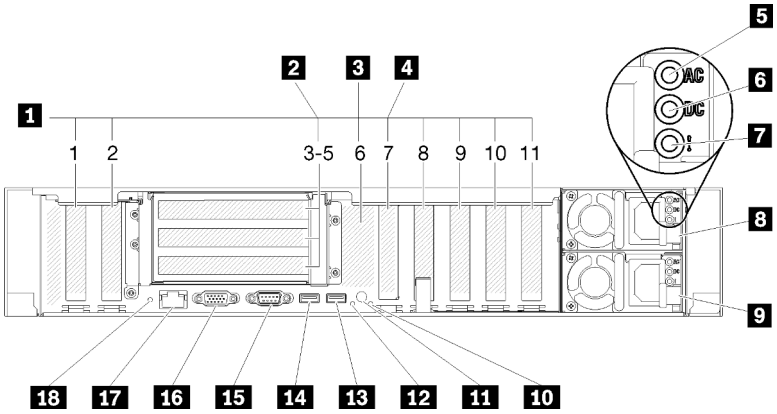

Figure 10. Rear view

Table 8. Components on the server rear view

1 PCIe slots (slot 1-2, 8-11)	10 System error LED (yellow)
2 PCIe riser-card (slot 3-5)	11 Identification button
3 M.2 backplane (slot 6, internal)	12 Identification LED (blue)

Table 8. Components on the server rear view (continued)

4 LOM adapter (slot 7)	13 USB 4 (USB 3.0)
5 AC power LED (green)	14 USB 3 (USB 3.0)
6 DC power LED (green)	15 Serial connector
7 Power supply error LED (yellow)	16 VGA connector
8 Power supply unit 2	17 XClarity Controller network connector
9 Power supply unit 1	18 NMI button

1 PCIe slots (slot 1-2, 8-11):

Install PCIe adapters into these slots. Following are detailed descriptions of each slot:

- Slot 1: PCI Express 3.0 x16 (supports PCIe switch card)
- Slot 2: PCI Express 3.0 x8 (supports RAID adapters for SATA/SAS drives)
- Slot 8: PCI Express 3.0 x8
- Slot 9: PCI Express 3.0 x8
- Slot 10: PCI Express 3.0 x8 (supports RAID adapters for SATA/SAS drives)
- Slot 11: PCI Express 3.0 x16 (supports PCIe switch card)

For more information, see “System-board connectors” on page 25 for the location of the slots, and “PCIe riser-card assembly and adapter replacement” on page 93 for information about installation and removal.

2 PCIe riser-card (slot 3-5):

Install a full-height PCIe riser-card into this slot. Following are the PCIe riser-cards supported by this server.

- x8/x8/x8 PCIe full-height riser assembly provides:
  - Slot 3: PCI Express 3.0 x8
  - Slot 4: PCI Express 3.0 x8
  - Slot 5: PCI Express 3.0 x8
- x8/x8/x8ML2 PCIe full-height riser assembly provides:
  - Slot 3: PCI Express 3.0 x8
  - Slot 4: PCI Express 3.0 x8
  - Slot 5: Customized slot for x8 ML2 adapter
- x8/x16ML2 PCIe full-height riser assembly provides:
  - Slot 3: PCI Express 3.0 x8
  - Slot 4: Not available
  - Slot 5: Customized slot for x16 ML2 adapter

3 M.2 backplane (slot 6):

Install M.2 backplane to this slot. See “M.2 drive and backplane replacement” on page 78 for more details.

4 LOM adapter (slot 7):

Insert LOM adapter into this slot (see “System-board connectors” on page 25 for the location of the LOM adapter slot on the system board and “LOM adapter replacement” on page 75 for information about the installation of the LOM adapter).

5 AC power LED:

Each hot-swap power supply comes with an ac power LED and a dc power LED. When the ac power LED is lit, it indicates that sufficient power is being supplied to the power supply through the power cord. During normal operation, both the ac and dc power LEDs are lit. For more information, see “Light path diagnostics” on page 150.

6 DC power LED:

Each hot-swap power supply comes with a dc power LED and an ac power LED. When the dc power LED is lit, it indicates that the power supply is supplying adequate dc power to the system. During normal operation, both the ac and dc power LEDs are lit. For more information, see “Light path diagnostics” on page 150.

7 Power-supply error LED:

When the power-supply error LED is lit, it indicates that the power supply has failed.

8 9 Power supply units:

Install power supply units to these bays, connect them to power cords. Make sure the power cords are connected properly. Following are the power supplies supported by this system:

- 750-watt platinum power supply
  - Input power 115V or 230V ac
- 1100-watt platinum power supply
  - Input power 115V or 230V ac
- 1600-watt platinum power supply
  - Input power 230V ac

10 System error LED (yellow):

When this yellow LED is lit, it indicates that a system error has occurred. This LED can be controlled by the XCC. Information provided from the LCD display of the front operator panel could also help isolate an error.

11 Identification button:

Press this button to visually locate the server among other servers. This button is functionally equivalent to the identification button on the front of the server.

12 Identification LED (blue):

Use this LED to visually locate the server among other servers. XCC can also be used to turn this LED on and off. This LED is functionally equivalent to the identification LED on the front of the server.

13 14 USB connectors (USB 3.0):

Connect a USB device, such as a USB mouse, keyboard, or other device, to any of these connectors.

15 Serial connector:

Connect a 9-pin serial device to this connector. The serial port is shared with the XCC. The XCC can take control of the shared serial port to redirect serial traffic, using Serial over LAN (SOL).

16 VGA connector:

Connect a monitor to this connector.

Notes:

- When the optional front VGA connector is in use, the rear one will be disabled.
- The maximum video resolution is 1920 x 1200 at 60 Hz.

17 XClarity Controller network connector:

Use this connector to manage the server, by using a dedicated management network. If you use this connector, the Lenovo XClarity Controller cannot be accessed directly from the production network. A dedicated management network provides additional security by physically separating the management network traffic from the production network. You can use the Setup utility to configure the server to use a dedicated systems-management network or a shared network.

18 NMI button:

Press this button to force a nonmaskable interrupt to the processor. You might have to use a pen or the end of a straightened paper clip to press the button. You can also use it to force a blue-screen memory dump. Use this button only when you are directed to do so by Lenovo Support.

System-board connectors

Use this information to locate the system-board internal connectors.

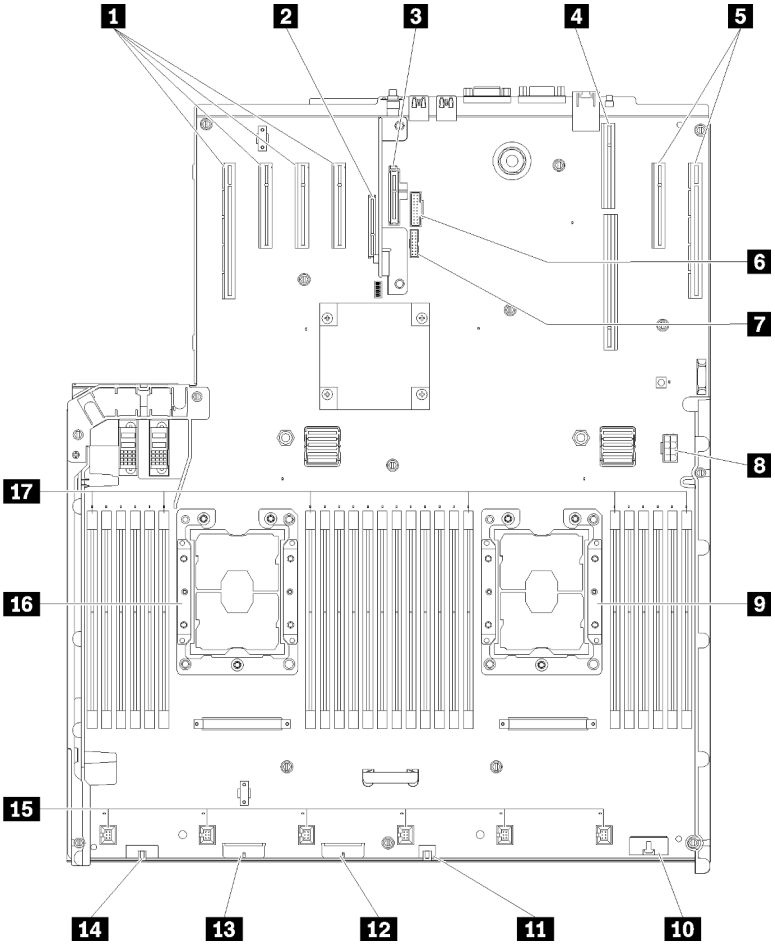

Figure 11. System-board connectors

Table 9. System-board connectors

1 PCIe slot 11, 10, 9, 8	10 Front operator panel connector
2 PCIe slot 7 (LOM adapter)	11 USB 1 (USB 2.0 with Lenovo XClarity Controller management)
3 PCIe slot 6 (M.2 backplane)	12 Backplane connector 2
4 PCIe slot 3-5 (PCIe riser-card)	13 Backplane connector 1
5 PCIe slot 2, 1	14 Front VGA connector
6 USB 2 (USB 3.0)	15 Fan connector 1-6
7 TCM/TPM module	16 Processor 1
8 Auxiliary power connector	17 DIMM slot 1-6, 7-18, 19-24
9 Processor 2	

Switches, jumpers, and buttons

The following illustrations show the location of the switches, jumpers, and buttons on the server.

Note: If there is a clear protective sticker on the top of the switch block, you must remove and discard it to access the switch.

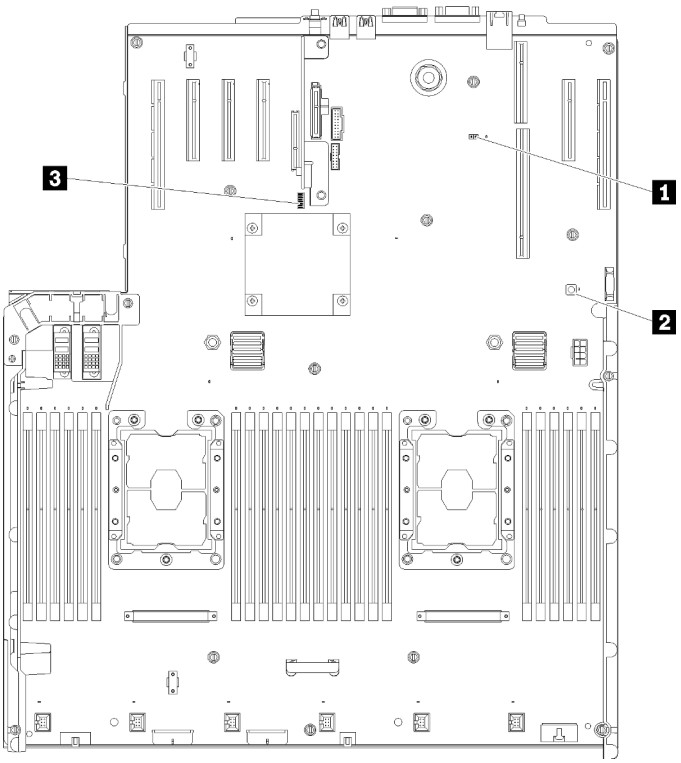

Figure 12. Switches, jumpers and buttons

Table 10. System-board switches, jumpers, and buttons

1 J20	3 Switch block (SW13) See Table 11 “System-board SW13 switch block descriptions” on page 26 for more details.
2 Light path button Press this button to light the LEDs on the system board when the power source has been removed from the server.	

The following table describes the functions of the SW13 switch block on the system board.

The following table describes the functions of the SW613 switch block on the system board.

Table 11. System-board SW13 switch block descriptions

Switch number	Default position	Off	On
1	Off	Host TPM Physical Presence disable	Host TPM Physical Presence enable

Table 11. System-board SW13 switch block descriptions (continued)

2	Off	Disable PASSWORD_OVERRIDE function	Enable PASSWORD_ OVERRIDE function
3	Off	Serial port message from Lenovo XClarity Controller	Serial port message from uEFI
4	Off	Reserved for trained service technician	
5	Off	Reserved for trained service technician	
6	Off	Reserved for trained service technician	
7	Off	Reserved for trained service technician	
8	Off	Normal	Force RTC reset

Important:

1. Before you change any switch settings or move any jumpers, turn off the server; then, disconnect all power cords and external cables. Review the information in https://pubs.lenovo.com/safety_documentation/, "Installation Guidelines" on page 55, "Handling static-sensitive devices" on page 57, and "Power off the server" on page 11.
2. Any system-board switch or jumper block that is not shown in the illustrations in this document are reserved.

The following table describes the functions of the button on the system board.

Table 12. Button on the server

Button name	Function
Force NMI button	This button is on the rear of the server. Press this button to force a nonmaskable interrupt to the processor. You might have to use a pen or the end of a straightened paper clip to press the button. You can also use it to force a blue-screen memory dump (use this button only when you are directed to do so by Lenovo Support).

System-board LEDs

Use this information to locate the system-board LEDs.

The following illustration shows the light-emitting diodes (LEDs) on the system board.

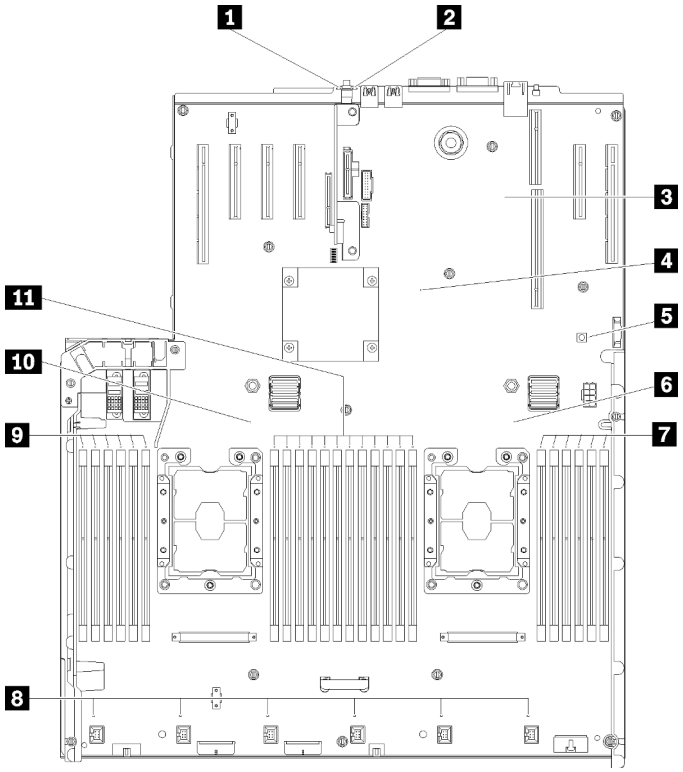

Figure 13. System-board LEDs

Table 13. System-board LEDs

1 System error LED (yellow)	7 DIMM 19-24 error LED
2 Identification LED (blue)	8 Fan 1-6 error LED
3 XCC heartbeat LED (Green)	9 DIMM 1-6 error LED
4 FPGA heartbeat LED (Green)	10 Processor 1 LED
5 Light path power LED	11 DIMM 7-18 error LED
6 Processor 2 LED	

Optional processor and memory expansion tray

Use this information to locate the connectors and LEDs on the optional processor and memory expansion tray.

The following illustrations show the connectors and LEDs on the processor and memory expansion tray.

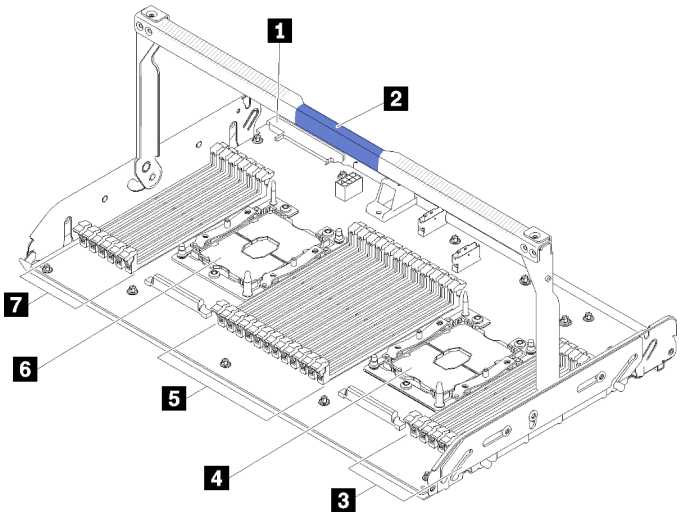

Figure 14. Optional processor and memory expansion tray

Table 14. Components on the optional processor and memory expansion tray

1 Power supply 2 connector	5 DIMM slot 31-42
2 Tray handle	6 Processor 3
3 DIMM slot 43-48	7 DIMM slot 25-30
4 Processor 4	

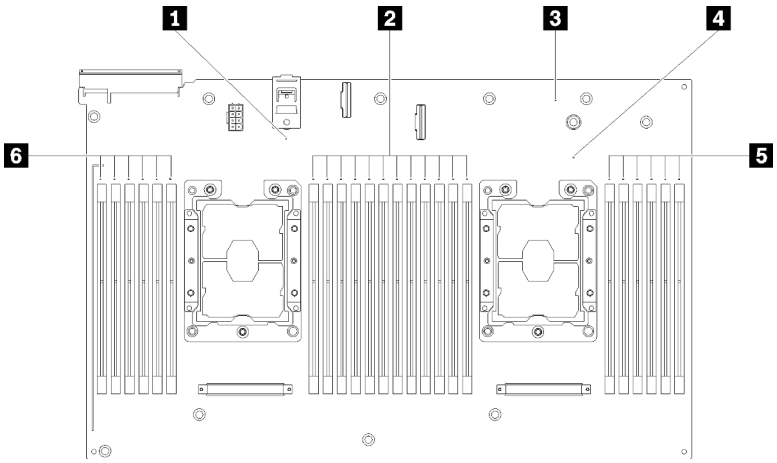

Figure 15. LEDs on the optional processor and memory expansion tray

Table 15. LEDs on the optional processor and memory expansion tray

1 Processor 3 error LED	4 Processor 4 error LED
2 DIMM slot 31-42 error LEDs	5 DIMM slot 43-48 error LEDs
3 Expansion board error LED	6 DIMM slot 25-30 error LEDs

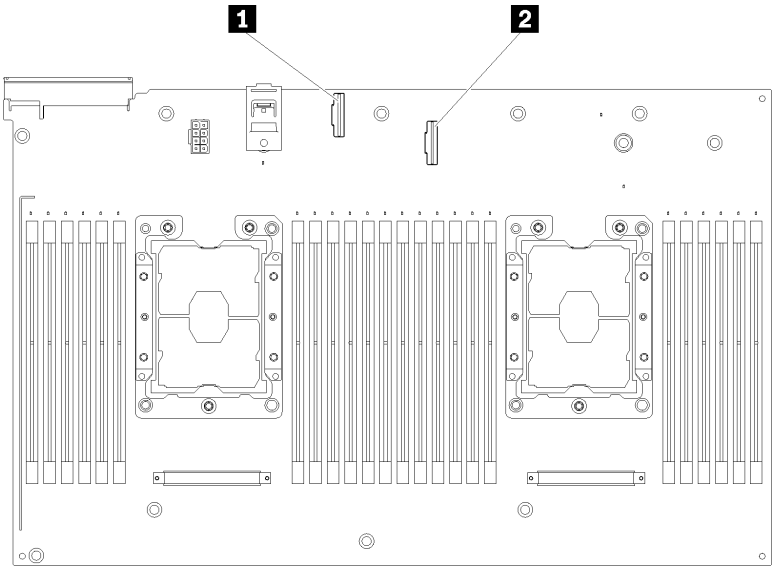

Figure 16. Connectors on the optional processor and memory expansion tray

Table 16. Connectors on the optional processor and memory expansion tray

1 NVMe signal cable connector 0-1	2 NVMe signal cable connector 2-3

PCIe riser-cards

Use this information to locate the connectors on the optional PCIe riser-cards.

x8/x8/x8 PCIe FH Riser Assembly

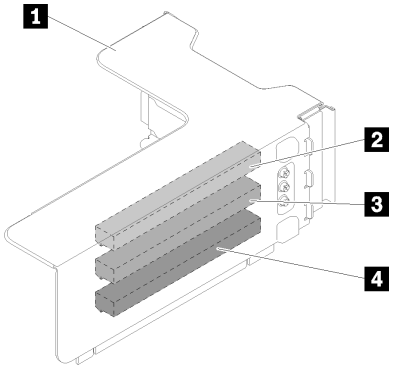

Figure 17. x8/x8/x8 PCIe FH Riser Assembly

Table 17. Components of x8/x8/x8 PCIe FH Riser Assembly

1 PCIe full-height riser cage	3 PCI Express 3.0 x8 (slot 4)
2 PCI Express 3.0 x8 (slot 3)	4 PCI Express 3.0 x8 (slot 5)

x8/x8/x8ML2 PCIe FH Riser Assembly

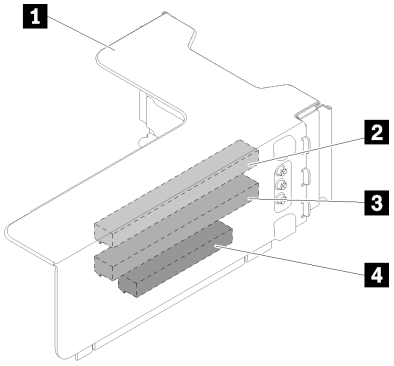

Figure 18. x8/x8/x8ML2 PCIe FH Riser Assembly

Table 18. Components of x8/x8/x8ML2 PCIe FH Riser Assembly

1 PCIe full-height riser cage	3 PCI Express 3.0 x8 (slot 4)
2 PCI Express 3.0 x8 (slot 3)	4 Customized slot for ML2 adapter (slot 5)

x8/x16ML2 PCIe FH Riser Assembly

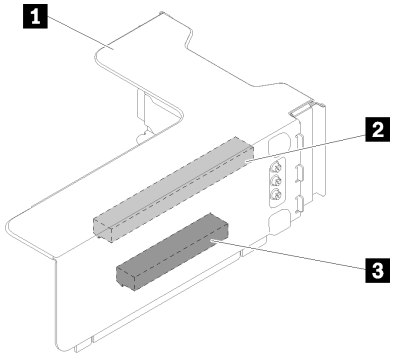

Figure 19. x8/x16ML2 PCIe FH Riser Assembly

Table 19. Components of x8/x16ML2 PCIe FH Riser Assembly

1 PCIe full-height riser cage	3 Customized slot for ML2 adapter (slot 5)
2 PCI Express 3.0 x8 (slot 3)	

2.5-inch drive backplanes

Use this information to locate the connectors on the optional 2.5-inch drive backplanes.

2.5-inch SATA/SAS 8-bay backplane

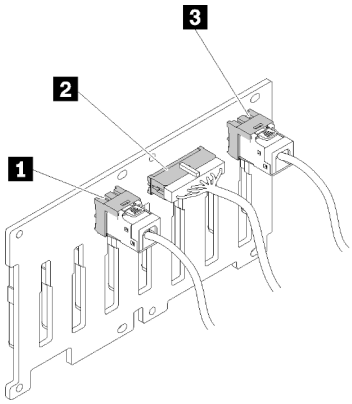

Figure 20. 2.5-inch SATA/SAS 8-bay backplane

Table 20. Connectors on 2.5-inch SATA/SAS 8-bay backplane

1 SATA/SAS connector 1	3 SATA/SAS connector 0
2 Power/configuration cable connector	

2.5-inch SATA/SAS 8-bay backplane comes with:

- Eight SATA/SAS drive connectors with bay numbers of 0-7 or 8-15, depending on the location installed.
- One power/configuration connector
- Two SATA/SAS connectors (0, 1)

2.5-inch AnyBay (SATA/SAS/NVMe) 8-bay backplane

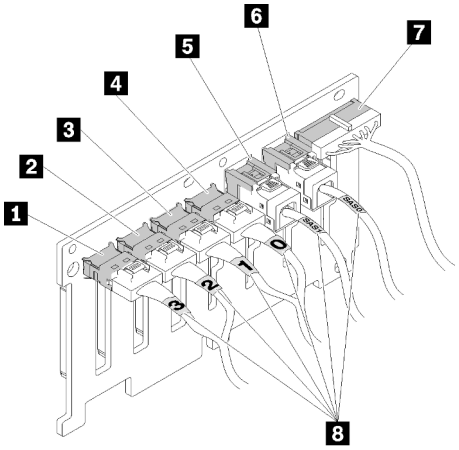

Figure 21. 2.5-inch AnyBay (SATA/SAS/NVMe) 8-bay backplane

Table 21. Connectors on 2.5-inch AnyBay (SATA/SAS/NVMe) 8-bay backplane

1 NVMe connector 3	5 SATA/SAS connector 1
2 NVMe connector 2	6 SATA/SAS connector 0
3 NVMe connector 1	7 Power/configuration cable connector
4 NVMe connector 0	8 Cable numbering labels

2.5-inch AnyBay (SATA/SAS/NVMe) 8-bay backplane comes with:

- Four SATA/SAS drive connectors with bay numbers of 0-3 or 8-11, depending on the location installed.
- Four NVMe drive connectors with bay numbers of 4-7 or 12-15, depending on the location installed.
- One power/configuration cable connector
- Two SATA/SAS connectors (0, 1)
- Four NVMe connectors (0, 1, 2, 3)

RAID adapters

Use this information to locate the connectors on the optional RAID adapters.

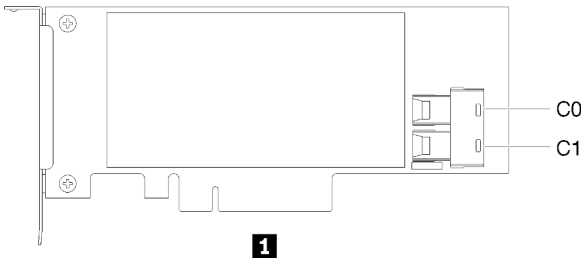

Figure 22. Connectors on SATA/SAS RAID adapter (8i)

Table 22. SATA/SAS RAID adapter (8i)

1 SATA/SAS RAID adapter (8i) with two SATA/SAS connectors (C0, C1)

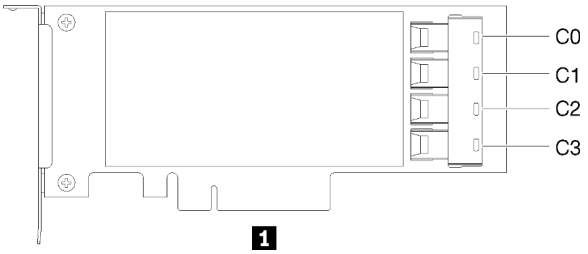

Figure 23. Connectors on SATA/SAS RAID adapter (16i)

Table 23. SATA/SAS RAID adapter (16i)

1 SATA/SAS RAID adapter (16i) with four SATA/SAS connectors (C0, C1, C2, C3)

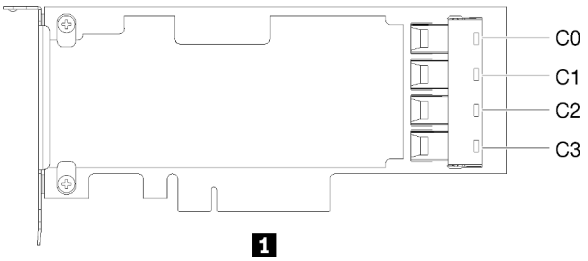

Figure 24. Connectors on PCIe switch card

Table 24. PCIe switch card

1 PCIe switch card with four SATA/SAS connectors (C0, C1, C2, C3)

Internal cable routing

This section provides information about routing the cables when you install components in the server.

For more information about the requirements for cables and connecting devices, see the documentation that comes with these devices.

Cable routing for 2.5-inch drives

Use this section to understand how to route cables for 2.5-inch drives.

Following is the list of combinations of cable routing for 2.5-inch drives.

- "Connecting signal cables to one backplane" on page 36
  - "One 8-bay backplane" on page 37
  - "One AnyBay backplane" on page 37
    - Two processors installed
    - Four processors installed
- "Connecting signal cables to two backplanes" on page 40
  - "8-bay backplane + 8-bay backplane" on page 40
  - "8-bay backplane + AnyBay backplane" on page 41
    - Two processors installed

  - Four processors installed
- "AnyBay backplane + AnyBay backplane" on page 45
  - Two processors installed
  - Four processors installed

Important:

1. Make sure all the signal cables go through the cable guides.

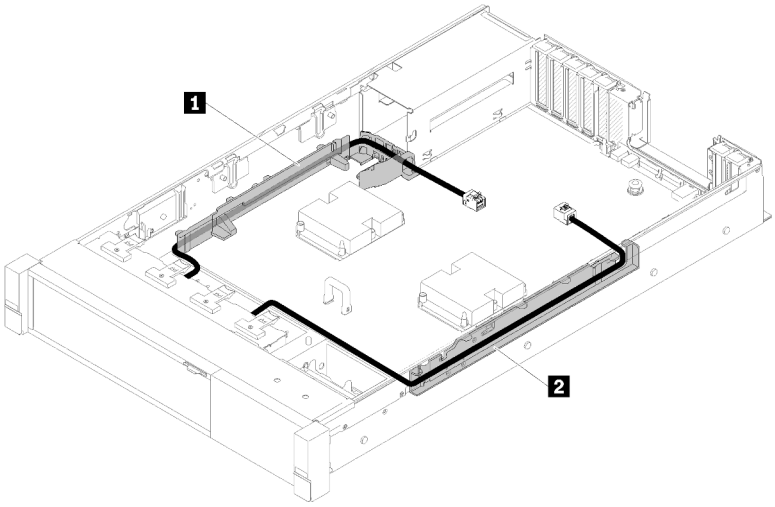

Figure 25. Cable guide locations

2. Connect the direct NVMe signal cables to the NVMe connectors on the processor and memory expansion tray.

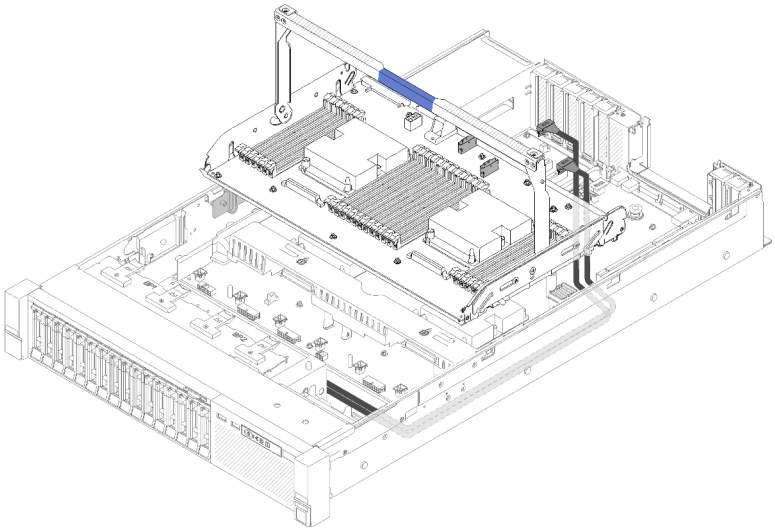

Figure 26. Connecting NVMe cables to the processor and memory expansion tray

Before starting cable routing for 2.5-inch drives:

1. Remove the fan cage assembly (see "Remove the fan cage assembly" on page 65).

2. Remove the system board air baffle (see “Remove the system board air baffle and the power interposer” on page 126) or the processor and memory expansion tray and the expansion tray air baffle (see “Remove the processor and memory expansion tray” on page 120).

Connecting power cable

Connect power cables for drive backplanes as in the following illustration.

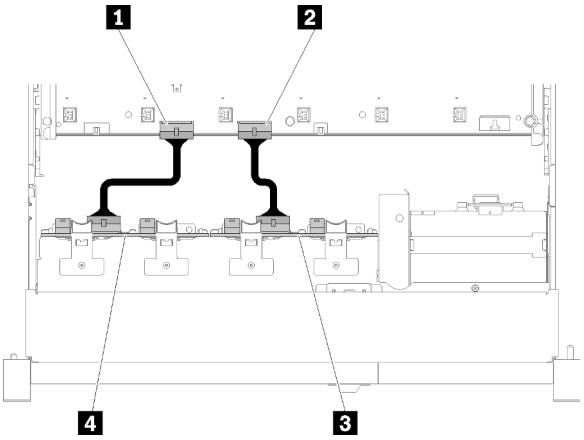

Figure 27. Location of power cable connectors on the system board

Table 25. Power cable connectors on the system board and the drive backplanes

1 Power cable connector on the system board	3 Power cable connector on the drive backplane
2 Power cable connector on the system board	4 Power cable connector on the drive backplane

Two types of drive backplanes are supported by this system:

- 2.5-inch SATA/SAS 8-bay backplane (referred to as “8-bay backplane”)
- 2.5-inch AnyBay 8-bay backplane (referred to as “AnyBay backplane”)

Connecting signal cables to one backplane

When one backplane is installed, see the following illustrations for cable routing.

One 8-bay backplane

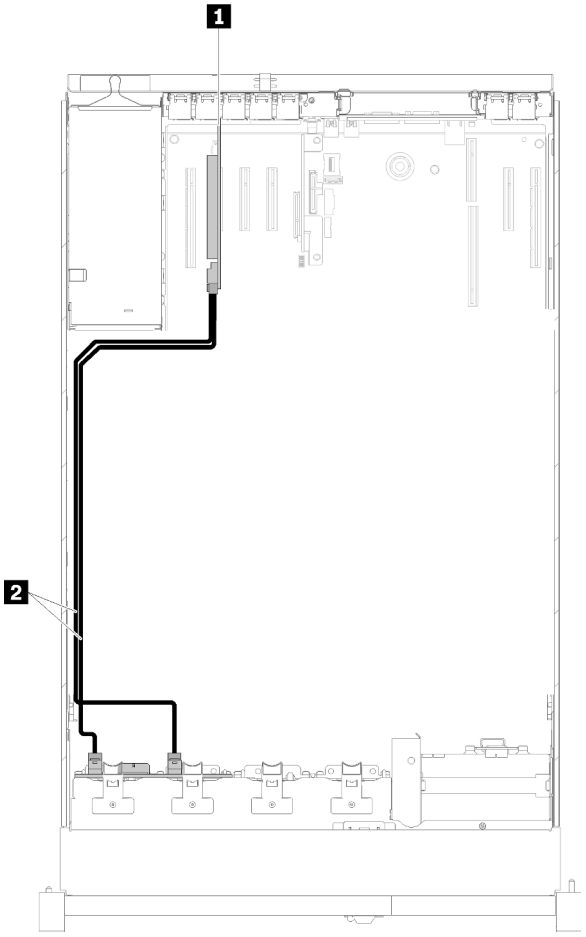

Figure 28. Cable routing, 8-bay backplane

Table 26. Cables and adapters for routing

1 SATA/SAS RAID adapter (8i)	2 SATA/SAS signal cables (720 mm)

One AnyBay backplane

Two processors installed

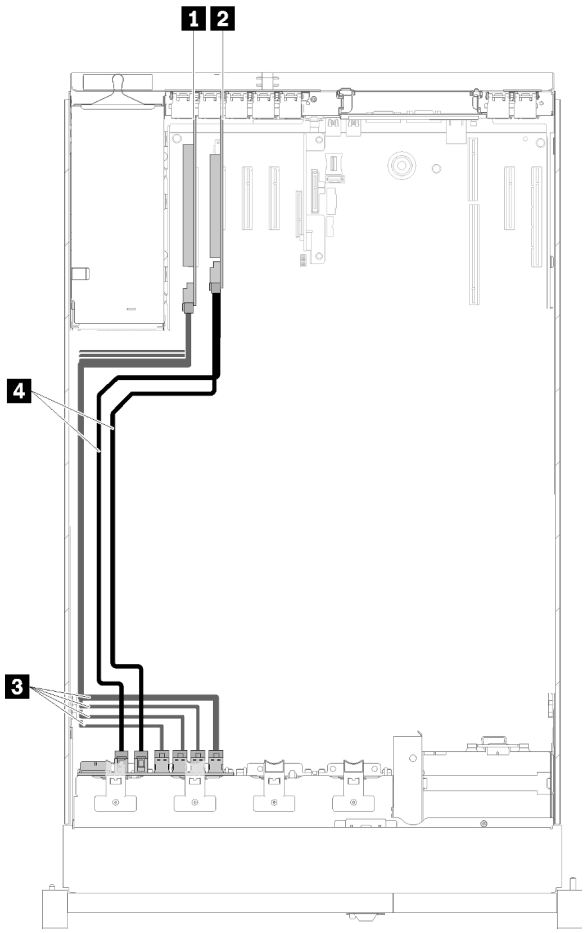

Figure 29. Cable routing, AnyBay backplane with two processors installed

Table 27. Cables and adapters for routing

1 PCIe switch card	3 NVMe signal cables for PCIe switch card
2 SATA/SAS RAID adapter (8i)	4 SATA/SAS signal cables (720 mm)

Four processors installed

Note: Install the processor and memory expansion tray before connecting the signal cables to NVMe connectors on the expansion tray (see "Install the processor and memory expansion tray" on page 122).

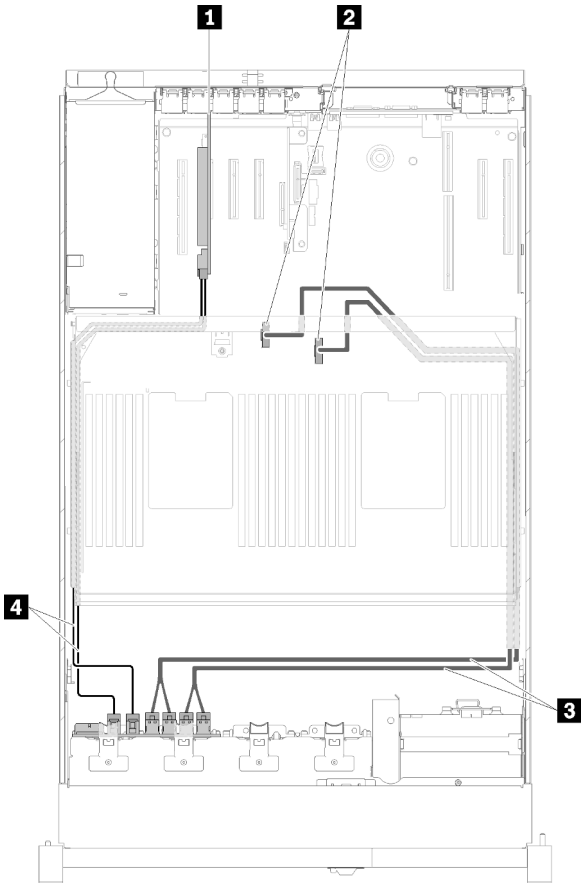

Figure 30. Cable routing, AnyBay backplane

Table 28. Cables and adapters for routing

1 SATA/SAS RAID adapter (8i)	3 Direct NVMe signal cables for processor and memory expansion tray
2 NVMe connectors on the processor and memory expansion tray	4 SATA/SAS signal cables (720 mm)

Connecting signal cables to two backplanes

When two backplanes are installed, see the following illustrations for cable routing.

8-bay backplane + 8-bay backplane

Two options are available for this combination:

1. With SATA/SAS RAID adapter (16i)

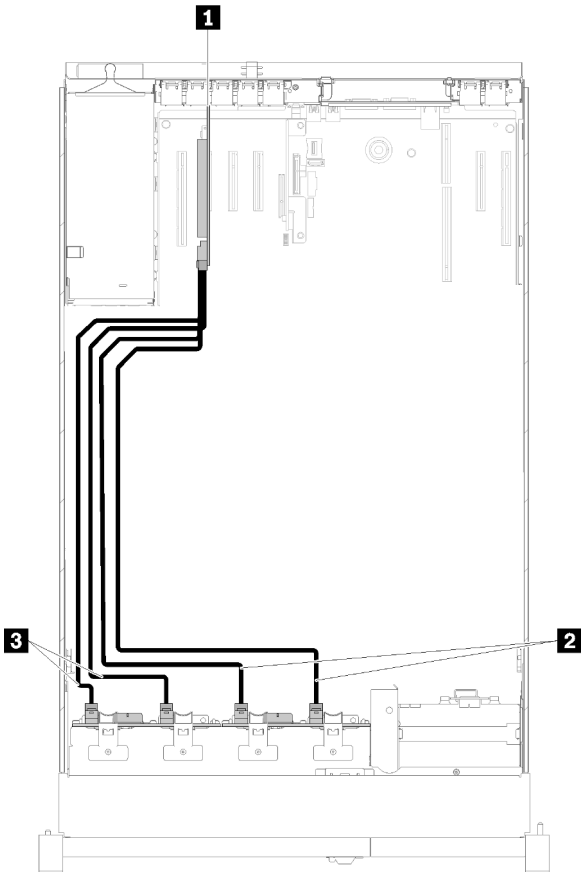

Figure 31. Cable routing, 8-bay backplane + 8-bay backplane

Table 29. Cables and adapters for routing

1 SATA/SAS RAID adapter (16i)	3 SATA/SAS signal cables (720 mm)
2 SATA/SAS signal cables (900 mm)	

2. With SATA/SAS RAID adapter (8i)

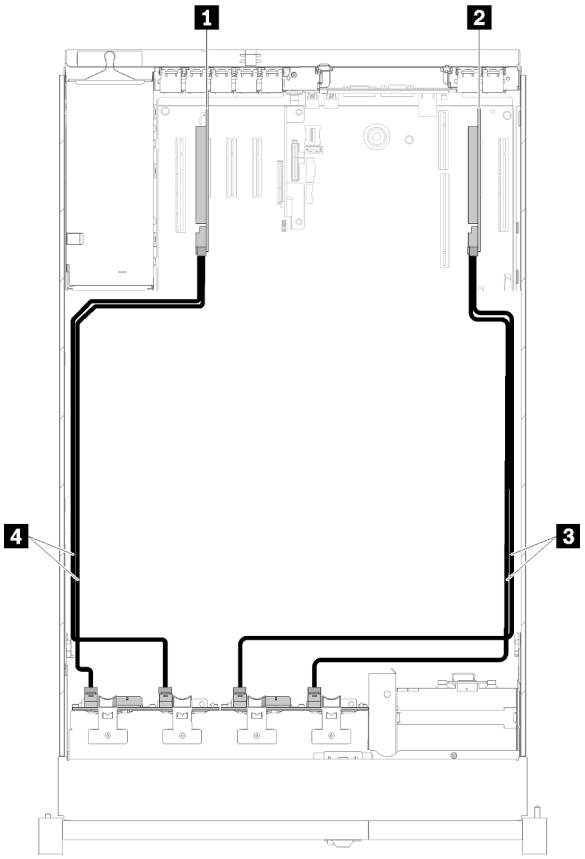

Figure 32. Cable routing, 8-bay backplane + 8-bay backplane

Table 30. Cables and adapters for routing

1 SATA/SAS RAID adapter (8i)	3 SATA/SAS signal cables (720 mm)
2 SATA/SAS RAID adapter (8i)	4 SATA/SAS signal cables (720 mm)

8-bay backplane + AnyBay backplane

Notes:

- When installing a 8-bay backplane and a AnyBay backplane, always install the 8-bay backplane to drive bay 0-7, and the AnyBay backplane to drive bay 8-15.
- Install the processor and memory expansion tray before connecting the signal cables to NVMe connectors on the expansion tray (see "Install the processor and memory expansion tray" on page 122).

Two processors installed

Two options are available for this combination:

1. With one SATA/SAS RAID adapter (16i)

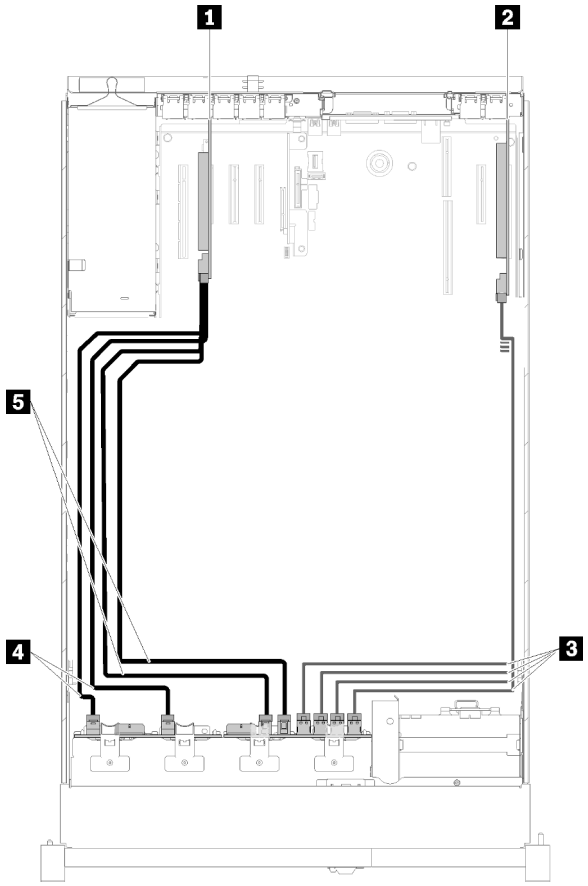

Figure 33. Cable routing, 8-bay backplane + AnyBay backplane

Table 31. Cables and adapters for routing

1 SATA/SAS RAID adapter (16i)	4 SATA/SAS signal cables (720 mm)
2 PCIe switch card	5 SATA/SAS signal cables (900 mm)
3 NVMe signal cables for PCIe switch card	

2. With two SATA/SAS RAID adapters (8i)

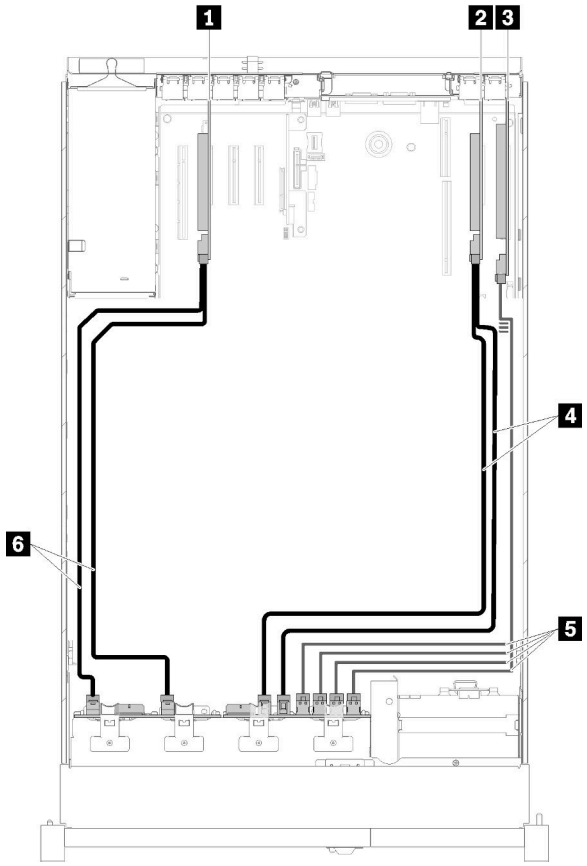

Figure 34. Cable routing, 8-bay backplane + AnyBay backplane

Table 32. Cables and adapters for routing

1 SATA/SAS RAID adapter (8i)	4 SATA/SAS signal cables (720 mm)
2 SATA/SAS RAID adapter (8i)	5 NVMe signal cables for PCIe switch card
3 PCIe switch card	6 SATA/SAS signal cables (720 mm)

Four processors installed

Two options are available for this combination:

1. With SATA/SAS RAID adapter (16i)

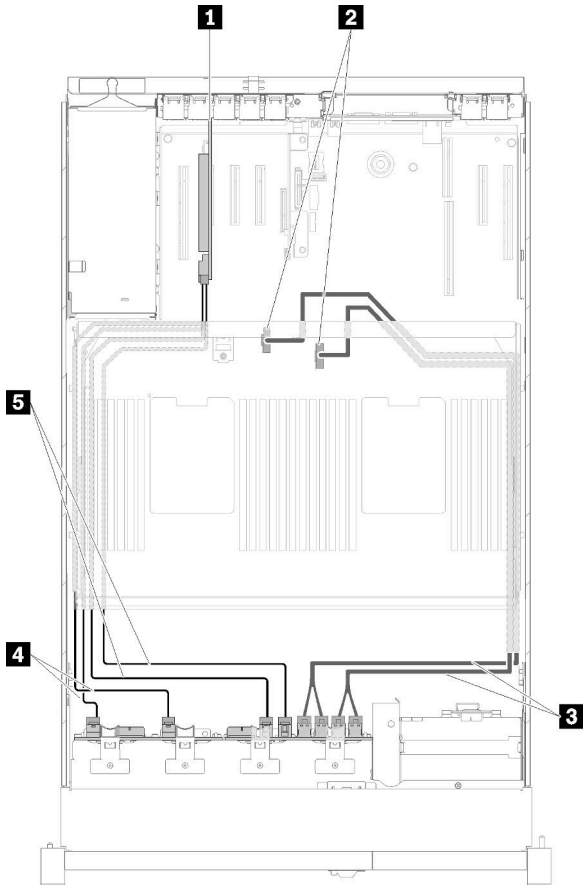

Figure 35. Cable routing, 8-bay backplane + AnyBay backplane

Table 33. Cables and adapters for routing

1 SATA/SAS RAID adapter (16i)	4 SATA/SAS signal cables (720 mm)
2 NVMe connectors on the processor and memory expansion tray	5 SATA/SAS signal cables (900 mm)
3 Direct NVMe signal cables for processor and memory expansion tray	

2. With SATA/SAS RAID adapter (8i)

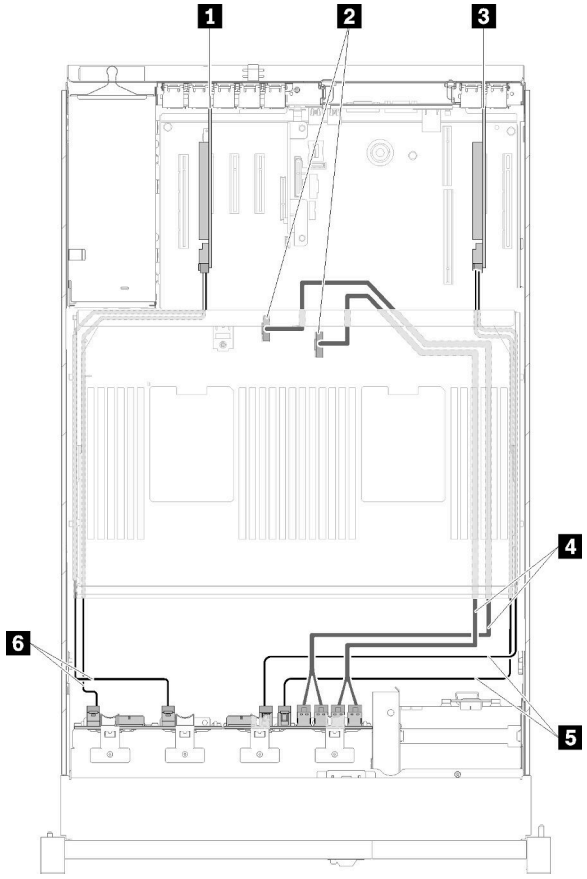

Figure 36. Cable routing, 8-bay backplane + AnyBay backplane

Table 34. Cables and adapters for routing

1 SATA/SAS RAID adapter (8i)	4 Direct NVMe signal cables for processor and memory expansion tray
2 NVMe connectors on the processor and memory expansion tray	5 SATA/SAS signal cables (720 mm)
3 SATA/SAS RAID adapter (8i)	6 SATA/SAS signal cables (720 mm)

AnyBay backplane + AnyBay backplane

Two processors installed

Two options are available for this combination:

1. With one SATA/SAS RAID adapter (16i)

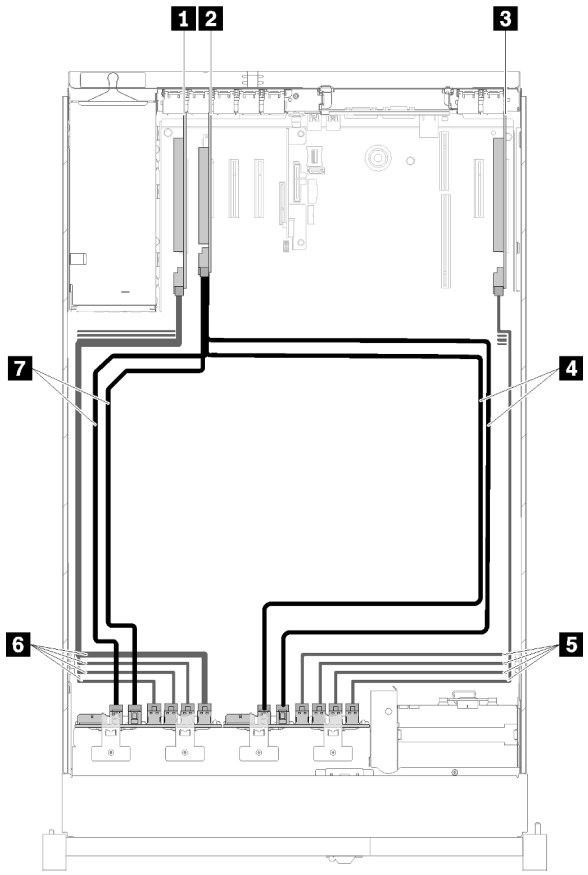

Figure 37. Cable routing, AnyBay backplane + AnyBay backplane

Table 35. Cables and adapters for routing

1 PCIe switch card	5 NVMe signal cables for PCIe switch card
2 SATA/SAS RAID adapter (16i)	6 NVMe signal cables for PCIe switch card
3 PCIe switch card	7 SATA/SAS signal cables (720 mm)
4 SATA/SAS signal cables (900 mm)	

2. With two SATA/SAS RAID adapters (8i)

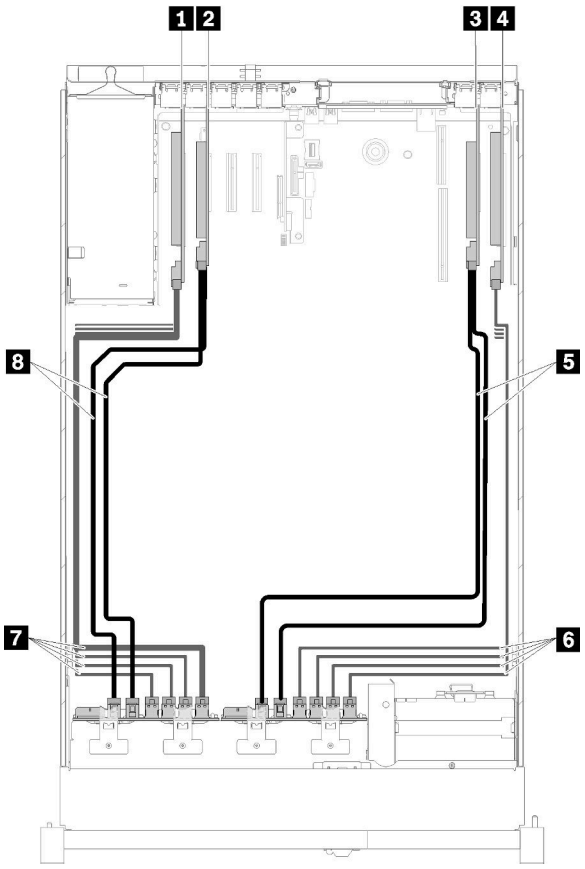

Figure 38. Cable routing, AnyBay backplane + AnyBay backplane

Table 36. Cables and adapters for routing

1 PCIe switch card	5 SATA/SAS signal cables (720 mm)
2 SATA/SAS RAID adapter (8i)	6 NVMe signal cables for PCIe switch card
3 SATA/SAS RAID adapter (8i)	7 NVMe signal cables for PCIe switch card
4 PCIe switch card	8 SATA/SAS signal cables (720 mm)

Four processors installed

Two options are available for this combination:

Note: Install the processor and memory expansion tray before connecting the signal cables to NVMe connectors on the expansion tray (see “Install the processor and memory expansion tray” on page 122).

1. With one SATA/SAS RAID adapter (16i)

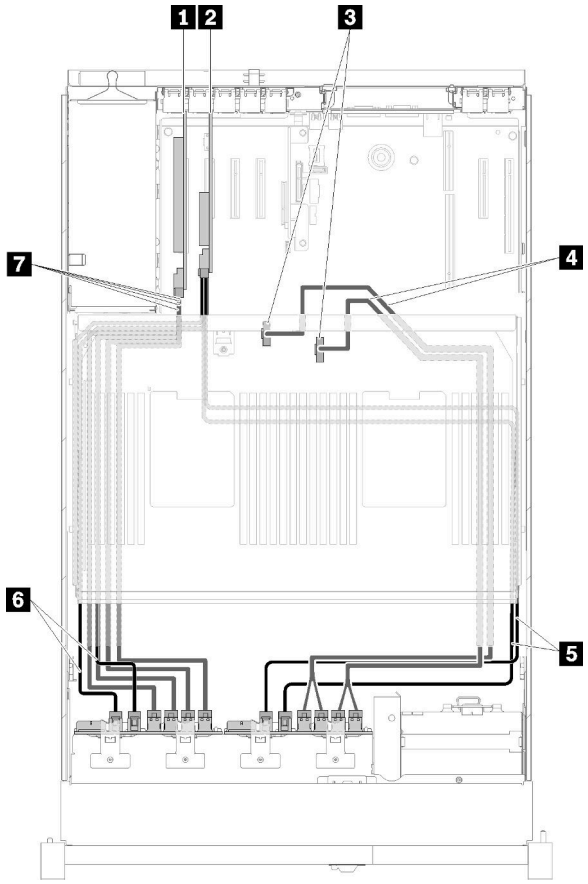

Figure 39. Cable routing, AnyBay backplane + AnyBay backplane

Table 37. Cables and adapters for routing

1 PCIe switch card	5 SATA/SAS signal cables (900 mm)
2 SATA/SAS RAID adapter (16i)	6 SATA/SAS signal cables (720 mm)
3 NVMe connectors on the processor and memory expansion tray	7 NVMe signal cables for PCIe switch card
4 Direct NVMe signal cables for processor and memory expansion tray	

2. With two SATA/SAS RAID adapters (8i)

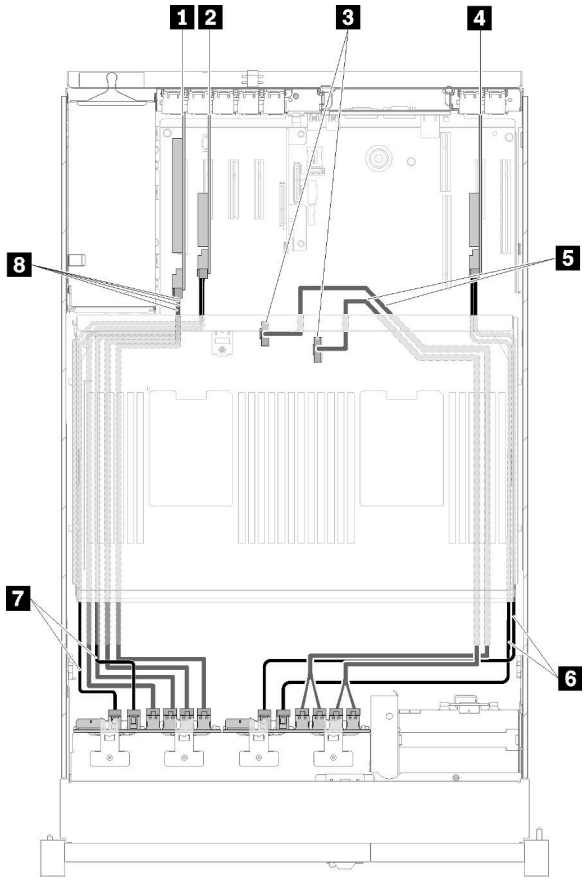

Figure 40. Cable routing, AnyBay backplane + AnyBay backplane

Table 38. Cables and adapters for routing

1 PCIe switch card	5 Direct NVMe signal cables for processor and memory expansion tray
2 SATA/SAS RAID adapter (8i)	6 SATA/SAS signal cables (720 mm)
3 NVMe connectors on the processor and memory expansion tray	7 SATA/SAS signal cables (720 mm)
4 SATA/SAS RAID adapter (8i)	8 NVMe signal cables for PCIe switch card

Parts list

Identify each of the components that is available for your server with the parts list.

For more information about ordering the parts shown in Figure 41 “Server components” on page 50:

1. Go to **http://datacentersupport.lenovo.com** and navigate to the support page for your server.
2. Click **Parts & Accessories → Parts Lookup**.
3. Enter either the serial number or the machine type model for your server to see the parts for your server.

Note: Depending on the model, your server might look slightly different from the illustration.

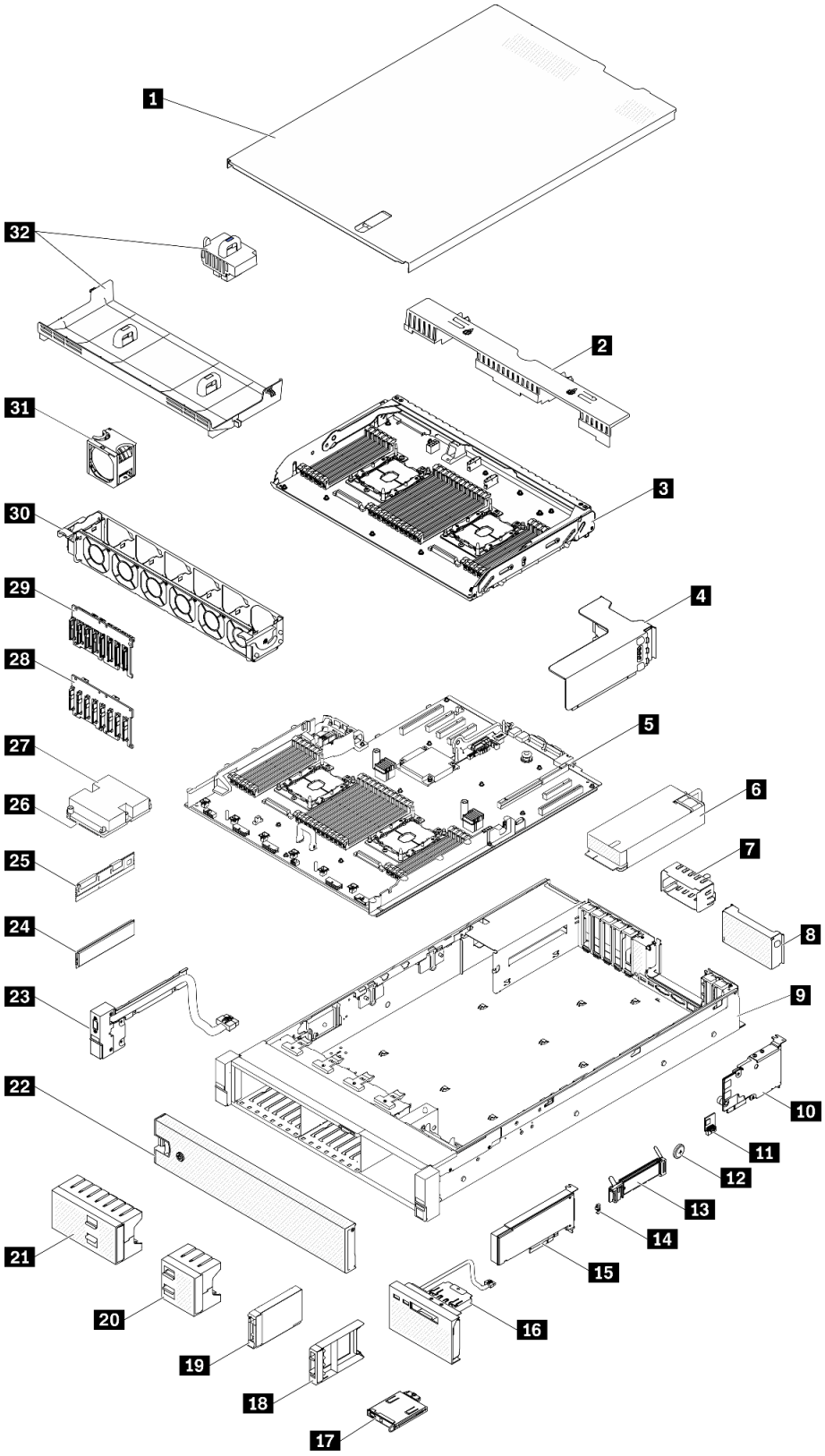

Figure 41. Server components

The parts listed in the following table are identified as one of the following:

- **Tier 1 customer replaceable unit (CRU):** Replacement of Tier 1 CRUs is your responsibility. If Lenovo installs a Tier 1 CRU at your request with no service agreement, you will be charged for the installation.
- **Tier 2 customer replaceable unit (CRU):** You may install a Tier 2 CRU yourself or request Lenovo to install it, at no additional charge, under the type of warranty service that is designated for your server.
- **Field replaceable unit (FRU):** FRUs must be installed only by trained service technicians.
- **Consumable and Structural parts:** Purchase and replacement of consumable and structural parts (components, such as a cover or bezel) is your responsibility. If Lenovo acquires or installs a structural component at your request, you will be charged for the service.

Table 39. Parts listing

Index	Description	Tier 1 CRU	Tier 2 CRU	FRU	Consumable and Structural part
For more information about ordering the parts shown in Figure 41 “server components” on page 50: http://datacentersupport.lenovo.com/products/servers/thinksystem/sr850/7x18/parts It is highly recommended that you check the power summary data for your server using Lenovo Capacity Planner before purchasing any new parts.					
1	Top cover	√			
2	Expansion tray air baffle	√			
3	Processor and memory expansion tray			√	
4	PCIe riser-card assembly	√			
5	System board			√	
6	Power supply unit	√			
7	Power supply filler	√			
8	PCIe riser-card filler				√
9	Chassis			√	
10	LOM adapter	√			
11	Trusted Cryptographic Module			√	
12	CMOS battery (CR2032)				√
13	M.2 backplane	√			
14	M.2 retainer clip	√			
15	PCIe adapter	√			
16	Operator panel tray assembly		√		
17	Front operator panel		√		
18	2.5-inch drive filler	√			
19	2.5-inch drive	√			
20	2.5-inch drive 4-bay filler	√			
21	2.5-inch drive 8-bay filler	√			

Table 39. Parts listing (continued)

Index	Description	Tier 1 CRU	Tier 2 CRU	FRU	Consumable and Structural part
22	Security bezel	√			
23	Front VGA assembly	√			
24	Memory module	√			
25	DC Persistent Memory (DCPMM)	√			
26	Processor			√	
27	Heatsink			√	
28	2.5-inch SATA/SAS 8-bay backplane	√			
29	2.5-inch AnyBay (SATA/SAS/NVMe) 8-bay backplane	√			
30	Fan cage	√			
31	Hot-swap fan	√			
32	System board air baffle and power interposer	√			

Power cords

Several power cords are available, depending on the country and region where the server is installed.

To view the power cords that are available for the server:

1. Go to:

   http://dcsc.lenovo.com/#/

2. Click **Preconfigured Model** or **Configure to order**.
3. Enter the machine type and model for your server to display the configurator page.
4. Click **Power → Power Cables** to see all line cords.

Notes:

- For your safety, a power cord with a grounded attachment plug is provided to use with this product. To avoid electrical shock, always use the power cord and plug with a properly grounded outlet.
- Power cords for this product that are used in the United States and Canada are listed by Underwriter's Laboratories (UL) and certified by the Canadian Standards Association (CSA).
- For units intended to be operated at 115 volts: Use a UL-listed and CSA-certified cord set consisting of a minimum 18 AWG, Type SVT or SJT, three-conductor cord, a maximum of 15 feet in length and a parallel blade, grounding-type attachment plug rated 15 amperes, 125 volts.
- For units intended to be operated at 230 volts (U.S. use): Use a UL-listed and CSA-certified cord set consisting of a minimum 18 AWG, Type SVT or SJT, three-conductor cord, a maximum of 15 feet in length and a tandem blade, grounding-type attachment plug rated 15 amperes, 250 volts.
- For units intended to be operated at 230 volts (outside the U.S.): Use a cord set with a grounding-type attachment plug. The cord set should have the appropriate safety approvals for the country in which the equipment will be installed.
- Power cords for a specific country or region are usually available only in that country or region.

Chapter 3. Hardware replacement procedures

This section provides installation and removal procedures for all serviceable system components. Each component replacement procedure references any tasks that need to be performed to gain access to the component being replaced.

For more information about ordering parts:

1. Go to **http://datacentersupport.lenovo.com** and navigate to the support page for your server.
2. Click **Service Parts**.
3. Enter the serial number to view a listing of parts for your server.

Note: If you replace a part, such as an adapter, that contains firmware, you might also need to update the firmware for that part. For more information about updating firmware, see "Firmware updates" on page 6.

Installation Guidelines

Before installing components in your server, read the installation guidelines.

Before installing optional devices, read the following notices carefully:

Attention: Prevent exposure to static electricity, which might lead to system halt and loss of data, by keeping static-sensitive components in their static-protective packages until installation, and handling these devices with an electrostatic-discharge wrist strap or other grounding system.

- Read the safety information and guidelines to ensure your safety at work:
  - A complete list of safety information for all products is available at:

    https://pubs.lenovo.com/safety_documentation/
  - The following guidelines are available as well: "Handling static-sensitive devices" on page 57 and "Working inside the server with the power on" on page 57.
- Make sure the components you are installing are supported by your server. For a list of supported optional components for the server, see https://serverproven.lenovo.com/.
- When you install a new server, download and apply the latest firmware. This will help ensure that any known issues are addressed, and that your server is ready to work with optimal performance. Go to ThinkSystem SR850 Drivers and Software to download firmware updates for your server.

  Important: Some cluster solutions require specific code levels or coordinated code updates. If the component is part of a cluster solution, verify the latest Best Recipe code level menu for cluster supported firmware and driver before you update the code.
- It is good practice to make sure that the server is working correctly before you install an optional component.
- Keep the working area clean, and place removed components on a flat and smooth surface that does not shake or tilt.
- Do not attempt to lift an object that might be too heavy for you. If you have to lift a heavy object, read the following precautions carefully:
  - Make sure that you can stand steadily without slipping.
  - Distribute the weight of the object equally between your feet.
  - Use a slow lifting force. Never move suddenly or twist when you lift a heavy object.

© Copyright Lenovo 2017, 2023

  - To avoid straining the muscles in your back, lift by standing or by pushing up with your leg muscles.
- Make sure that you have an adequate number of properly grounded electrical outlets for the server, monitor, and other devices.
- Back up all important data before you make changes related to the disk drives.
- Have a small flat-blade screwdriver, a small Phillips screwdriver, and a T8 torx screwdriver available.
- To view the error LEDs on the system board and internal components, leave the power on.
- You do not have to turn off the server to remove or install hot-swap power supplies, hot-swap fans, or hot-plug USB devices. However, you must turn off the server before you perform any steps that involve removing or installing adapter cables, and you must disconnect the power source from the server before you perform any steps that involve removing or installing a riser card.
- Blue on a component indicates touch points, where you can grip to remove a component from or install it in the server, open or close a latch, and so on.
- Terra-cotta on a component or a terra-cotta label on or near a component indicates that the component can be hot-swapped if the server and operating system support hot-swap capability, which means that you can remove or install the component while the server is still running. (Terra-cotta can also indicate touch points on hot-swap components.) See the instructions for removing or installing a specific hot-swap component for any additional procedures that you might have to perform before you remove or install the component.
- The Red strip on the drives, adjacent to the release latch, indicates that the drive can be hot-swapped if the server and operating system support hot-swap capability. This means that you can remove or install the drive while the server is still running.

  Note: See the system specific instructions for removing or installing a hot-swap drive for any additional procedures that you might need to perform before you remove or install the drive.
- After finishing working on the server, make sure you reinstall all safety shields, guards, labels, and ground wires.

System reliability guidelines

Review the system reliability guidelines to ensure proper system cooling and reliability.

Make sure the following requirements are met:

- When the server comes with redundant power, a power supply must be installed in each power-supply bay.
- Adequate space around the server must be spared to allow server cooling system to work properly. Leave approximately 50 mm (2.0 in.) of open space around the front and rear of the server. Do not place any object in front of the fans.
- For proper cooling and airflow, refit the server cover before you turn the power on. Do not operate the server for more than 30 minutes with the server cover removed, for it might damage server components.
- Cabling instructions that come with optional components must be followed.
- A failed fan must be replaced within 48 hours since malfunction.
- A removed hot-swap fan must be replaced within 30 seconds after removal.
- A removed hot-swap drive must be replaced within two minutes after removal.
- A removed hot-swap power supply must be replaced within two minutes after removal.
- Every air baffle that comes with the server must be installed when the server starts (some servers might come with more than one air baffle). Operating the server with a missing air baffle might damage the processor.
- All processor sockets must contain either a socket cover or a processor with heat sink.

- When more than one processor is installed, fan population rules for each server must be strictly followed.

Working inside the server with the power on

You might need to keep the power on with the server cover removed to look at system information on the display panel or to replace hot-swap components. Review these guidelines before doing so.

S033

CAUTION:
Hazardous energy present. Voltages with hazardous energy might cause heating when shorted with metal, which might result in spattered metal, burns, or both.

Attention: The server might stop and loss of data might occur when internal server components are exposed to static electricity. To avoid this potential problem, always use an electrostatic-discharge wrist strap or other grounding systems when working inside the server with the power on.

- Avoid loose-fitting clothing, particularly around your forearms. Button or roll up long sleeves before working inside the server.
- Prevent your necktie, scarf, badge rope, or long hair from dangling into the server.
- Remove jewelry, such as bracelets, necklaces, rings, cuff links, and wrist watches.
- Remove items from your shirt pocket, such as pens and pencils, in case they fall into the server as you lean over it.
- Avoid dropping any metallic objects, such as paper clips, hairpins, and screws, into the server.

Handling static-sensitive devices

Review these guidelines before you handle static-sensitive devices to reduce the possibility of damage from electrostatic discharge.

Attention: Prevent exposure to static electricity, which might lead to system halt and loss of data, by keeping static-sensitive components in their static-protective packages until installation, and handling these devices with an electrostatic-discharge wrist strap or other grounding system.

- Limit your movement to prevent building up static electricity around you.
- Take additional care when handling devices during cold weather, for heating would reduce indoor humidity and increase static electricity.
- Always use an electrostatic-discharge wrist strap or other grounding system, particularly when working inside the server with the power on.
- While the device is still in its static-protective package, touch it to an unpainted metal surface on the outside of the server for at least two seconds. This drains static electricity from the package and from your body.
- Remove the device from the package and install it directly into the server without putting it down. If it is necessary to put the device down, put it back into the static-protective package. Never place the device on the server or on any metal surface.
- When handling a device, carefully hold it by the edges or the frame.
- Do not touch solder joints, pins, or exposed circuitry.

- Keep the device from others' reach to prevent possible damages.

2.5-inch hot-swap drive and drive backplane replacement

Use this procedure to install or remove 2.5-inch hot-swap drives and drive backplanes.

Remove a drive backplane

Use this procedure to remove a drive backplane.

Before removing the drive backplane:

1. Read the safety information and installation guidelines (see "Safety" on page iii and "Installation Guidelines" on page 55).
2. Turn off the server and peripheral devices and disconnect the power cords and all external cables (see "Power off the server" on page 11).
3. If the server is installed in a rack, slide the server out on its rack slide rails to gain access to the top cover, or remove the server from the rack.
4. Remove the top cover (see "Remove the top cover" on page 145).

To remove the drive backplane, complete the following steps:

Step 1. Pull all the drives and fillers out slightly to disengage them from the backplane.

Step 2. Remove the fan cage assembly (see "Remove the fan cage assembly" on page 65).

Step 3. Disconnect all the signal cables and the power cable from the backplane.

Step 4. Lift and hold the retention latches on top of the backplane.

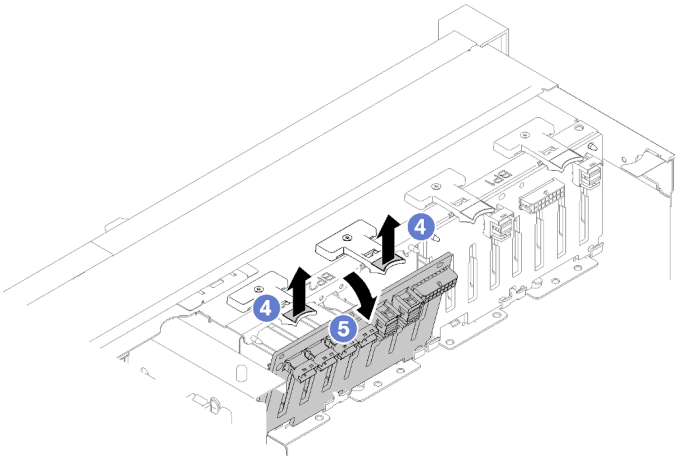

Figure 42. Drive backplane removal

Step 5. Rotate the backplane from the top toward the center of the server to disengage it from the retention latches.

If you are instructed to return the component or optional device, follow all packaging instructions, and use any packaging materials for shipping that are supplied to you.

Demo video

Watch the procedure on YouTube

Install a drive backplane

Use this procedure to install a drive backplane.

Before installing a drive backplane:

1. Read the safety information and installation guidelines (see “Safety” on page iii and “Installation Guidelines” on page 55).
2. Touch the static-protective package that contains the component to any unpainted metal surface on the server; then, remove it from the package and place it on a static-protective surface.

To install a drive backplane, complete the following steps:

Step 1. Align the tabs on the bottom of the drive backplane with the slots on the system board, and insert them into the slots.

Step 2. Push the top of the drive backplane toward the front of the server until it clicks in place.

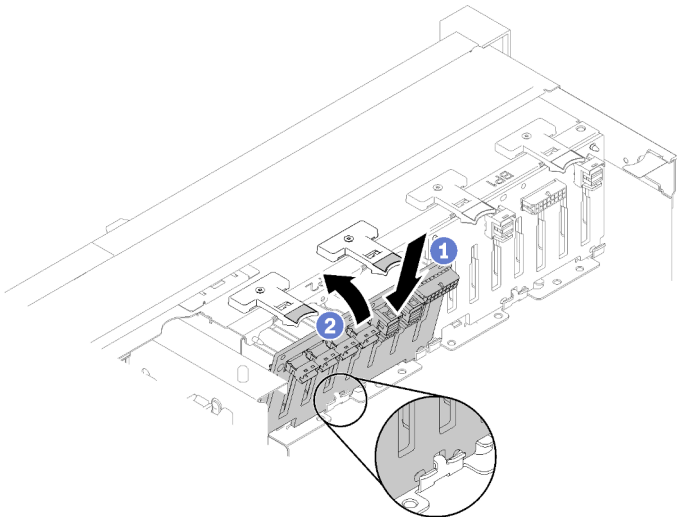

Figure 43. Drive backplane installation

After installing the drive backplane, complete the following steps:

1. Connect the cables to the drive backplane.
2. Install the drives (see “Install a 2.5-inch hot-swap drive” on page 60).
3. Reinstall the top cover (see “Install the top cover” on page 146).
4. Reconnect the power cords and any cables that you removed.
5. Install the server in the rack.
6. Power on the server and any peripheral devices.

Demo video

Watch the procedure on YouTube

Remove a 2.5-inch hot-swap drive

Use this procedure to remove a 2.5-inch hot-swap drive.

Before removing a 2.5-inch hot-swap drive:

1. Read the safety information and installation guidelines (see “Safety” on page iii and “Installation Guidelines” on page 55).
2. If one or more NVMe solid-state drives are to be removed, disable them beforehand in the operating system (see the documentation for your operating system for information and instructions). See the labels on the drive to determine the type of the drive to remove.

To remove a 2.5-inch drive, complete the following steps:

Step 1. Gently rotate the release latch away to unlock the drive handle.

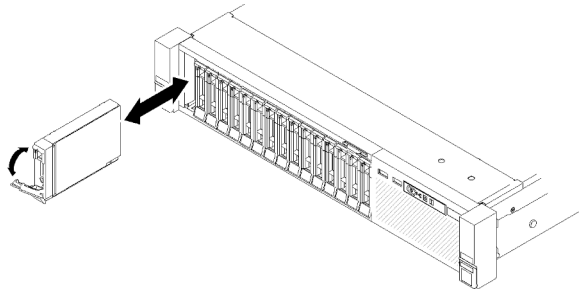

Figure 44. Drive removal

Step 2. Grasp the handle and pull the drive out of the drive bay.

If you are instructed to return the component or optional device, follow all packaging instructions, and use any packaging materials for shipping that are supplied to you.

Demo video

Watch the procedure on YouTube

Install a 2.5-inch hot-swap drive

Use this procedure to install a 2.5-inch drive.

Following are the types of drives supported by this server:

- NVMe solid-state drive
- SATA/SAS solid-state drive
- SATA/SAS hard-disk drive

For a complete list of supported optional device for this server, see https://serverproven.lenovo.com/.

Before installing a 2.5-inch hot-swap drive:

1. Read the safety information and installation guidelines (see “Safety” on page iii and “Installation Guidelines” on page 55).
2. Touch the static-protective package that contains the component to any unpainted metal surface on the server; then, remove it from the package and place it on a static-protective surface.

To install a 2.5-inch drive, complete the following steps:

Step 1. If new drives are to be added, see “Install a 2.5-inch drive” in *ThinkSystem SR850 Setup Guide* to determine available drive bays to the new drives.

Step 2. Gently rotate the release latch away to unlock the drive handle.

Step 3. Slide the drive into the drive bay, and push it until it stops.

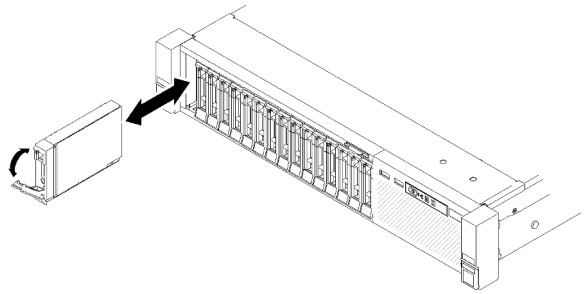

Figure 45. Drive installation

Step 4. Rotate the drive-tray handle back to the locked position.

After installing the 2.5-inch hot-swap drive, check the drive status LED to verify if the drive is operating correctly:

- If the yellow LED is lit continuously, it is malfunctioning and must be replaced.
- If the green LED is flashing, the drive is functioning.

Note: If the server is configured for RAID operation through a ThinkSystem RAID adapter, you might have to reconfigure your disk arrays after you install drives. See the ThinkSystem RAID adapter documentation for additional information about RAID operation and complete instructions for using ThinkSystem RAID adapters.

Demo video

Watch the procedure on YouTube

CMOS battery (CR2032) replacement

Use this procedure to remove or install the CMOS battery (CR2032).

Remove the CMOS battery (CR2032)

Use this procedure to remove the CMOS battery.

The following notes describe information that you must consider when replacing the battery:

- Lenovo has designed this product with your safety in mind. The lithium battery must be handled correctly to avoid possible danger. If you replace the battery, you must adhere to the following instructions.
- If you replace the original lithium battery with a heavy-metal battery or a battery with heavy-metal components, be aware of the following environmental consideration. Batteries and accumulators that contain heavy metals must not be disposed of with normal domestic waste. They will be taken back free of charge by the manufacturer, distributor, or representative, to be recycled or disposed of in a proper manner.
- After you replace the battery, you must reconfigure the server and reset the system date and time.

S002

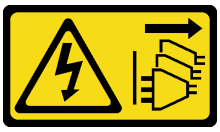

CAUTION:
The power-control button on the device and the power switch on the power supply do not turn off the electrical current supplied to the device. The device also might have more than one power cord. To remove all electrical current from the device, ensure that all power cords are disconnected from the power source.

S004

CAUTION:
When replacing the lithium battery, use only Lenovo specified part number or an equivalent type battery recommended by the manufacturer. If your system has a module containing a lithium battery, replace it only with the same module type made by the same manufacturer. The battery contains lithium and can explode if not properly used, handled, or disposed of.

Do not:

- **Throw or immerse into water**
- **Heat to more than 100°C (212°F)**
- **Repair or disassemble**

Dispose of the battery as required by local ordinances or regulations.

S005

CAUTION:
The battery is a lithium ion battery. To avoid possible explosion, do not burn the battery. Exchange it only with the approved part. Recycle or discard the battery as instructed by local regulations.

Before removing the CMOS battery:

1. Read the safety information and installation guidelines (see “Safety” on page iii and “Installation Guidelines” on page 55).
2. Turn off the server and peripheral devices and disconnect the power cords and all external cables (see “Power off the server” on page 11).
3. If the server is installed in a rack, slide the server out on its rack slide rails to gain access to the top cover, or remove the server from the rack.
4. Remove the top cover (see “Remove the top cover” on page 145).
5. Remove the system board air baffle (see “Remove the system board air baffle and the power interposer” on page 126) or the processor and memory expansion tray and the expansion tray air baffle (see “Remove the processor and memory expansion tray” on page 120).

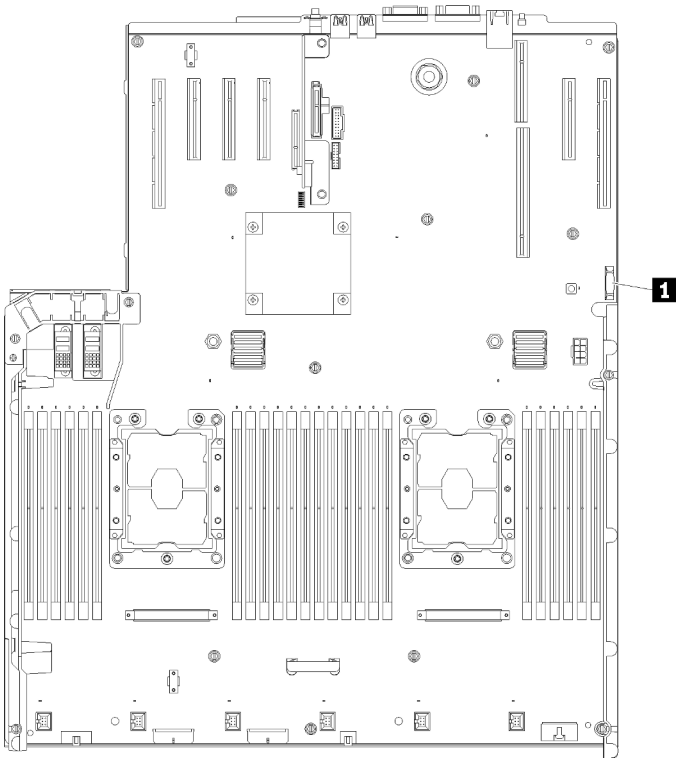

Figure 46. CMOS battery location on the system board

Table 40. CMOS battery

1	CMOS battery (CR2032)

To remove the CMOS battery, complete the following steps:

Step 1. Gently push on one side of the battery until it leaves the seat.

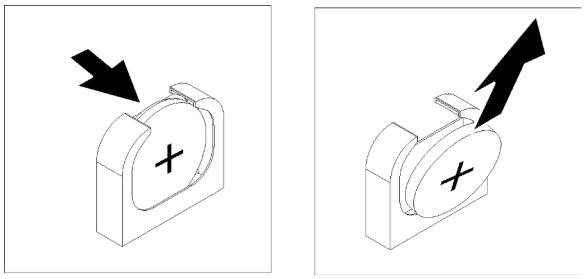

Figure 47. CMOS battery removal

Step 2. Use fingers to pick up the battery.

After removing the CMOS battery, dispose it according to local regulations.

Demo video

Watch the procedure on YouTube

Install the CMOS battery (CR2032)

Use this procedure to install the CMOS battery.

Consider the following notes when replacing the CMOS battery in the server:

- When replacing the CMOS battery, you must replace it with another CMOS battery of the same type from the same manufacturer.
- After you replace the CMOS battery, you must reconfigure the server and reset the system date and time.
- To avoid possible danger, read and follow the following safety statement.

S002

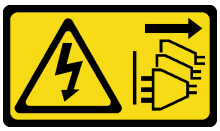

CAUTION:
The power-control button on the device and the power switch on the power supply do not turn off the electrical current supplied to the device. The device also might have more than one power cord. To remove all electrical current from the device, ensure that all power cords are disconnected from the power source.

S004

CAUTION:
When replacing the lithium battery, use only Lenovo specified part number or an equivalent type battery recommended by the manufacturer. If your system has a module containing a lithium battery, replace it only with the same module type made by the same manufacturer. The battery contains lithium and can explode if not properly used, handled, or disposed of.

Do not:

- **Throw or immerse into water**
- **Heat to more than 100°C (212°F)**
- **Repair or disassemble**

Dispose of the battery as required by local ordinances or regulations.

S005

CAUTION:
The battery is a lithium ion battery. To avoid possible explosion, do not burn the battery. Exchange it only with the approved part. Recycle or discard the battery as instructed by local regulations.

Before installing the CMOS battery:

1. Read the safety information and installation guidelines (see “Safety” on page iii and “Installation Guidelines” on page 55).
2. Touch the static-protective package that contains the component to any unpainted metal surface on the server; then, remove it from the package and place it on a static-protective surface.

To install the CMOS battery, complete the following steps:

Step 1. Follow any special handling and installation instructions that come with the replacement battery.

Step 2. Face the positive (+) symbol to the center of the server; then, place the battery into the seat until it clicks in place.

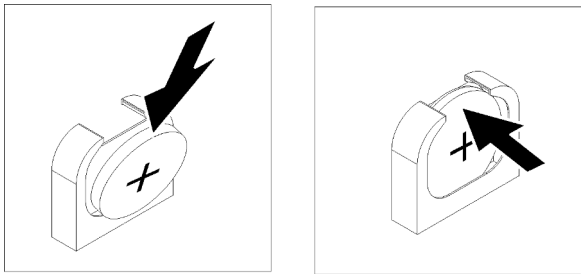

Figure 48. CMOS battery installation

After installing the CMOS battery, complete the following steps:

1. Reinstall the system board air baffle (see “Install the system board air baffle and the power interposer” on page 128) or processor and memory expansion tray and expansion tray air baffle (see “Install the processor and memory expansion tray” on page 122).
2. Reinstall the top cover (see “Install the top cover” on page 146).
3. Reconnect the power cords and any cables that you removed.
4. Install the server in the rack.
5. Power on the server and any peripheral devices.

Demo video

Watch the procedure on YouTube

Fan and fan cage replacement

Use this procedure to remove or install fan and fan cage assembly.

Remove the fan cage assembly

Use this procedure to remove the fan cage assembly.

S002

CAUTION:
The power-control button on the device and the power switch on the power supply do not turn off the electrical current supplied to the device. The device also might have more than one power cord. To remove all electrical current from the device, ensure that all power cords are disconnected from the power source.

S017

CAUTION:
Hazardous moving fan blades nearby. Keep fingers and other body parts away.

Before removing the fan cage assembly:

1. Read the safety information and installation guidelines (see “Safety” on page iii and “Installation Guidelines” on page 55).
2. Turn off the server and peripheral devices and disconnect the power cords and all external cables (see “Power off the server” on page 11).
3. If the server is installed in a rack, slide the server out on its rack slide rails to gain access to the top cover, or remove the server from the rack.
4. Remove the top cover (see “Remove the top cover” on page 145).

To remove the fan cage assembly, complete the following steps:

Step 1. Lift and rotate the fan cage release latches to disengage the fan cage assembly from the server.

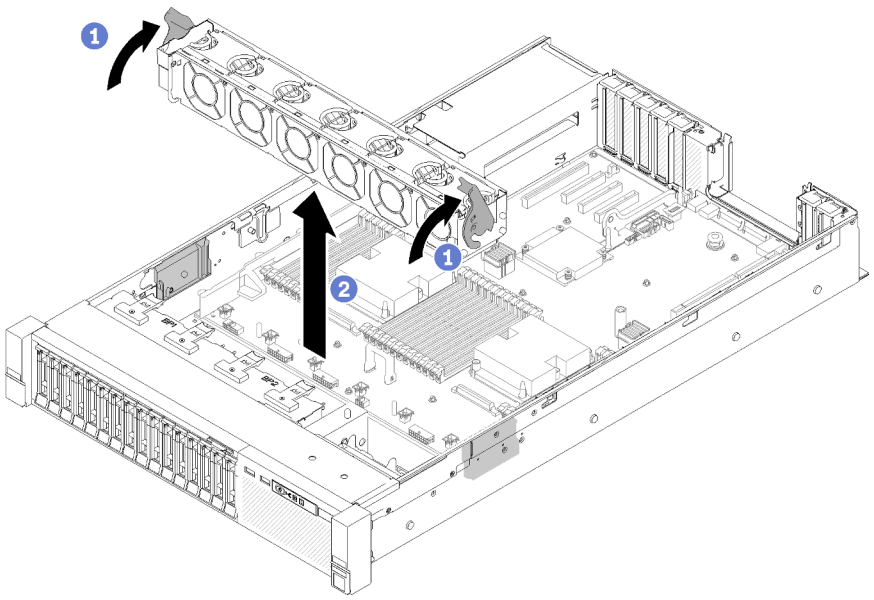

Figure 49. Fan cage assembly removal

Step 2. Lift the fan cage assembly from the server.

If you are instructed to return the component or optional device, follow all packaging instructions, and use any packaging materials for shipping that are supplied to you.

Demo video

Watch the procedure on YouTube

Install the fan cage assembly

Use this procedure to install the fan cage assembly.

Before installing the fan cage assembly:

1. Read the safety information and installation guidelines (see “Safety” on page iii and “Installation Guidelines” on page 55).
2. Touch the static-protective package that contains the component to any unpainted metal surface on the server; then, remove it from the package and place it on a static-protective surface.

To install the fan cage assembly, complete the following steps:

Step 1. Align the fan cage assembly to the slots on both sides of the server, and lower it into the server.

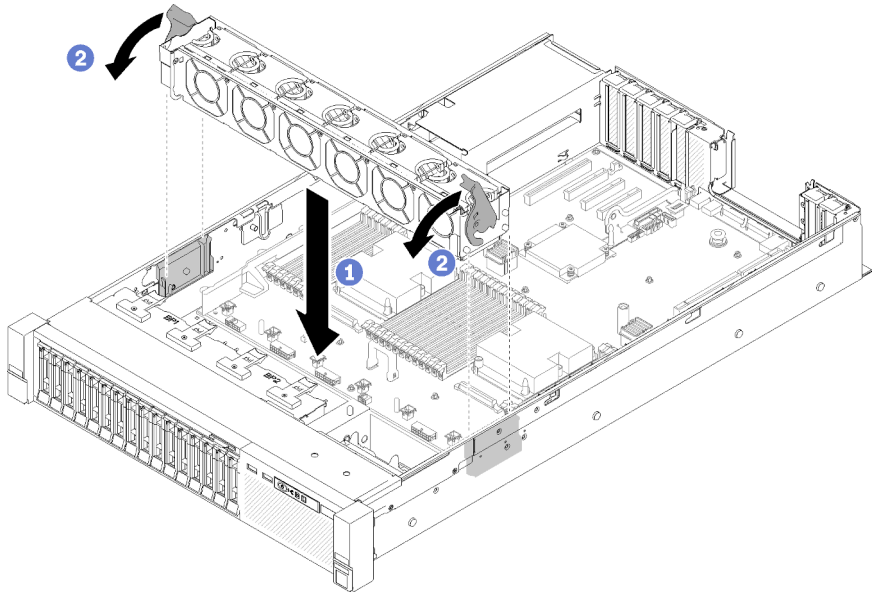

Figure 50. Fan cage assembly installation

Step 2. Rotate the fan cage release latches down until they stop.

After installing the fan cage assembly, complete the following steps:

1. Reinstall the top cover (see “Install the top cover” on page 146).
2. Reconnect the power cords and any cables that you removed.
3. Install the server in the rack.
4. Power on the server and any peripheral devices.

Demo video

Watch the procedure on YouTube

Remove a hot-swap fan

Use this procedure to remove a hot-swap fan.

S017

CAUTION:
Hazardous moving fan blades nearby. Keep fingers and other body parts away.

S033

CAUTION:
Hazardous energy present. Voltages with hazardous energy might cause heating when shorted with metal, which might result in spattered metal, burns, or both.

Before removing a hot-swap-fan:

1. Read the safety information and installation guidelines (see “Safety” on page iii and “Installation Guidelines” on page 55).
2. If the server is installed in a rack, slide the server out on its rack slide rails to gain access to the top cover, or remove the server from the rack.
3. Remove the top cover (see “Remove the top cover” on page 145).

To remove a hot-swap-fan, complete the following steps:

Step 1. Pinch on the top of the fan, and press on the latch to release the fan from the connector.

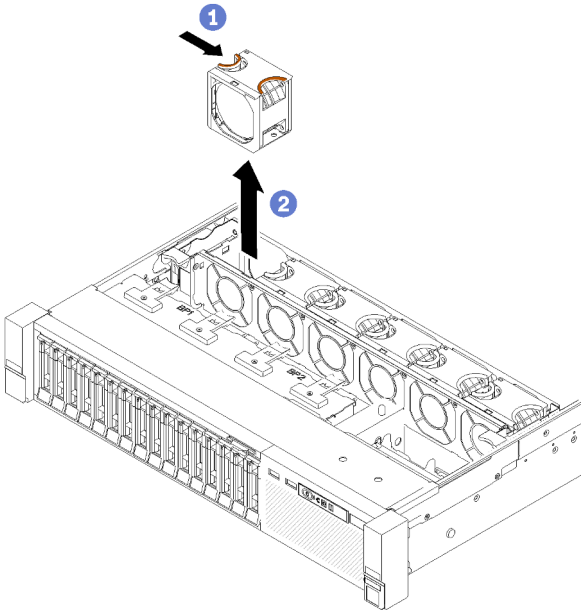

Figure 51. Hot-swap fan removal

Attention: When replacing a fan with power on, complete the replacement within 30 seconds to ensure proper operation.

Step 2. Lift the fan out from the fan cage.

If you are instructed to return the component or optional device, follow all packaging instructions, and use any packaging materials for shipping that are supplied to you.

Demo video

Watch the procedure on YouTube

Install a hot-swap fan

Use this procedure to install a hot-swap fan.

S017

CAUTION:
Hazardous moving fan blades nearby. Keep fingers and other body parts away.

S033

CAUTION:

Hazardous energy present. Voltages with hazardous energy might cause heating when shorted with metal, which might result in spattered metal, burns, or both.

The server comes with six speed-controlled hot-swap cooling fans. Before installing a hot-swap fan:

1. Read the safety information and installation guidelines (see “Safety” on page iii and “Installation Guidelines” on page 55).
2. Touch the static-protective package that contains the component to any unpainted metal surface on the server; then, remove it from the package and place it on a static-protective surface.

To install a hot-swap fan, complete the following steps:

Step 1. Align the fan over the fan slot in the fan cage assembly.

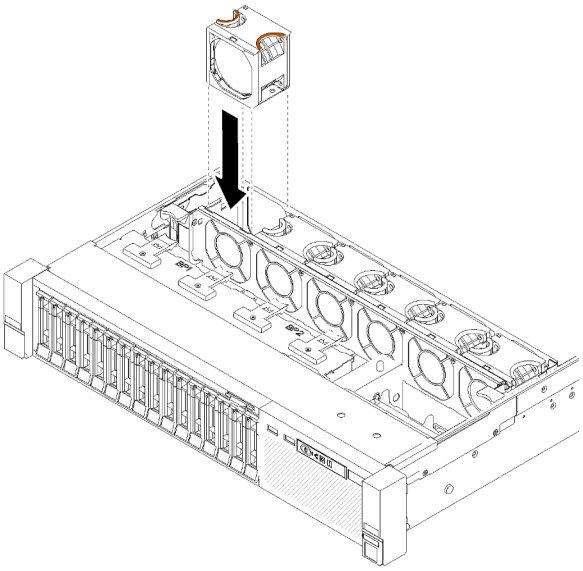

Figure 52. Hot-swap fan installation

Step 2. Insert the fan into the fan cage assembly until it clicks into place.

Attention: When replacing a fan with power on, complete the replacement within 30 seconds to ensure proper operation.

After installing the hot-swap fan, complete the following steps:

1. Reinstall the top cover (see “Install the top cover” on page 146).
2. Install the server in the rack.

Demo video

Watch the procedure on YouTube

Front VGA assembly replacement

Use this procedure to remove or install the front VGA assembly.

Remove the front VGA assembly

Use this procedure to remove the front VGA assembly.

Before removing the front VGA assembly:

1. Read the safety information and installation guidelines (see “Safety” on page iii and “Installation Guidelines” on page 55).
2. Turn off the server and peripheral devices and disconnect the power cords and all external cables (see “Power off the server” on page 11).
3. If the server is installed in a rack, slide the server out on its rack slide rails to gain access to the top cover, or remove the server from the rack.
4. Remove the top cover (see “Remove the top cover” on page 145).

To remove the front VGA assembly, complete the following steps:

Step 1. Remove the fan cage assembly (see “Remove the fan cage assembly” on page 65).

Step 2. Disconnect the VGA cable from the system board.

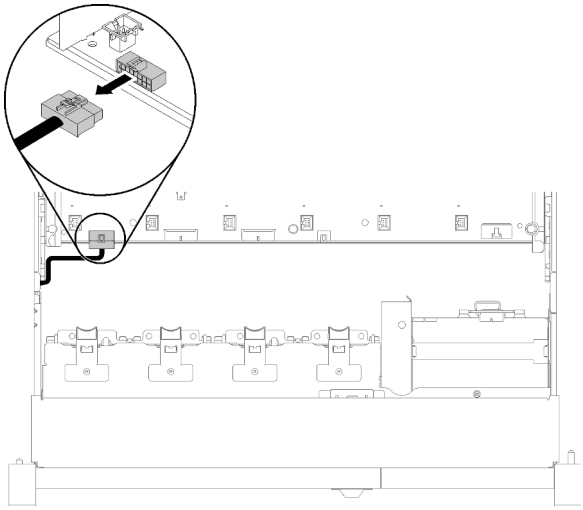

Figure 53. Location of the front VGA connector on the system board

Step 3. Remove the four screws that fix the front VGA assembly.

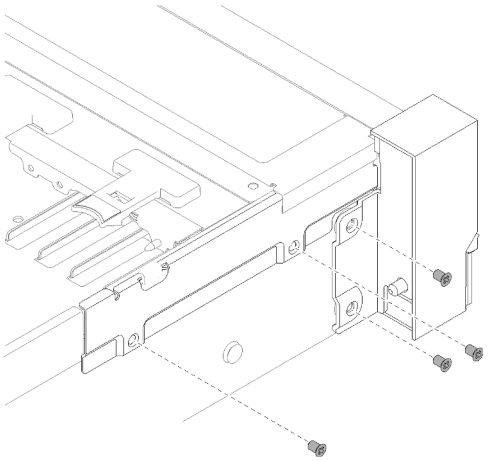

Figure 54. Front VGA assembly removal

Step 4. Tilt the cable cover and remove it from the server.

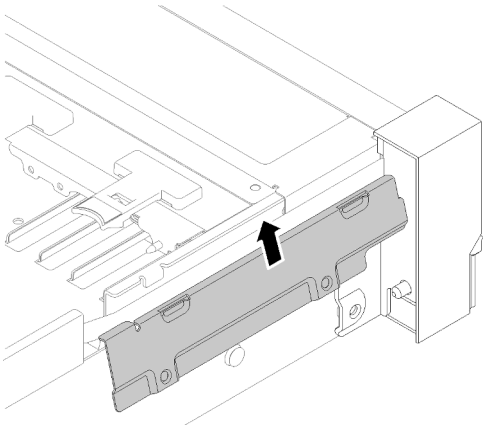

Figure 55. Front VGA assembly removal

Step 5. Grasp the front VGA assembly, and pull it slightly forward the front of the server to remove it.

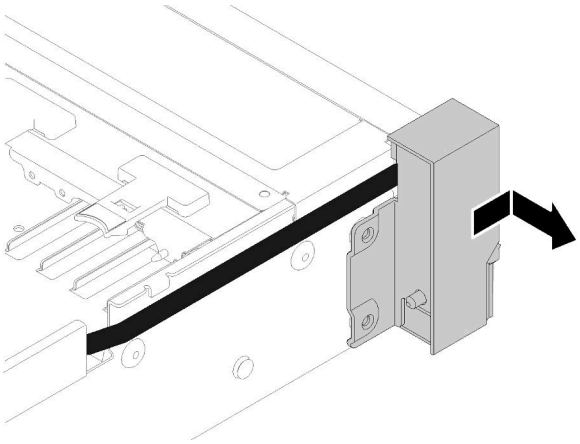

Figure 56. Front VGA assembly removal

If you are instructed to return the component or optional device, follow all packaging instructions, and use any packaging materials for shipping that are supplied to you.

Install the front VGA assembly

Use this procedure to install the front VGA assembly.

Before installing the front VGA assembly:

1. Read the safety information and installation guidelines (see “Safety” on page iii and “Installation Guidelines” on page 55).
2. Touch the static-protective package that contains the component to any unpainted metal surface on the server; then, remove it from the package and place it on a static-protective surface.

To install the front VGA assembly, complete the following steps:

Step 1. Remove the fan cage assembly (see “Remove the fan cage assembly” on page 65).

Step 2. Route the cable into the slot.

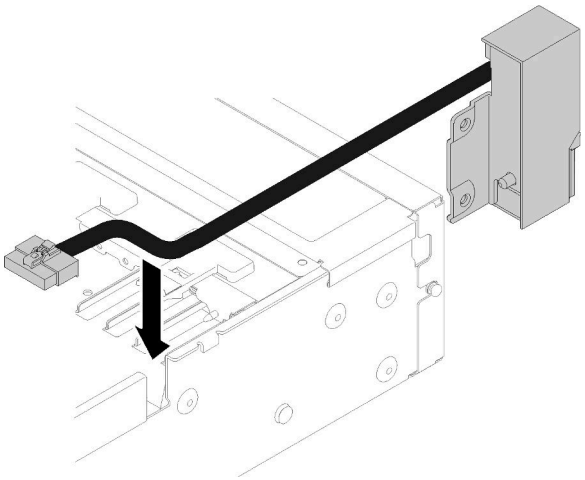

Figure 57. Front VGA assembly installation

Step 3. Align the front VGA assembly with the alignment pin, and push it slightly toward the rear of the server to it to the server.

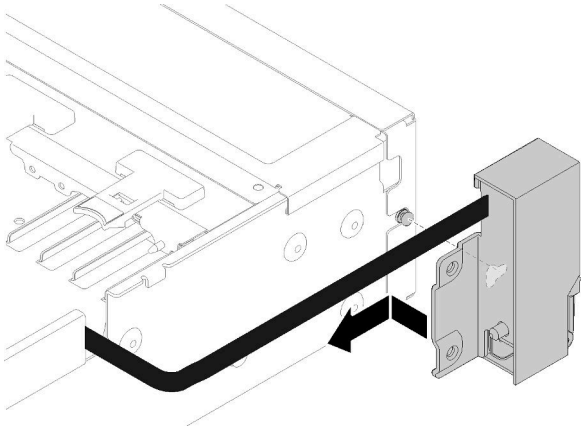

Figure 58. Front VGA assembly installation

Step 4. Tile and install the cable cover.

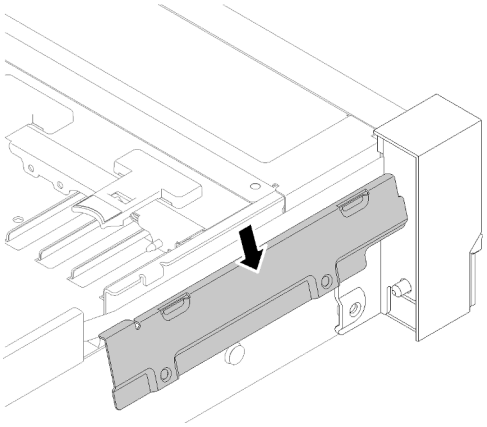

Figure 59. Front VGA assembly installation

Step 5. Install the front VGA assembly with four screws.

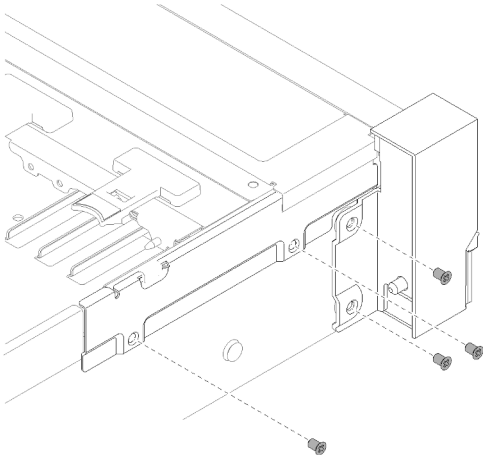

Figure 60. Front VGA assembly installation

Step 6. Connect the front video cable to the system board.

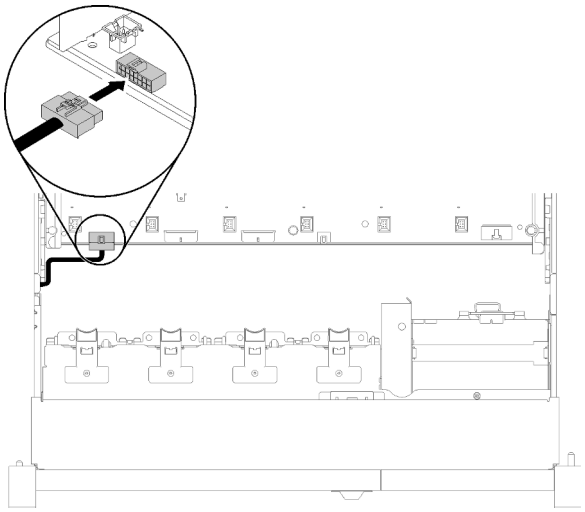

Figure 61. Front VGA assembly installation

After installing front VGA assembly, complete the following steps:

1. Reinstall the fan cage (see “Install the fan cage assembly” on page 67)
2. Reinstall the top cover (see “Install the top cover” on page 146).
3. Reconnect the power cords and any cables that you removed.
4. Power on the server and any peripheral devices.

LOM adapter replacement

Use the following procedures to remove and install the LOM adapter.

Remove the LOM adapter

Use this procedure to remove the LOM adapter.

Before removing the LOM adapter:

1. Read the safety information and installation guidelines (see “Safety” on page iii and “Installation Guidelines” on page 55).
2. Turn off the server and peripheral devices and disconnect the power cords and all external cables (see “Power off the server” on page 11).
3. If the server is installed in a rack, slide the server out on its rack slide rails to gain access to the top cover, or remove the server from the rack.
4. Remove the top cover (see “Remove the top cover” on page 145).

To remove the LOM adapter, complete the following steps:

Step 1. Loosen the captive thumbscrew.

Step 2. Open the retention latch.

Step 3. Remove the screw that fixes the LOM adapter.

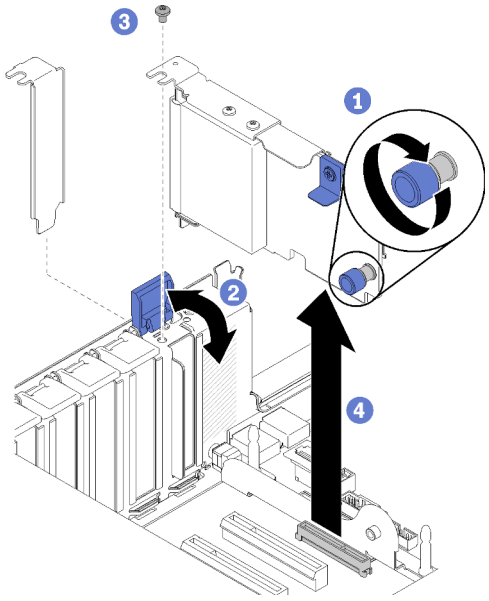

Figure 62. LOM adapter removal

Step 4. Carefully grasp the adapter and pull it out from the connector.

Step 5. Close the retention latch.

After removing the LOM adapter:

- If you are instructed to return the component or optional device, follow all packaging instructions, and use any packaging materials for shipping that are supplied to you.
- If you plan to recycle the adapter, separate the adapter from the bracket by removing the screws, and recycle the components with compliance to local regulations.

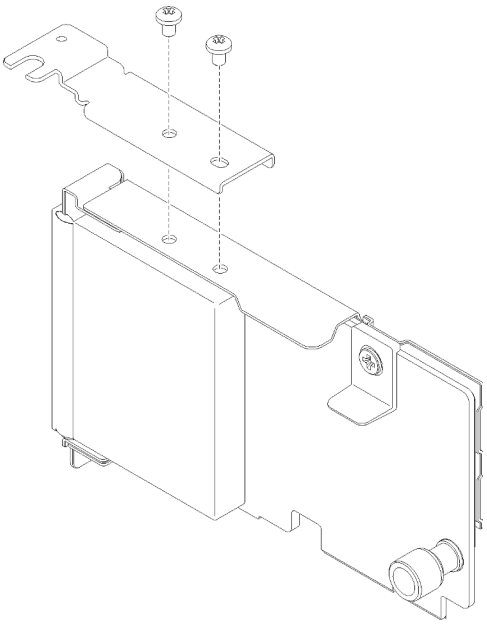

Figure 63. Disassembling the LOM adapter

Install the LOM adapter

Follow the instructions in this section to install the LOM adapter.

Note: When both LOM adapter and ML2 adapter are installed to the server, the system can support up to two additional network adapters.

Before installing the LOM adapter:

1. Read the safety information and installation guidelines (see “Safety” on page iii and “Installation Guidelines” on page 55).
2. Touch the static-protective package that contains the component to any unpainted metal surface on the server; then, remove it from the package and place it on a static-protective surface.
3. Make sure the LOM adapter to be installed supports the bandwidth of the network environment. Following are the requirements:
   - 1GbE LOM adapter: maximal bandwidth of network environment is 1GB.
   - 10GbE LOM adapter: minimal bandwidth of network environment is 1GB.
4. Attach the mounting bracket with the two screws as illustrated.

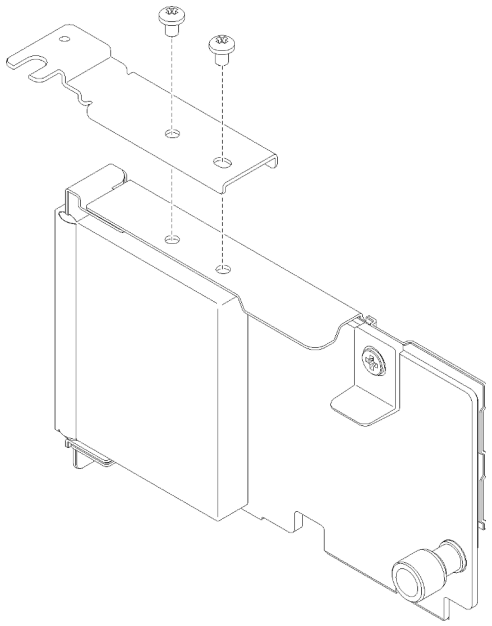

Figure 64. LOM adapter assembly

To install the LOM adapter, complete the following steps:

Step 1. Open the retention latch.

Step 2. Align the LOM adapter to the connector, and push it in.

Step 3. Tighten the captive thumbscrew to lock it to the system board.

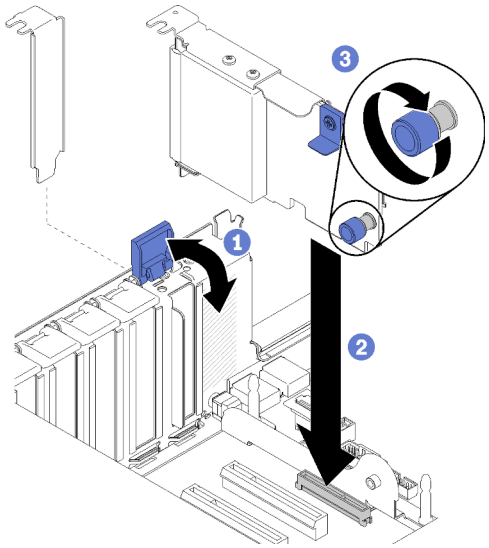

Figure 65. LOM adapter installation

Step 4. Close the retention latch.

After installing the LOM adapter, complete the following steps:

1. Reinstall the top cover (see "Install the top cover" on page 146).
2. Reconnect the power cords and any cables that you removed.
3. Power on the server and any peripheral devices.

M.2 drive and backplane replacement

Use this procedure to remove or install M.2 drives and backplane.

How to adjust the position of the retainer on the M.2 backplane

Use this information to adjust the position of the retainer on the M.2 backplane.

Before you adjust the position of the retainer on the M.2 backplane, complete the following steps:

1. Read the safety information and installation guidelines (see "Safety" on page iii and "Installation Guidelines" on page 55).
2. Touch the static-protective package that contains the component to any unpainted metal surface on the server; then, remove it from the package and place it on a static-protective surface.

To adjust the position of the retainer on the M.2 backplane, complete the following steps:

Step 1. Locate the correct keyhole that the retainer should be installed into to accommodate the particular size of the M.2 drive you wish to install.

Step 2. Press both sides of the retainer and move it forward until it is in the large opening of the keyhole; then, remove it from the backplane.

Step 3. Insert the retainer into the correct keyhole and slide it backwards until the nubs are in the holes.

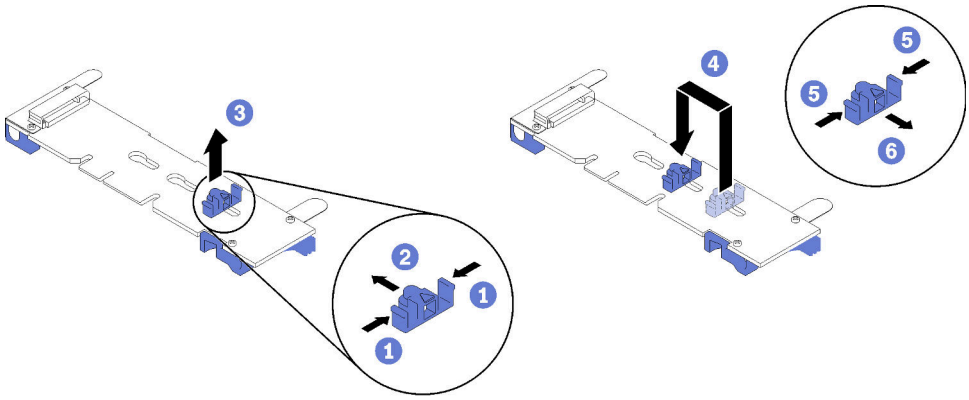

Figure 66. M.2 retainer adjustment

Remove the M.2 backplane

Use this procedure to remove the M.2 backplane.

Before removing the M.2 backplane:

1. Read the safety information and installation guidelines (see "Safety" on page iii and "Installation Guidelines" on page 55).
2. Turn off the server and peripheral devices and disconnect the power cords and all external cables (see "Power off the server" on page 11).
3. If the server is installed in a rack, slide the server out on its rack slide rails to gain access to the top cover, or remove the server from the rack.
4. Remove the top cover (see "Remove the top cover" on page 145).
5. Disconnect the USB 3.0 cable of operator panel tray assembly, and remove it vertically from the system board.

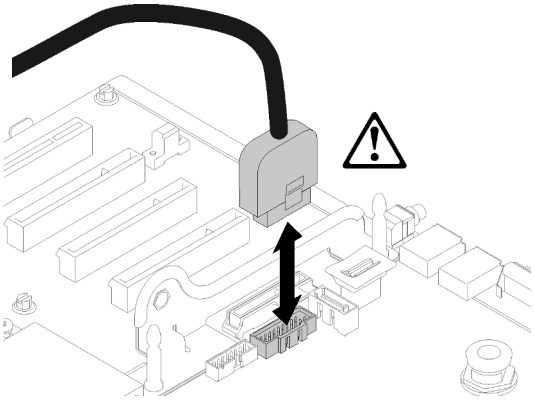

Figure 67. Removing USB 3.0 connector vertically

6. Remove PCIe riser-card if necessary (see "Remove the PCIe riser-card assembly" on page 93).
7. Remove LOM adapter if necessary (see "Remove the LOM adapter" on page 75).

To remove the M.2 backplane, complete the following steps:

Step 1. Remove the M.2 backplane from the system board by pulling up on both ends of the backplane at the same time.

Note: Pull the M.2 backplane straight up when removing it from the system board.

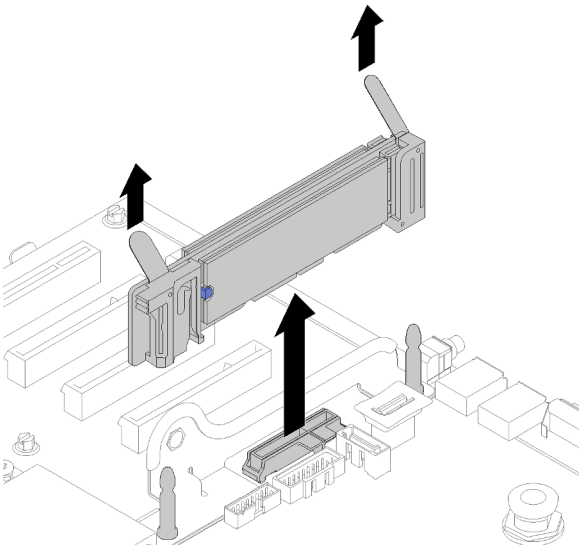

Figure 68. M.2 backplane removal

To remove an M.2 drive from the M.2 backplane, see “Remove an M.2 drive from the M.2 backplane” on page 82.

If you are instructed to return the component or optional device, follow all packaging instructions, and use any packaging materials for shipping that are supplied to you.

Install the M.2 backplane

Use this procedure to install the M.2 backplane.

Before installing the M.2 backplane:

1. Read the safety information and installation guidelines (see “Safety” on page iii and “Installation Guidelines” on page 55).
2. Install an M.2 drive to every available connector on the M.2 backplane (see “Install an M.2 drive in the M.2 backplane” on page 82).
3. Touch the static-protective package that contains the component to any unpainted metal surface on the server; then, remove it from the package and place it on a static-protective surface.
4. Disconnect the USB 3.0 cable of operator panel tray assembly, and remove it vertically from the system board.

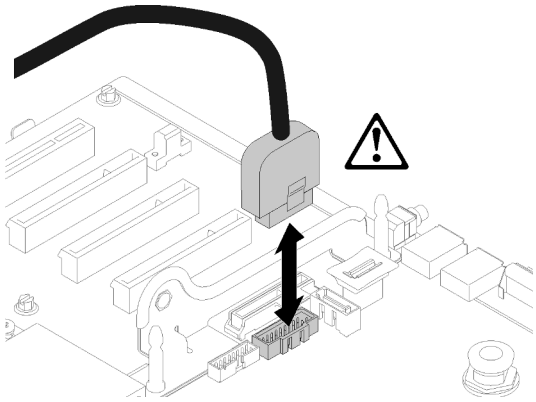

Figure 69. Removing USB 3.0 connector vertically

To install the M.2 backplane, complete the following steps:

Note: Before installing the M.2 backplane, make sure an M.2 drive is installed to every available connector on the M.2 backplane.

Step 1. Align the openings located at the bottom of the blue plastic supports at each end of the M.2 backplane with the guide pin on the system board and T-head pins on the hard drive cage; then, insert the backplane in the system board connector. Press down on the M.2 backplane to fully seat it.

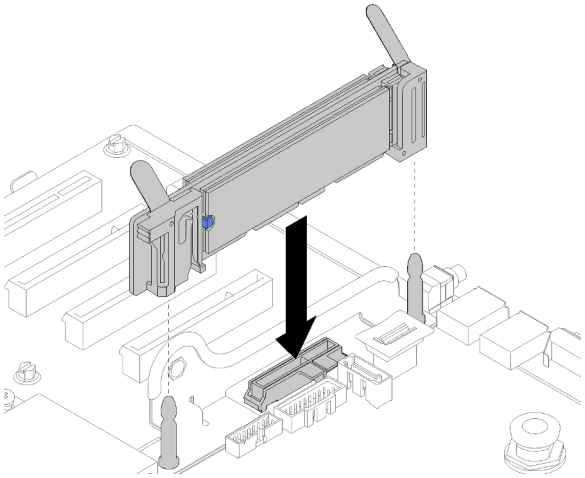

Figure 70. M.2 backplane installation

After installing the M.2 backplane, complete the following steps:

1. Reinstall the PCIe riser-card if necessary (see “Install the PCIe riser-card assembly” on page 96).
2. Reinstall the LOM adapter if necessary (see “Install the LOM adapter” on page 77).
3. Reinstall the top cover (see “Install the top cover” on page 146).
4. Reconnect the power cords and any cables that you removed.
5. Install the server in the rack.
6. Power on the server and any peripheral devices.

Remove an M.2 drive from the M.2 backplane

Use this procedure to remove an M.2 drive from the M.2 backplane.

With M.2 backplane removed, complete the following steps to remove an M.2 drive from the M.2 backplane:

Step 1. Press both sides of the retainer and slide it backward to loosen the M.2 drive from the M.2 backplane.

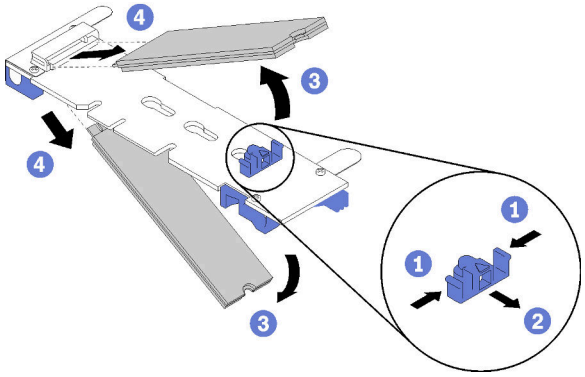

Figure 71. M.2 drive removal

Note: If your M.2 backplane has two M.2 drives, they will both release outward when you slide the retainer backward.

Step 2. Remove the M.2 drive by rotating it away from the M.2 backplane and pulling away from the connector at an angle (approximately 30 degrees).

If you are instructed to return the component or optional device, follow all packaging instructions, and use any packaging materials for shipping that are supplied to you.

Install an M.2 drive in the M.2 backplane

Use this procedure to install an M.2 drive in the M.2 backplane.

Before installing an M.2 drive in the M.2 backplane:

1. Read the safety information and installation guidelines (see “Safety” on page iii and “Installation Guidelines” on page 55).
2. Touch the static-protective package that contains the component to any unpainted metal surface on the server; then, remove it from the package and place it on a static-protective surface.

To install an M.2 drive in the M.2 backplane, complete the following steps:

Step 1. Locate the connector on each side of the M.2 backplane.

Notes:

- Some M.2 backplanes support two M.2 drives. When two drives are installed, align and support both drives when sliding the retainer forward to secure the drives.
- Install the M.2 drive in slot 0 first.
- Make sure to install a 480 GB M.2 drive into the M.2 backplane that supports two M.2 drives.

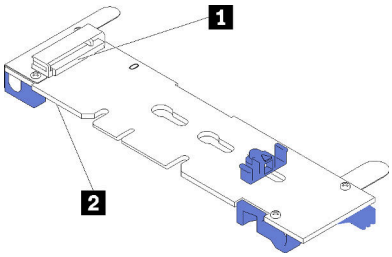

Figure 72. M.2 drive slots

Table 41. M.2 drive slots

1 **Slot 0**	2 **Slot 1**

Step 2. Insert the M.2 drive at an angle (approximately 30 degrees) into the connector and rotate it until the notch catches on the lip of the retainer; then, slide the retainer forward (toward the connector) to secure the M.2 drive in the M.2 backplane.

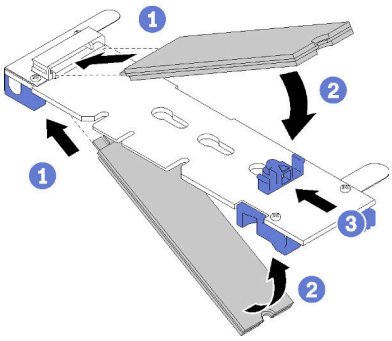

Figure 73. M.2 drive installation

Attention: When sliding the retainer forward, make sure the two nubs on the retainer enter the small holes on the M.2 backplane. Once they enter the holes, you will hear a soft “click” sound.

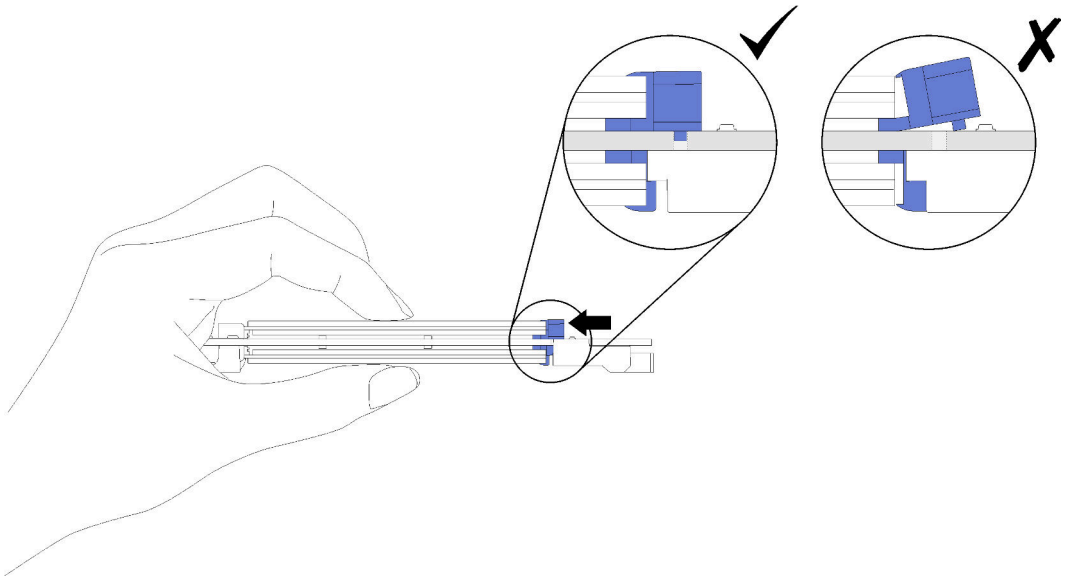

Figure 74. M.2 drive installation with the retainers in place

After installing an M.2 drive in the M.2 backplane, see “Install the M.2 backplane” on page 80 to complete installation.

Memory module replacement

Use this procedure to remove or install a memory module.

Remove a memory module

Use this procedure to remove a memory module.

“**ATTENTION: Static Sensitive Device** Ground package before opening” on page 57

Attention: Memory modules are sensitive to static discharge and require special handling. In addition to the standard guidelines for “Handling static-sensitive devices” on page 57:

- Always wear an electrostatic-discharge strap when removing or installing memory modules. Electrostatic-discharge gloves can also be used.
- Never hold two or more memory modules together so that they touch. Do not stack memory modules directly on top of each other during storage.
- Never touch the gold memory module connector contacts or allow these contacts to touch the outside of the memory-module connector housing.
- Handle memory modules with care: never bend, twist, or drop a memory module.

Before removing a memory module:

1. If you are removing a DCPMM in App Direct or Mixed Memory Mode, make sure to back up the stored data, and delete any created namespace.
2. Read the safety information and installation guidelines (see “Safety” on page iii and “Installation Guidelines” on page 55).
3. Turn off the server and peripheral devices and disconnect the power cords and all external cables (see “Power off the server” on page 11).
4. If the server is installed in a rack, slide the server out on its rack slide rails to gain access to the top cover, or remove the server from the rack.
5. Remove the top cover (see “Remove the top cover” on page 145).
6. If you are not replacing the memory module that you removed, see the *ThinkSystem SR850 Memory Population Reference* for the required installation order of the remaining memory modules.
7. If you are removing memory modules from the processor and memory expansion tray, **do not** remove the expansion tray. Only remove the air baffle that is installed on the expansion tray.

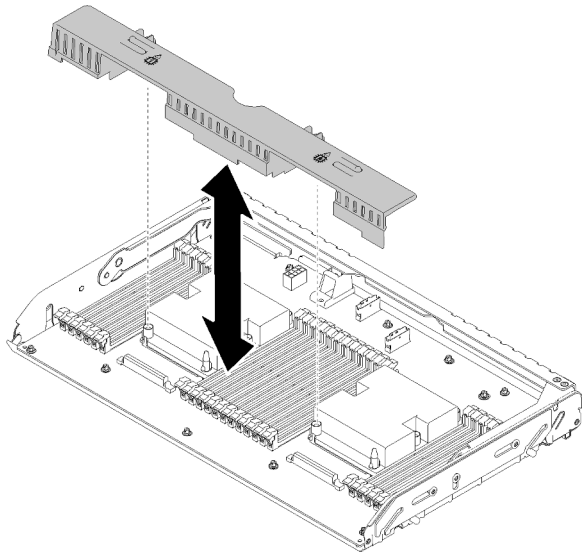

Figure 75. Air baffle removal from the processor and memory expansion tray

8. If you are removing memory modules from the system board, make sure to remove the expansion tray (see “Remove the processor and memory expansion tray” on page 120) and the air baffle that is installed on the system board.

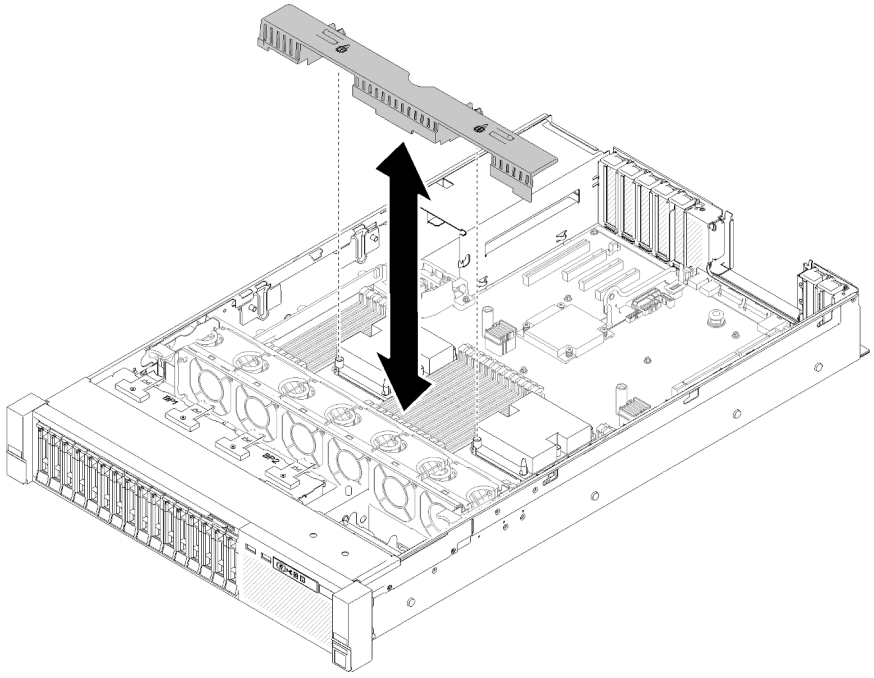

Figure 76. Air baffle removal from the system board

Complete the following steps to remove a memory module.

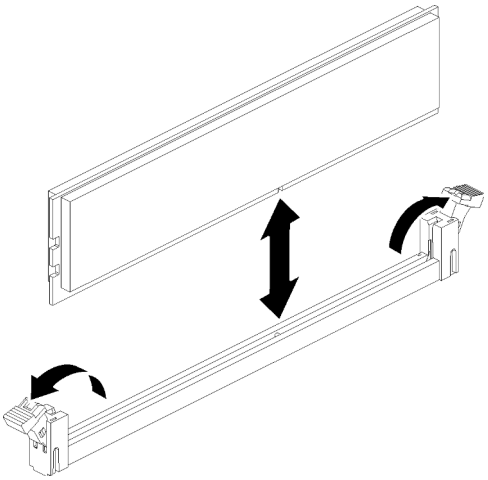

Figure 77. Memory module removal

Step 1. Open the memory module connector retaining clips to extract the memory module; then, remove the memory module.

If you are instructed to return the component or optional device, follow all packaging instructions, and use any packaging materials for shipping that are supplied to you.

Demo video

Watch the procedure on YouTube

Install a memory module

Use this procedure to install a memory module.

"**ATTENTION: Static Sensitive Device** Ground package before opening" on page 57

See "Memory module installation order" in *Setup Guide* for detailed information about memory configuration and setup.

Attention: Memory modules are sensitive to static discharge and require special handling. In addition to the standard guidelines for "Handling static-sensitive devices" on page 57:

- Always wear an electrostatic-discharge strap when removing or installing memory modules. Electrostatic-discharge gloves can also be used.
- Never hold two or more memory modules together so that they touch. Do not stack memory modules directly on top of each other during storage.
- Never touch the gold memory module connector contacts or allow these contacts to touch the outside of the memory-module connector housing.
- Handle memory modules with care: never bend, twist, or drop a memory module.

Before installing a memory module:

1. Read the safety information and installation guidelines (see "Safety" on page iii and "Installation Guidelines" on page 55).

2. Touch the static-protective package that contains the component to any unpainted metal surface on the server; then, remove it from the package and place it on a static-protective surface.
3. If you are installing memory modules on the processor and memory expansion tray, **do not** remove the expansion tray. Only remove the air baffle that is installed on the expansion tray.

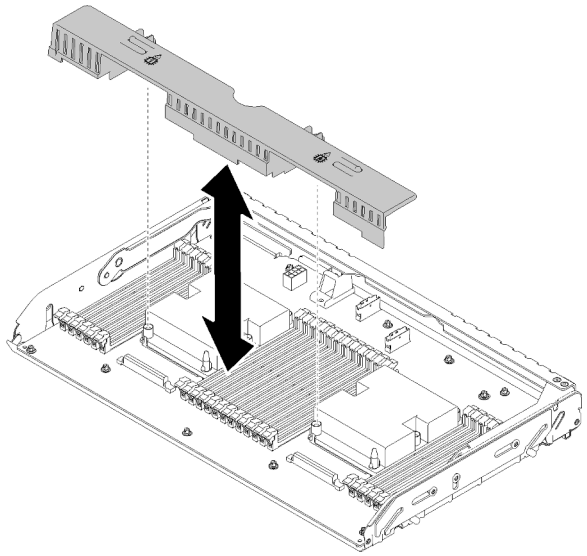

Figure 78. Air baffle removal from the processor and memory expansion tray

4. If you are installing memory modules on the system board, make sure to remove the expansion tray (see "Remove the processor and memory expansion tray" on page 120) and the air baffle that is installed on the system board.

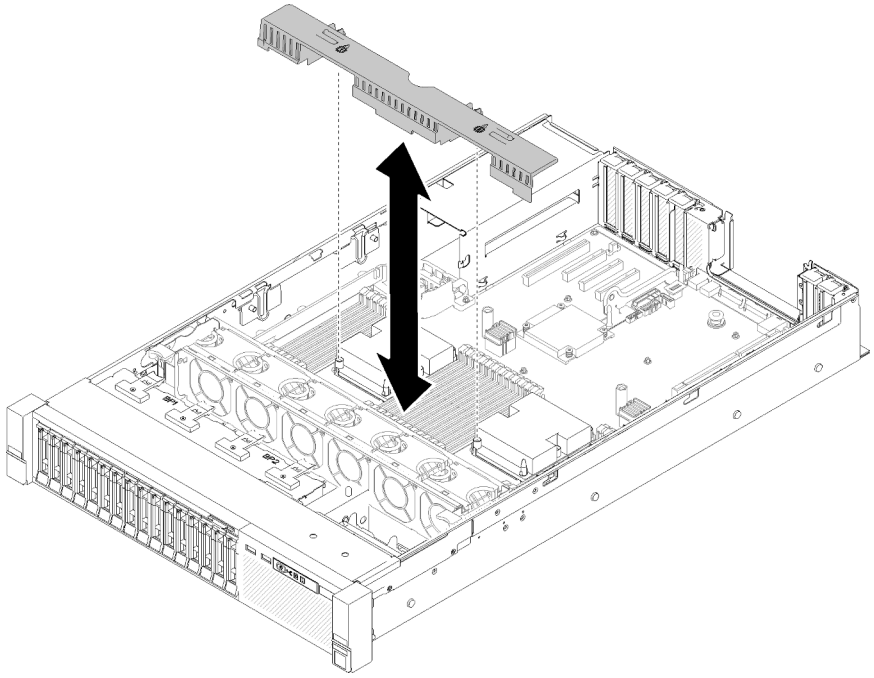

Figure 79. Air baffle removal from the system board

Complete the following steps to install a memory module:

Step 1. Open the memory module connector retaining clips. If a memory module is already installed in the connector, remove it.

Step 2. Align the keys on the memory module that you are installing with the connector; then, insert the memory module.

Step 3. Firmly press both ends of the memory module straight down into the connector until the retaining clips snap into the locked position.

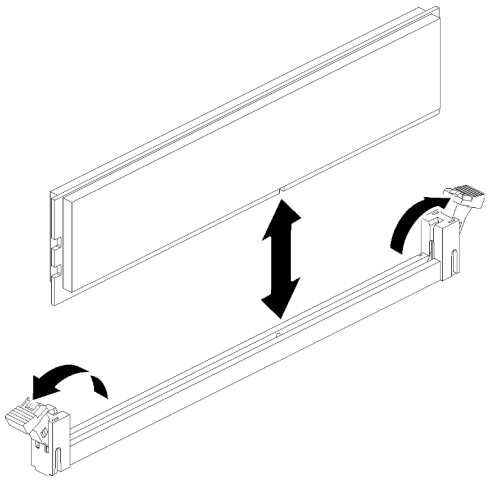

Figure 80. Memory module installation

Step 4. If you are installing additional memory modules, do so now.

After installing all the memory modules, complete the following steps:

1. Reinstall the system board air baffle (see "Install the system board air baffle and the power interposer" on page 128) or processor and memory expansion tray and expansion tray air baffle (see "Install the processor and memory expansion tray" on page 122).
2. Reinstall the top cover (see "Install the top cover" on page 146).
3. Reconnect the power cords and any cables that you removed.
4. Install the server in the rack.
5. Power on the server and any peripheral devices.
6. If you have installed a DCPMM:
   a. Make sure the DCPMM firmware is the latest version. If not, update it to the latest version (see https://sysmgt.lenovofiles.com/help/topic/com.lenovo.lxca.doc/update_fw.html).
   b. Configure DCPMMs and DRAM DIMMs after all the memory modules are installed (see "Configuring Intel Optane DC Persistent Memory (DCPMM)" in *Setup Guide*).
   c. Restore the data that has been backed up if necessary.

Demo video

Watch the procedure on YouTube

Operator panel tray assembly and front operator panel replacement

Use this procedure to remove or install the operator panel tray assembly and the front operator panel.

Remove the operator panel tray assembly

Use this procedure to remove the operator panel tray assembly.

Before removing the operator panel tray assembly:

1. Read the safety information and installation guidelines (see “Safety” on page iii and “Installation Guidelines” on page 55).
2. Turn off the server and peripheral devices and disconnect the power cords and all external cables (see “Power off the server” on page 11).
3. If the server is installed in a rack, slide the server out on its rack slide rails to gain access to the top cover, or remove the server from the rack.
4. Remove the top cover (see “Remove the top cover” on page 145).

To remove the operator panel tray assembly, complete the following steps:

Step 1. Remove the fan cage assembly (see “Remove the fan cage assembly” on page 65).

Step 2. Disconnect USB cables and front operator panel cable from the system board.

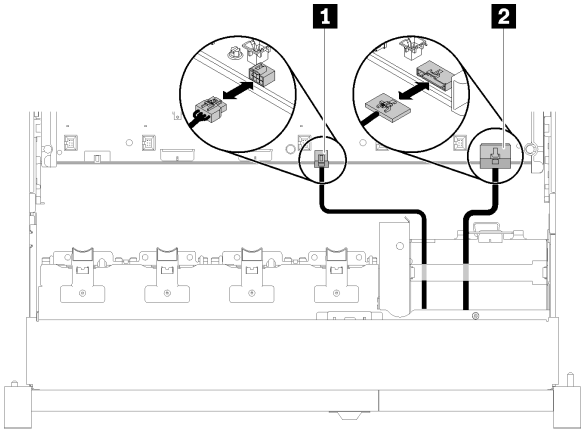

Figure 81. USB 2.0 cable and front operator panel cable

Table 42. USB 2.0 cable and front operator panel cable

1 USB 2.0 cable	2 Front operator panel cable

Note: Make sure the USB 3.0 connector stays vertical when being removed from the system board.

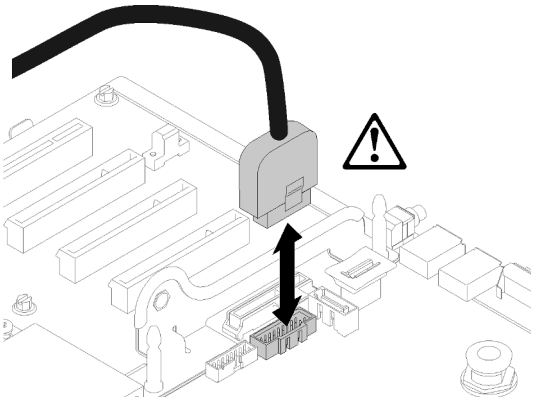

Figure 82. Removing USB 3.0 connector vertically

Step 3. Remove the USB 3.0 cable from the cable guide.

Step 4. Remove the screw that secures the tray assembly.

Step 5. Grasp the tab on the rear of the tray assembly, and push it out from the server.

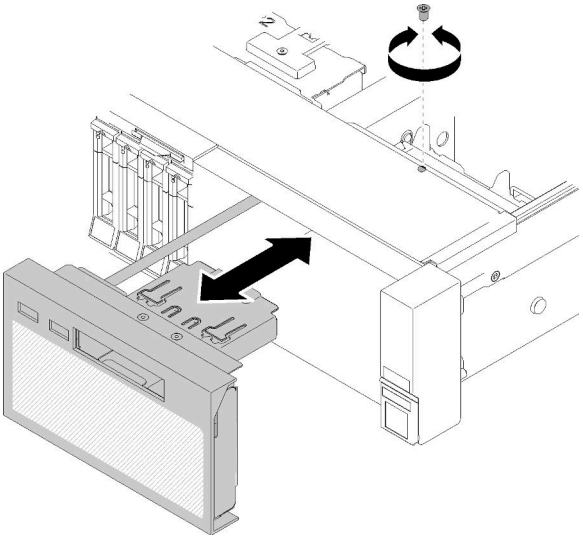

Figure 83. Operator panel tray assembly removal

If you are instructed to return the component or optional device, follow all packaging instructions, and use any packaging materials for shipping that are supplied to you.

Demo video

Watch the procedure on YouTube

Install the operator panel tray assembly

Use this procedure to install the operator panel tray assembly.

Before installing the operator panel tray assembly:

1. Read the safety information and installation guidelines (see “Safety” on page iii and “Installation Guidelines” on page 55).

To install the operator panel tray assembly, complete the following steps:

Step 1. Align the operator panel tray assembly with the slot in the front of the server, and insert the tray assembly until it clicks into place.

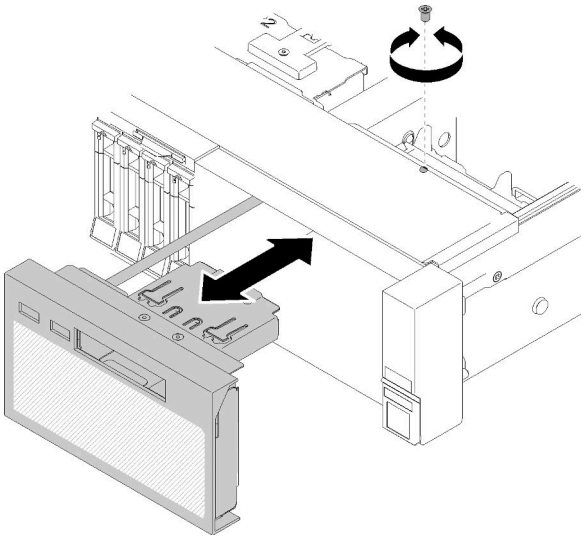

Figure 84. Operator panel tray assembly installation

Step 2. Install the tray assembly to the server with a screw.

Step 3. Connect the front operator panel cable and USB cables to the system board.

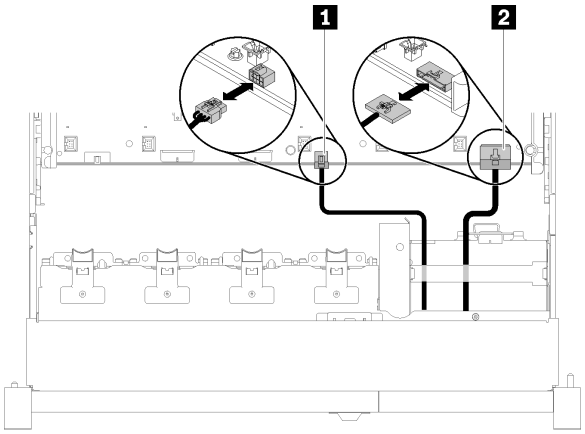

Figure 85. USB 2.0 cable and front operator panel cable

Table 43. USB 2.0 cable and front operator panel cable

1 USB 2.0 cable	2 Front operator panel cable

Note: Make sure the USB 3.0 connector stays vertical when being pushed into the connector on the system board.

Figure 86. Connecting USB 3.0 cable

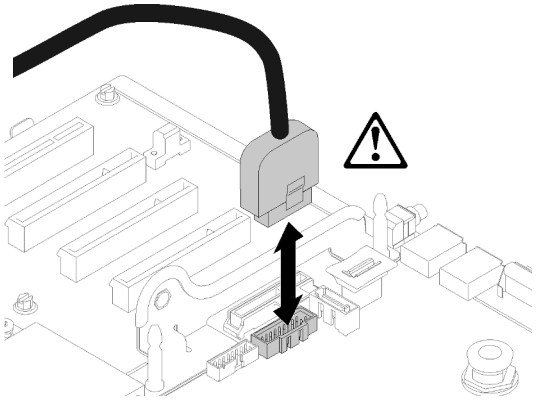

After installing the operator panel tray assembly, complete the following steps:

1. Reinstall the top cover (see “Install the top cover” on page 146).
2. Reconnect the power cords and any cables that you removed.
3. Install the server in the rack.
4. Power on the server and any peripheral devices.

Demo video

Watch the procedure on YouTube

Remove the front operator panel

Use this procedure to remove the front operator panel.

With the operator panel tray assembly removed from the system (see “Remove the operator panel tray assembly” on page 89) , complete the following steps to remove the front operator panel:

Step 1. Press on the two release tabs on the rear of the front operator panel, and carefully slide the assembly out of from the tray assembly.

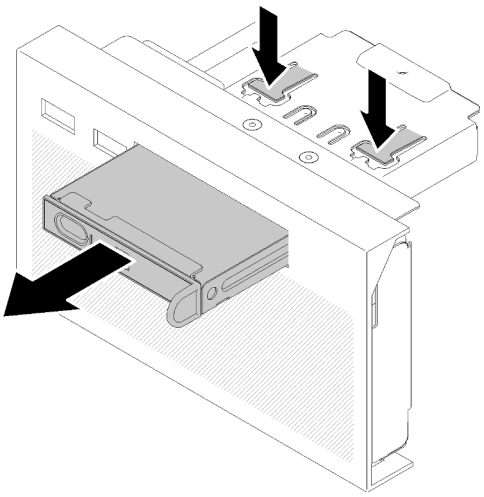

Figure 87. Front operator panel removal

If you are instructed to return the component or optional device, follow all packaging instructions, and use any packaging materials for shipping that are supplied to you.

Install the front operator panel

Use this procedure to install the front operator panel.

Before installing the front operator panel:

1. Read the safety information and installation guidelines (see “Safety” on page iii and “Installation Guidelines” on page 55).
2. Touch the static-protective package that contains the component to any unpainted metal surface on the server; then, remove it from the package and place it on a static-protective surface.

To install the front operator panel, complete the following steps:

Step 1. Align the panel with the slot on operator panel tray assembly, and slide it in until it clicks into place.

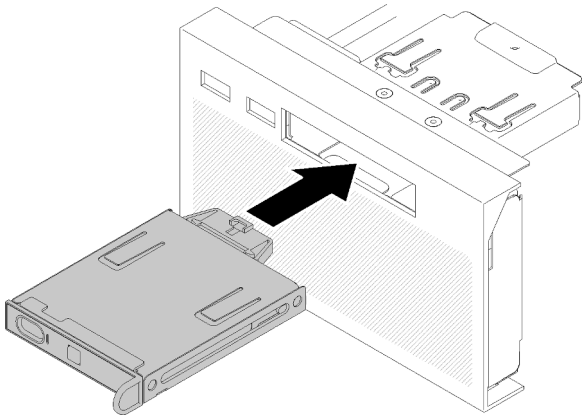

Figure 88. Front operator panel installation

After installing operator panel tray assembly, complete the following steps:

1. Reinstall the operator panel tray assembly (see “Install the operator panel tray assembly” on page 90).

PCIe riser-card assembly and adapter replacement

Use this procedure to remove or install the PCIe riser-card assembly and the adapters.

Remove the PCIe riser-card assembly

Use this procedure to remove the PCIe riser-card assembly.

Before removing the PCIe riser-card assembly:

1. Read the safety information and installation guidelines (see “Safety” on page iii and “Installation Guidelines” on page 55).
2. Turn off the server and peripheral devices and disconnect the power cords and all external cables (see “Power off the server” on page 11).
3. If the server is installed in a rack, slide the server out on its rack slide rails to gain access to the top cover, or remove the server from the rack.

4. Remove the top cover (see “Remove the top cover” on page 145).
5. Disconnect the USB 3.0 cable of operator panel tray assembly, and remove it vertically from the system board.

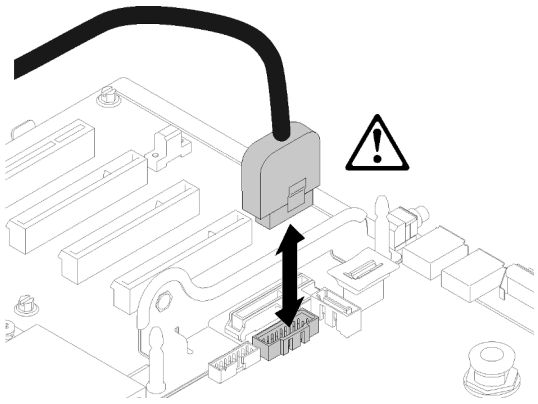

Figure 89. Removing USB 3.0 connector vertically

To remove the PCIe riser-card assembly, complete the following steps:

Step 1. Disconnect any cables connected to the adapter(s).

Step 2. Grasp the PCIe riser-card assembly at the touch-points, and lift it out from the system board.

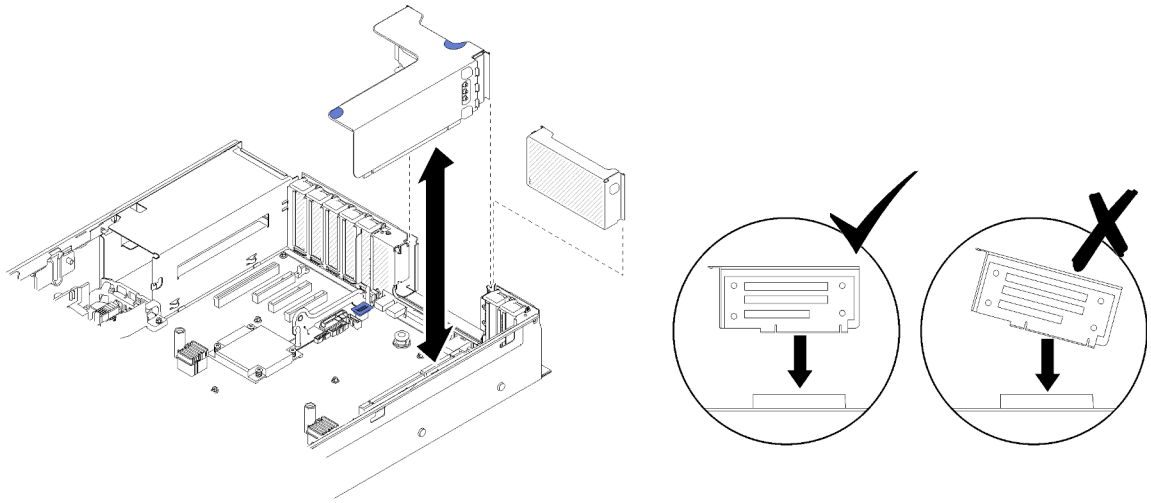

Figure 90. PCIe riser-card assembly removal

Step 3. Remove the screws that fix the PCIe riser-card, and slightly push it away to detach it from the riser-cage.

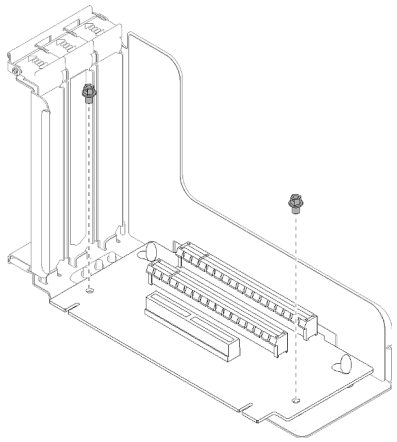

Figure 91. PCIe riser-card removal

After removing the PCIe riser-card assembly:

- If you are instructed to return the component or optional device, follow all packaging instructions, and use any packaging materials for shipping that are supplied to you.
- If you plan to recycle the riser-card assembly, complete the following steps to disassemble the riser-card assembly, and recycle the components with compliance to local regulations.

  1. Remove the two screws that fix the riser card.

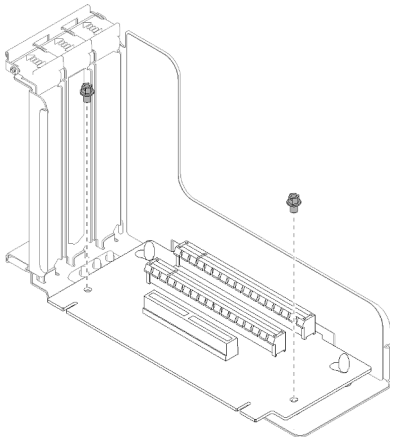

Figure 92. Disassembling the PCIe riser-card assembly

  2. Slightly slide and pivot the PCIe riser-card slightly to detach it from the riser bracket.

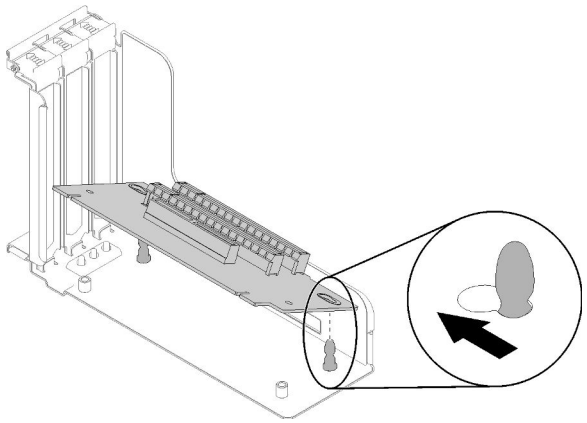

Figure 93. Disassembling the PCIe riser-card assembly

Demo video

Watch the procedure on YouTube

Install the PCIe riser-card assembly

Use this procedure to install the PCIe riser-card assembly.

Before installing the PCIe riser-card assembly:

1. Read the safety information and installation guidelines (see “Safety” on page iii and “Installation Guidelines” on page 55).
2. Touch the static-protective package that contains the component to any unpainted metal surface on the server; then, remove it from the package and place it on a static-protective surface.
3. Disconnect the USB 3.0 cable of operator panel tray assembly, and remove it vertically from the system board.

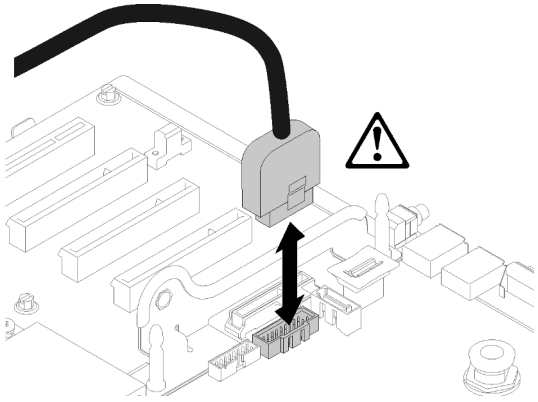

Figure 94. Removing USB 3.0 connector vertically

To install the PCIe riser-card assembly, complete the following steps:

Step 1. Assemble the PCIe riser-card assembly:

a. Align the bottom of the PCIe riser-card to the slot, and rotate the top to fit it into the slot on the riser-cage; then, move the PCIe riser-card slightly to fit the holes into the pins.

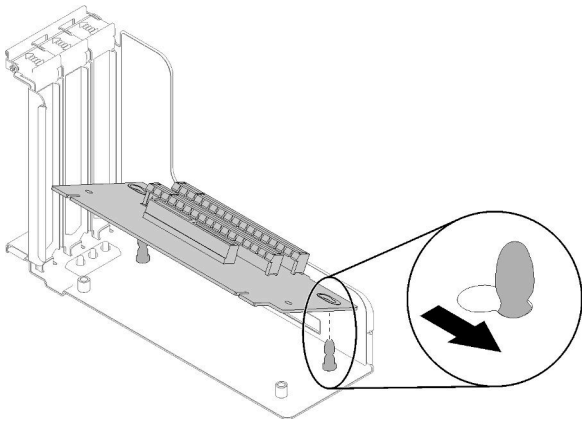

Figure 95. PCIe riser-card assembly

b. Install the PCIe riser-card to the riser-cage with screws.

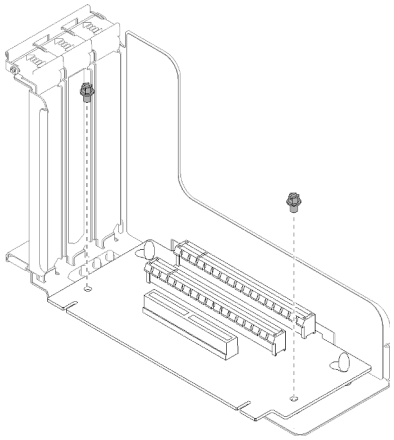

Figure 96. PCIe riser-card assembly

Step 2. Align the PCIe riser-card assembly with the connector on the system board; then, push it in until it clicks in place.

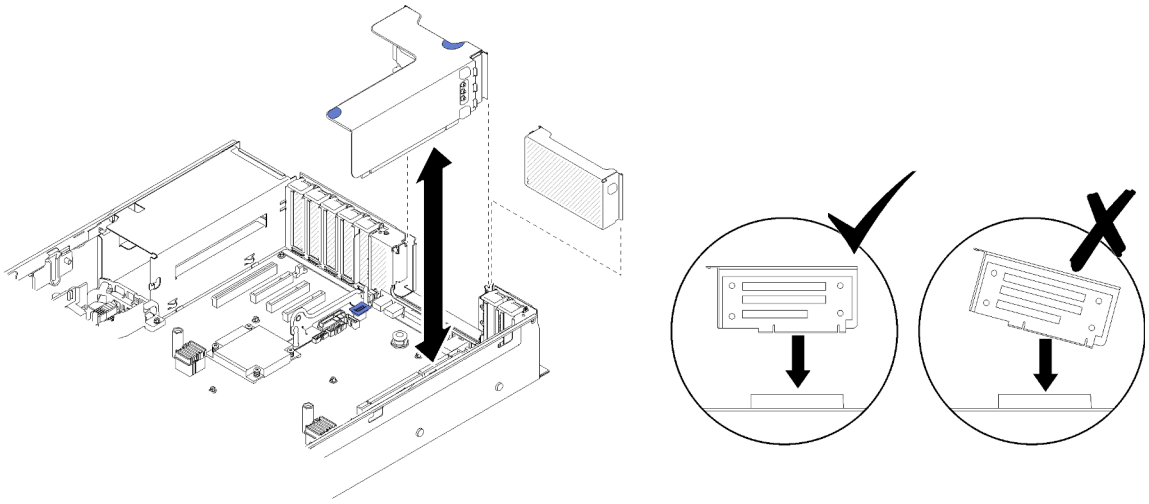

Figure 97. PCIe riser-card assembly installation

Step 3. Reconnect all the cables disconnected previously.

After installing the PCIe riser-card assembly, complete the following steps:

1. Reinstall the top cover (see “Install the top cover” on page 146).
2. Reconnect the power cords and any cables that you removed.
3. Install the server in the rack.
4. Power on the server and any peripheral devices.

Demo video

Watch the procedure on YouTube

Remove an adapter

Use this procedure to remove an adapter.

Follow the following instructions accordingly to the location where the adapter has been installed.

Remove an adapter from the system board

Before removing an adapter from the system board:

1. Read the safety information and installation guidelines (see “Safety” on page iii and “Installation Guidelines” on page 55).
2. Turn off the server and peripheral devices and disconnect the power cords and all external cables (see “Power off the server” on page 11).
3. If the server is installed in a rack, slide the server out on its rack slide rails to gain access to the top cover, or remove the server from the rack.
4. Remove the top cover (see “Remove the top cover” on page 145).

To remove an adapter from the system board, complete the following steps:

Step 1. Disconnect any cables (including external ones) from the adapter.

Step 2. Open the retention latch.

Step 3. Grasp the adapter by upper corners, and pull it from the system board.

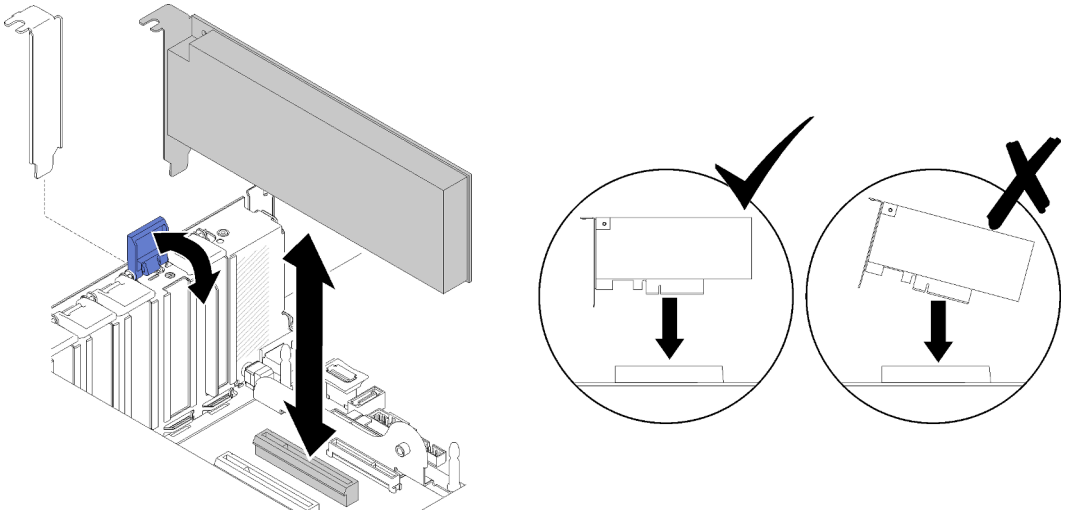

Figure 98. Adapter removal from the system board

Remove an adapter from the PCIe riser-card assembly

To remove an adapter from a PCIe riser-card assembly removed from the server, complete the following steps:

Step 1. Open the bracket on the PCIe riser-card assembly.

Step 2. Grasp the adapter by upper corners, and pull it from thePCIe riser-card assembly.

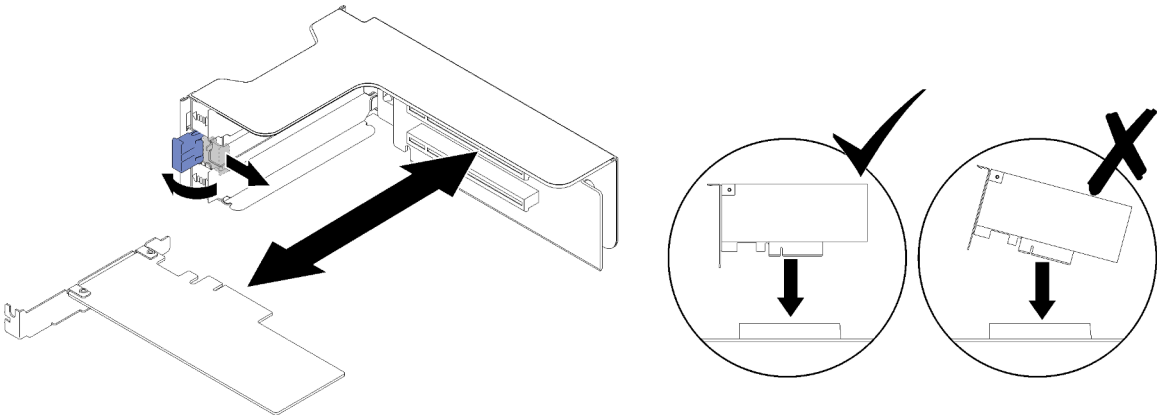

Figure 99. Adapter removal from the PCIe riser-card assembly

If you are instructed to return the component or optional device, follow all packaging instructions, and use any packaging materials for shipping that are supplied to you.

Demo video

Watch the procedure on YouTube

Install an adapter

Use this procedure to install an adapter.

Before installing an adapter:

1. Read the safety information and installation guidelines (see “Safety” on page iii and “Installation Guidelines” on page 55).
2. Touch the static-protective package that contains the component to any unpainted metal surface on the server; then, remove it from the package and place it on a static-protective surface.

Follow the following instructions accordingly to the location where the adapter is to be installed.

Install an adapter on the system board

To install an adapter on the system board, complete the following steps:

Step 1. Open the retention latch.

Step 2. Align the adapter with the connector on the system board.

Notes: Use specific PCIe slots for the following RAID adapters:

- RAID adapter for SATA/SAS drives: slot 2, 10
- PCIe switch card: slot 1, 11

For PCIe slot numbering, see “System-board connectors” on page 25.

Step 3. Push the adapter in until it clicks into place.

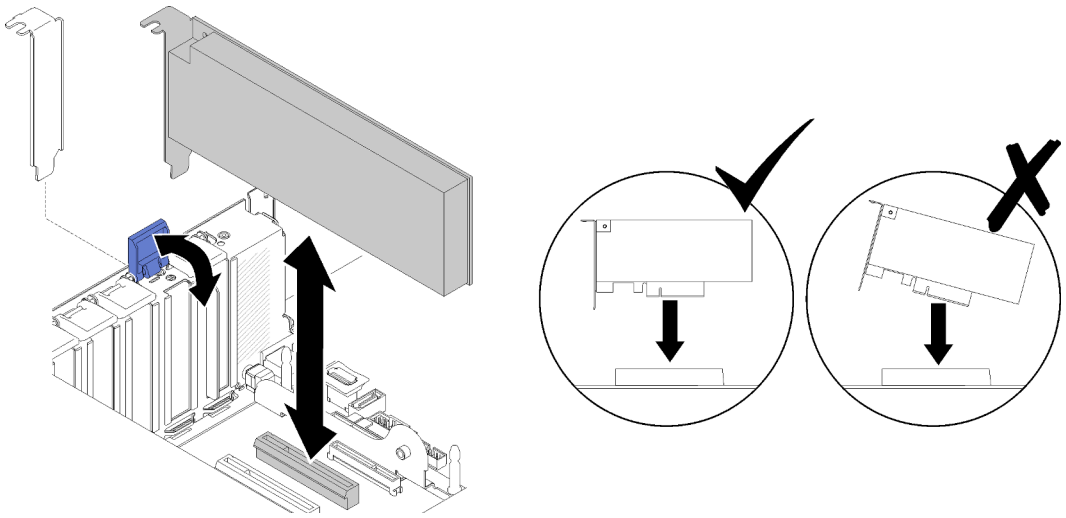

Figure 100. Adapter installation to the system board

Step 4. Connect internal cables to the adapter. Follow instructions of internal cable routing for adapters (see “Internal cable routing” on page 34).

Step 5. Close the retention latch.

Install an adapter in a PCIe riser-card assembly

To install an adapter to a PCIe riser-card assembly removed from the server, complete the following steps:

Note: When both LOM adapter and ML2 adapter are installed to the server, the system can support up to two additional network adapters.

Step 1. Open the bracket on the PCIe riser-card assembly.

Step 2. Align the adapter with the connector on the PCIe riser-card assembly.

Step 3. Push the adapter into the PCIe riser-card assembly until it clicks into place.

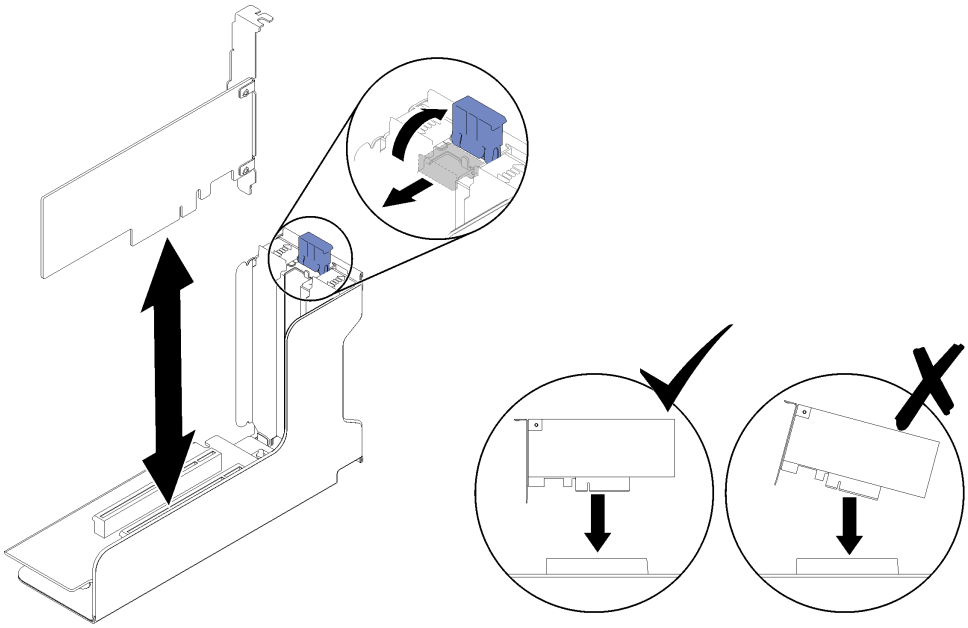

Figure 101. Adapter installation to the PCIe riser-card assembly

Step 4. Close the bracket.

After installing an adapter in a PCIe riser-card assembly, complete the following steps:

1. If the adapter is installed to a PCIe riser-card assembly, install the PCIe riser-card assembly to the server (see "Install the PCIe riser-card assembly" on page 96).
2. Reinstall the top cover (see "Install the top cover" on page 146).
3. Reconnect the power cords and any cables that you removed.
4. Install the server in the rack.
5. Power on the server and any peripheral devices.

Demo video

Watch the procedure on YouTube

Power supply unit replacement

Use this procedure to install or remove power supply units.

Remove a hot-swap power supply unit

Use this procedure to remove a hot-swap power supply unit.

S001

DANGER

Electrical current from power, telephone, and communication cables is hazardous.
To avoid a shock hazard:

- **Connect all power cords to a properly wired and grounded electrical outlet/source.**
- **Connect any equipment that will be attached to this product to properly wired outlets/sources.**
- **When possible, use one hand only to connect or disconnect signal cables.**
- **Never turn on any equipment when there is evidence of fire, water, or structural damage.**
- **The device might have more than one power cord, to remove all electrical current from the device, ensure that all power cords are disconnected from the power source.**

S002

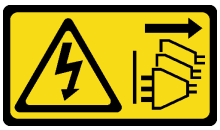

CAUTION:
The power-control button on the device and the power switch on the power supply do not turn off the electrical current supplied to the device. The device also might have more than one power cord. To remove all electrical current from the device, ensure that all power cords are disconnected from the power source.

S029

DANGER

For -48V dc power supply, electrical current from power cords is hazardous.
To avoid a shock hazard:

- **To connect or disconnect -48V dc power cords when you need to remove/install redundancy power supply unit(s).**

To Connect:	To Disconnect:
1. Turn OFF subject dc power source(s) and equipment (s) that are attached to this product. 2. Install the power supply unit(s) into the system housing. 3. Attach dc power cord(s) to the product. • Ensure correct polarity of -48 V dc connections: RTN is + and -Vin (typical -48 V) dc is -. Earth ground should be connected very well. 4. Connect dc power cord(s) to subject power source (s). 5. Turn ON all the power source(s).	1. Disconnect or turn off the subject dc power source(s) (at the breaker panel) before removing the power supply unit(s). 2. Remove the subject dc cord(s) and make sure the wire terminal of power cord(s) is insulated. 3. Unplug the subject power supply unit(s) from the system housing.

S035

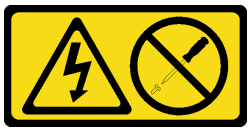

CAUTION:
Never remove the cover on a power supply or any part that has this label attached. Hazardous voltage, current, and energy levels are present inside any component that has this label attached. There are no serviceable parts inside these components. If you suspect a problem with one of these parts, contact a service technician.

Before removing a hot-swap power supply unit:

1. Read the safety information and installation guidelines (see “Safety” on page iii and “Installation Guidelines” on page 55).
2. If the server is in a rack, adjust the cable management arm (CMA) to gain access to the power supply bay.

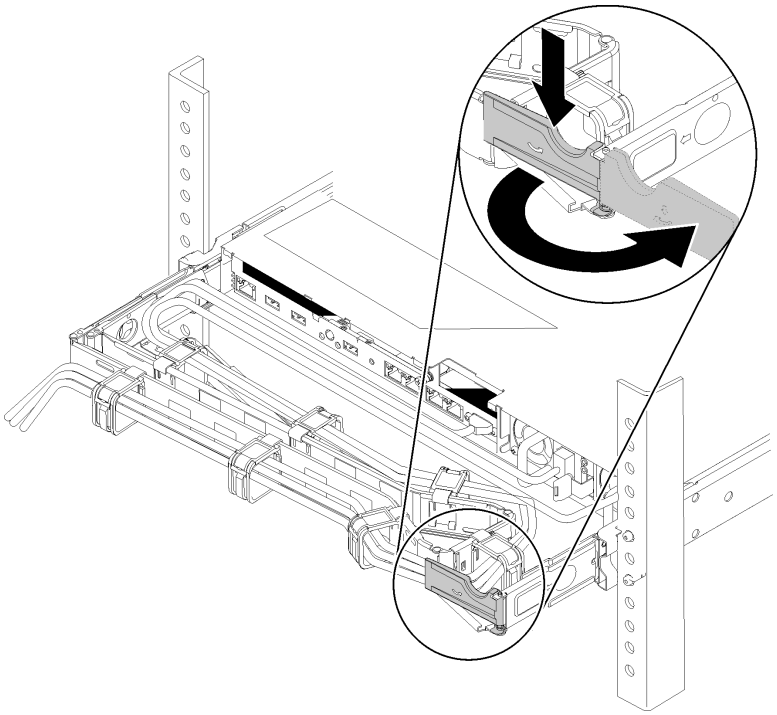

Figure 102. CMA adjustment

If you have installed the 2U CMA Upgrade Kit for Toolless Slide Rail or Toolless Slide Rail Kit with 2U CMA, do the following:

a. Press down the stop bracket and rotate it to the open position.
b. Rotate the CMA out of the way to gain access to the power supply bay.

To remove a hot-swap power supply unit, complete the following steps:

Step 1. Press and hold on the orange release tab.

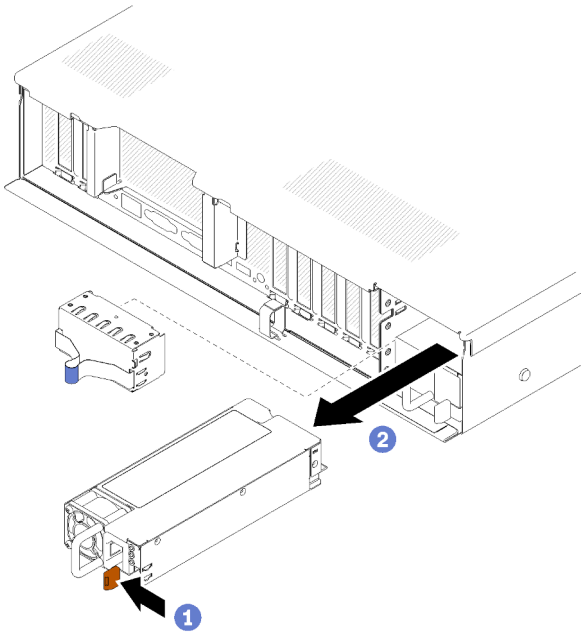

Figure 103. Power supply unit removal

Step 2. Grasp the handle, pull the power supply out of the server and set it aside.

Note: Fill the power supply bay with a filler if you are not replacing a new power supply immediately.

If you are instructed to return the component or optional device, follow all packaging instructions, and use any packaging materials for shipping that are supplied to you.

Demo video

Watch the procedure on YouTube

Install a hot-swap power supply unit

Use this procedure to install a hot-swap power supply unit.

S001

DANGER

Electrical current from power, telephone, and communication cables is hazardous.
To avoid a shock hazard:

- **Connect all power cords to a properly wired and grounded electrical outlet/source.**
- **Connect any equipment that will be attached to this product to properly wired outlets/sources.**
- **When possible, use one hand only to connect or disconnect signal cables.**
- **Never turn on any equipment when there is evidence of fire, water, or structural damage.**
- **The device might have more than one power cord, to remove all electrical current from the device, ensure that all power cords are disconnected from the power source.**

S002

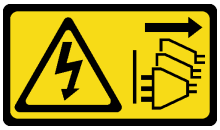

CAUTION:
The power-control button on the device and the power switch on the power supply do not turn off the electrical current supplied to the device. The device also might have more than one power cord. To remove all electrical current from the device, ensure that all power cords are disconnected from the power source.

S029

DANGER

For -48V dc power supply, electrical current from power cords is hazardous.
To avoid a shock hazard:

- **To connect or disconnect -48V dc power cords when you need to remove/install redundancy power supply unit(s).**

To Connect:	To Disconnect:
1. Turn OFF subject dc power source(s) and equipment (s) that are attached to this product. 2. Install the power supply unit(s) into the system housing. 3. Attach dc power cord(s) to the product. • Ensure correct polarity of -48 V dc connections: RTN is + and -Vin (typical -48 V) dc is -. Earth ground should be connected very well. 4. Connect dc power cord(s) to subject power source (s). 5. Turn ON all the power source(s).	1. Disconnect or turn off the subject dc power source(s) (at the breaker panel) before removing the power supply unit(s). 2. Remove the subject dc cord(s) and make sure the wire terminal of power cord(s) is insulated. 3. Unplug the subject power supply unit(s) from the system housing.

S035

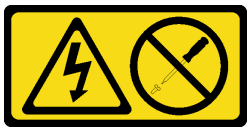

CAUTION:
Never remove the cover on a power supply or any part that has this label attached. Hazardous voltage, current, and energy levels are present inside any component that has this label attached. There are no serviceable parts inside these components. If you suspect a problem with one of these parts, contact a service technician.

Following are the types of power supply units compatible to this server and notices to take during installation. These power supplies are designed for parallel operation. In the event of a power-supply failure, the redundant power supply continues to power the system. The server supports a maximum of two power supplies with N+1 redundancy support.

- 750-watt platinum power supply
  - Input power 115V or 220V ac
- 1100-watt platinum power supply
  - Input power 115V or 220V ac
- 1600-watt platinum power supply
  - Input power 115V or 220V ac

Before installing a hot-swap power supply:

1. Read the safety information and installation guidelines (see “Safety” on page iii and “Installation Guidelines” on page 55).
2. Touch the static-protective package that contains the component to any unpainted metal surface on the server; then, remove it from the package and place it on a static-protective surface.
3. If the server is in a rack, adjust the cable management arm (CMA) to gain access to the power supply bay.

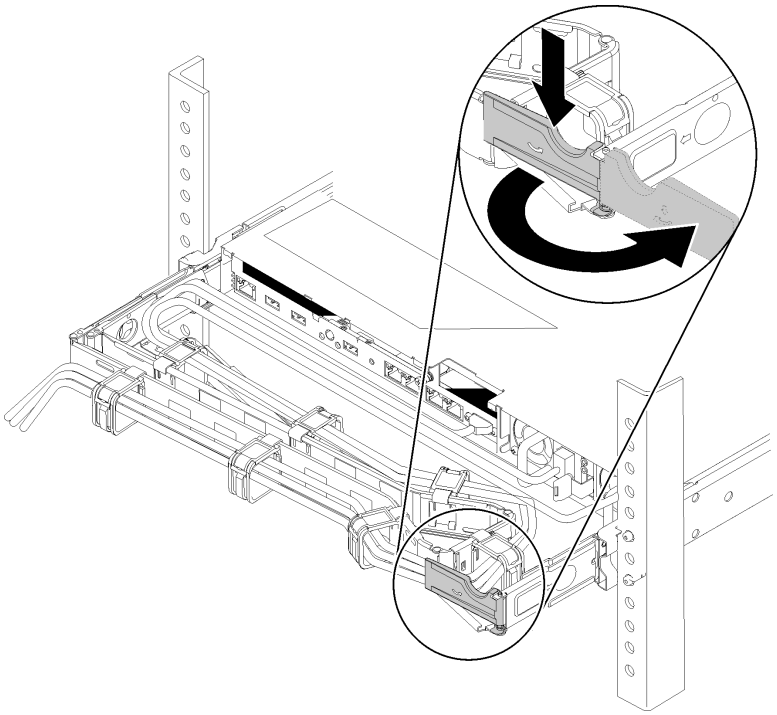

Figure 104. CMA adjustment

If you have installed the 2U CMA Upgrade Kit for Toolless Slide Rail or Toolless Slide Rail Kit with 2U CMA, do the following:

a. Press down the stop bracket and rotate it to the open position.

b. Rotate the CMA out of the way to gain access to the power supply bay.

4. If the power supply unit to be installed comes with different wattage than the one that is already installed, turn off the server and peripheral devices, and disconnect the power cords and all external cables; then, remove the installed power supply unit (see "Remove a hot-swap power supply unit" on page 101).

   Important: Do not mix power supplies with different wattages in the same server.

To install a power supply unit, complete the following steps:

Step 1. If you are installing the power supply into an empty bay, remove the power-supply filler panel from the power-supply bay.

Step 2. Grasp the handle on the rear of the power supply, and slide it into the power-supply bay until it clicks into place.

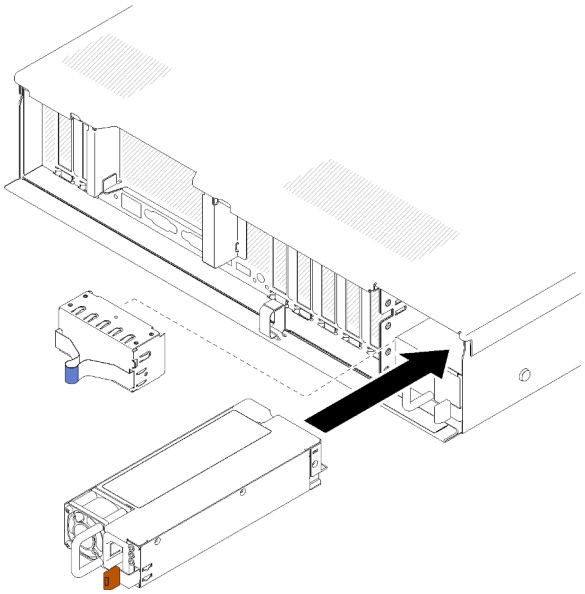

Figure 105. Power supply unit installation

Notes:

- Pull the handle to try if the power supply unit is properly installed. If it slides out, reinstall it.
- Power supply 1 is on the bottom, while power supply 2 is on the top. For more details, see “Rear view” on page 21.

Step 3. Connect the power cord to the power supply unit, and make sure it's properly connected to the power.

Demo video

Watch the procedure on YouTube

Processor and heat sink replacement

Use the following procedures to replace an assembled processor and heat sink, known as a processor-heat-sink module (PHM), a processor, or a heat sink.

Attention: Before reusing a processor or heat sink, make sure you use Lenovo proven alcohol cleaning pad and thermal grease.

Important: The processor in your server can throttle in response to thermal conditions, temporarily lowering its speed to reduce heat output. In instances where a few processor cores are throttled for an extremely short time period (100 ms or less), the only indication will be an entry in the operating system event log with no corresponding entry in the system XCC event log. If this situation occurs, the event can be ignored and processor replacement is not required.

Remove a processor and heat sink

Processors are on the system board and are to be accessed from the top of the server with top cover removed. This task has instructions for removing an assembled processor and heat sink, known as a processor-heat-sink module (PHM), a processor, and a heat sink. All of these tasks require a Torx T30 driver.

"**Read** the installation Guidelines" on page 55

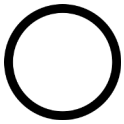

"**Power off** the server for this task" on page 11

"**ATTENTION: Static Sensitive Device** Ground package before opening" on page 57

Attention:

- Each processor socket must always contain a cover or a PHM. When removing or installing a PHM, protect empty processor sockets with a cover.
- Do not touch the processor socket or processor contacts. Processor-socket contacts are very fragile and easily damaged. Contaminants on the processor contacts, such as oil from your skin, can cause connection failures.
- Remove and install only one PHM at a time. If the system board supports multiple processors, install the PHMs starting with the first processor socket.
- Do not allow the thermal grease on the processor or heat sink to come in contact with anything. Contact with any surface can compromise the thermal grease, rendering it ineffective. Thermal grease can damage components, such as electrical connectors in the processor socket. Do not remove the grease cover from a heat sink until you are instructed to do so.
- Thermal grease can stay functional on the heat sink for two years. When installing a new heat sink, make sure to check the manufacturing date to ensure the thermal grease is still functioning. If the date is over two years ago, replace the thermal grease to avoid seating issues.

Before you remove a PHM:

Note: The heat sink, processor, and processor retainer for your system might be different than those shown in the illustrations.

1. Read the safety information and installation guidelines (see "Safety" on page iii and "Installation Guidelines" on page 55).
2. Turn off the server and peripheral devices and disconnect the power cords and all external cables (see "Power off the server" on page 11).
3. Remove the top cover (see "Remove the top cover" on page 145).

4. Remove the system board air baffle (see “Remove the system board air baffle and the power interposer” on page 126) or the processor and memory expansion tray and the expansion tray air baffle (see “Remove the processor and memory expansion tray” on page 120).

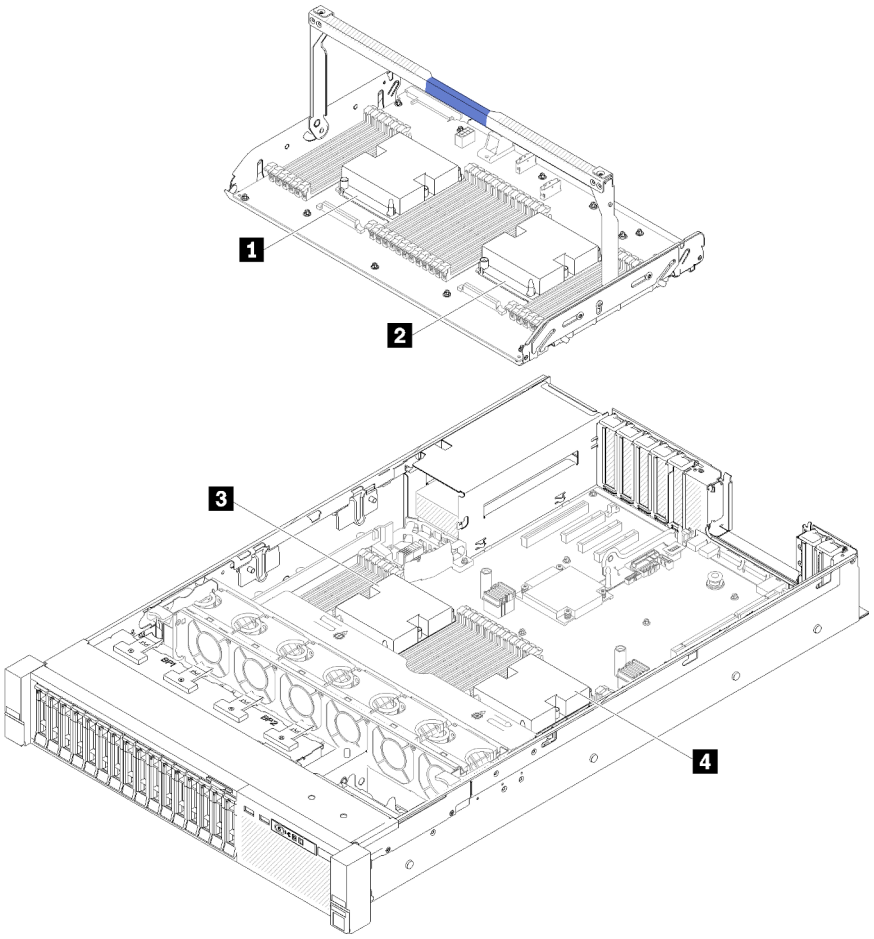

Figure 106. Processor locations

Table 44. Processor locations

1 Processor 3	2 Processor 4
3 Processor 1	4 Processor 2

Complete the following steps to remove a PHM.

Step 1. Remove the PHM from the system board.

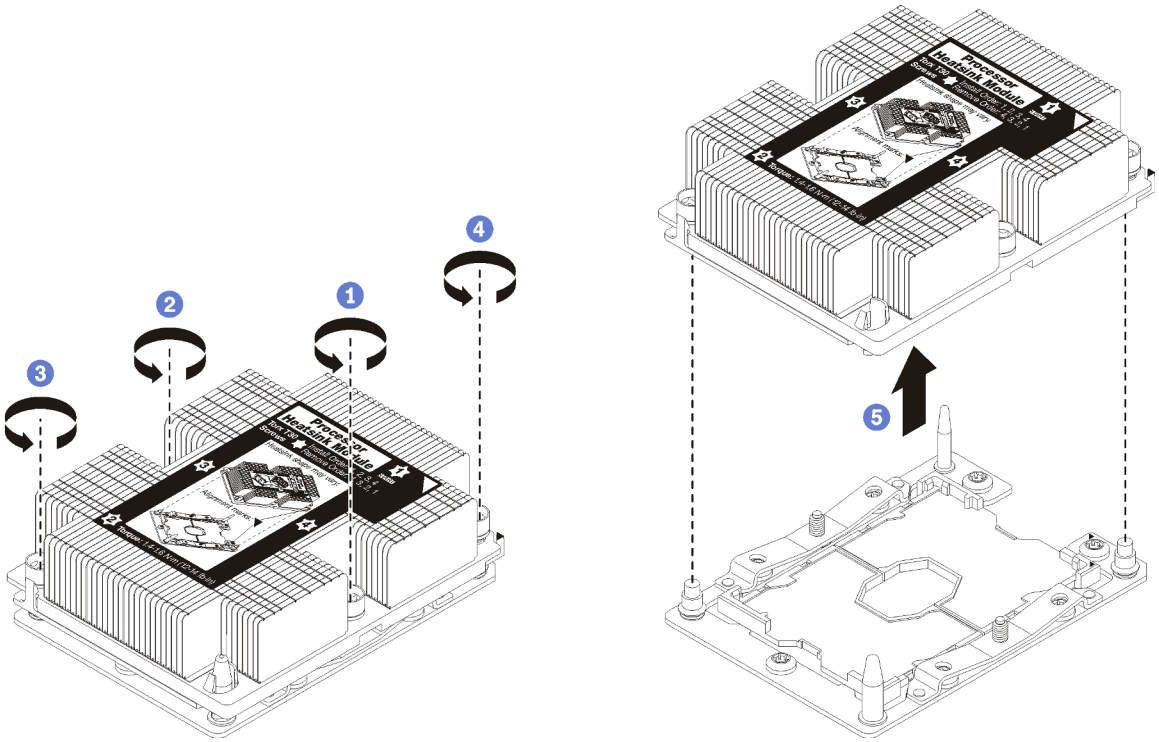

Figure 107. Removing a PHM

Attention: To prevent damage to components, make sure that you follow the indicated loosening sequence.

a. Fully loosen the Torx T30 captive fasteners on the processor-heat-sink module *in the removal sequence shown* on the heat-sink label.

b. Lift the processor-heat-sink module from the processor socket.

After you remove a PHM:

- If you are removing the PHM as part of a system board replacement, set the PHM aside.
- If you are replacing the processor or heat sink, separate the processor and its retainer from the heat sink.

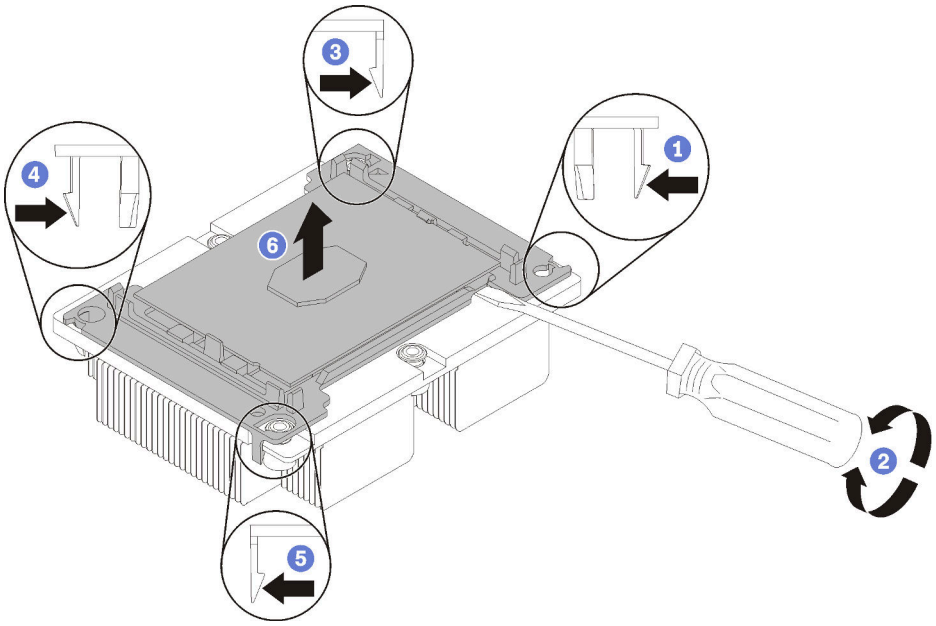

Figure 108. Separating a heat sink from a processor

1. Press the retaining clip at the corner of the processor retainer closest to the pry point; then, gently pry this corner of the retainer away from the heat sink with a flat-bladed screwdriver, using a twisting motion to break the processor-to-heat-sink seal.
2. Release the remaining retaining clips and lift the processor and retainer from the heat sink.
3. After separating the processor and retainer from the heat sink, hold the processor and retainer with the thermal-grease side down and the processor-contact side up to prevent the processor from falling out of the retainer.

   Note: The processor retainer will be removed and discarded in a later step and replaced with a new one.

- If you are replacing the processor, you will be reusing the heat sink. Wipe the thermal grease from the bottom of the heat sink using an alcohol cleaning pad.
- If you are replacing the heat sink, you will be reusing the processor. Wipe the thermal grease from the top of the processor using an alcohol cleaning pad.

If you are instructed to return the component or optional device, follow all packaging instructions, and use any packaging materials for shipping that are supplied to you.

Demo video

Watch the procedure on YouTube

Install a processor and heat sink

This task has instructions for installing an assembled processor and heat sink, known as a processor-heat-sink module (PHM), a processor, and a heat sink. All of these tasks require a Torx T30 driver.

"**Read** the installation Guidelines" on page 55

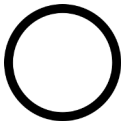

"**Power off** the server for this task" on page 11

"**ATTENTION: Static Sensitive Device** Ground package before opening" on page 57

Attention:

- Each processor socket must always contain a cover or a PHM. When removing or installing a PHM, protect empty processor sockets with a cover.
- Do not touch the processor socket or processor contacts. Processor-socket contacts are very fragile and easily damaged. Contaminants on the processor contacts, such as oil from your skin, can cause connection failures.
- Remove and install only one PHM at a time. If the system board supports multiple processors, install the PHMs starting with the first processor socket.
- Do not allow the thermal grease on the processor or heat sink to come in contact with anything. Contact with any surface can compromise the thermal grease, rendering it ineffective. Thermal grease can damage components, such as electrical connectors in the processor socket. Do not remove the grease cover from a heat sink until you are instructed to do so.
- Thermal grease can stay functional on the heat sink for two years. When installing a new heat sink, make sure to check the manufacturing date to ensure the thermal grease is still functioning. If the date is over two years ago, replace the thermal grease to avoid seating issues.

Notes:

- PHMs are keyed for the socket where they can be installed and for their orientation in the socket.
- See https://serverproven.lenovo.com/ for a list of processors supported for your server. All processors on the system board must have the same speed, number of cores, and frequency.
- Before you install a new PHM or replacement processor, update your system firmware to the latest level. See "Update the firmware" in the *ThinkSystem SR850 Setup Guide*.
- Installing an additional PHM can change the memory requirements for your system. See *ThinkSystem SR850 Memory Population Reference* for a list of processor-to-memory relationships.
- Optional devices available for your system might have specific processor requirements. See the documentation that comes with the optional device for information.

Before you install a PHM:

Note: The heat sink, processor, and processor retainer for your system might be different than those shown in the illustrations.

1. Remove the existing PHM, if one is installed. See "Remove a processor and heat sink" on page 110.

   Note: Replacement processors come with both rectangular and square processor retainers. A rectangular retainer comes attached to the processor. The square retainer can be discarded.

2. If you are replacing a heat sink, replace the processor retainer. *Processor retainers should not be reused.*

   a. Remove the old processor retainer.

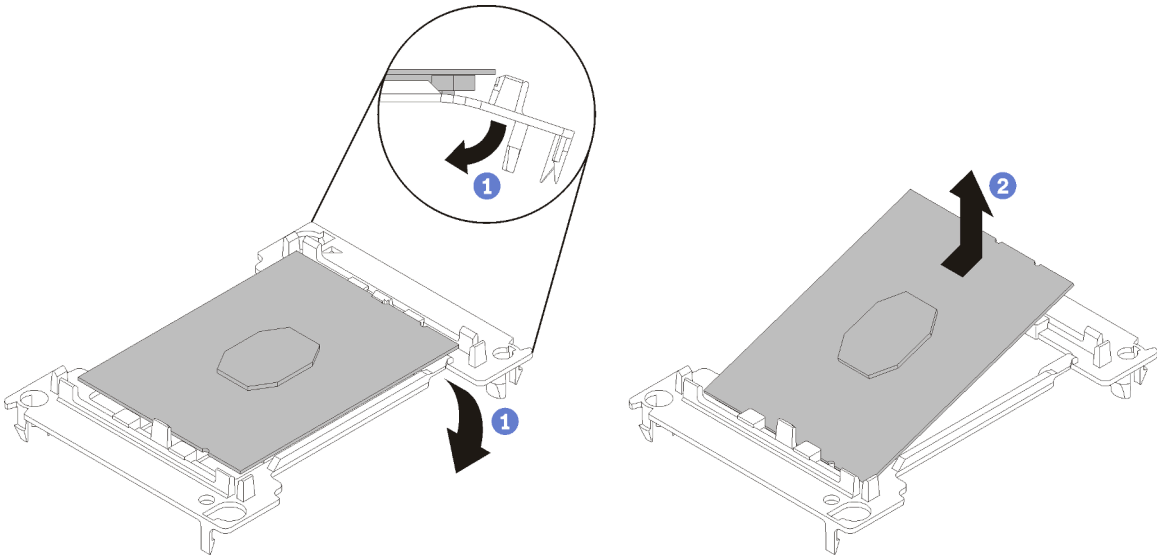

Figure 109. Removing a processor retainer

Note: When the processor is out of its retainer, hold the processor by the long edges to prevent touching the contacts or the thermal grease, if it is applied.

With the processor-contact side up, flex the ends of the retainer down and away from the processor to release the retaining clips; then, remove the processor from the retainer. Discard the old retainer.

b. Install a new processor retainer.

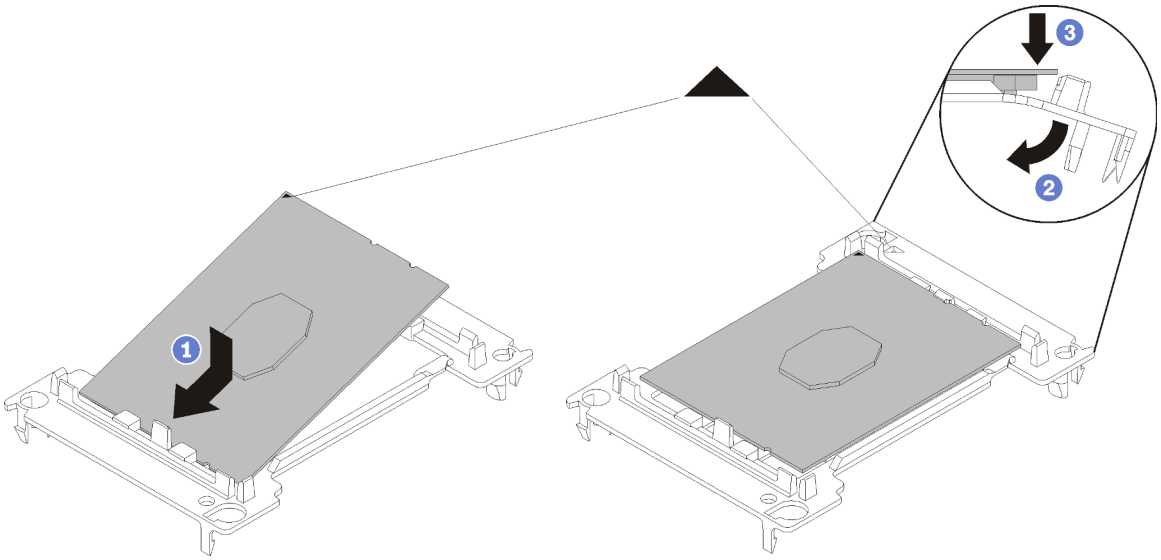

Figure 110. Installing a processor retainer

1) Position the processor on the new retainer so that the triangular marks align; then, insert the unmarked end of the processor into the retainer.
2) Holding the inserted end of the processor in place, flex the opposite end of the retainer down and away from the processor until you can press the processor under the clip on the retainer.

   To prevent the processor from falling out of the retainer after it is inserted, keep the processor-contact side up and hold the processor-retainer assembly by the sides of the retainer.

3) If there is any old thermal grease on the processor, gently clean the top of the processor using an alcohol cleaning pad.

   Note: If you are applying new thermal grease on the top of the processor, make sure to do it after the alcohol has fully evaporated.

3. If you are replacing a processor:
   a. If the processor to be installed was removed from another system board, wipe the thermal grease from the processor with an alcohol cleaning pad, and dispose of the cleaning pad after all of the thermal grease is removed.

      Note: If you are applying new thermal grease on the top of the processor, make sure to do it after the alcohol has fully evaporated.

   b. Remove the processor identification label from the heat sink and replace it with the new label that comes with the replacement processor.
   c. Apply the thermal grease on the top of the processor with syringe by forming four uniformly spaced dots, while each dot consists of about 0.1 ml of thermal grease.

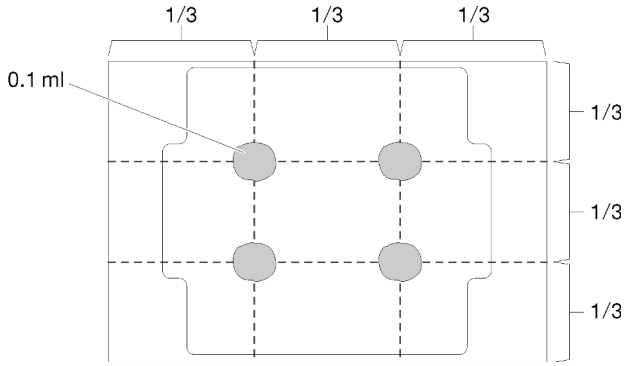

Figure 111. Proper shape of the thermal grease

4. If you are replacing a heat sink, remove the processor identification label from the old heat sink and place it on the new heat sink in the same location. The label is on the side of the heat sink closest to the triangular alignment mark.

   If you are unable to remove the label and place it on the new heat sink, or if the label is damaged during transfer, write the processor serial number from the processor identification label on the new heat sink in the same location as the label would be placed using a permanent marker.

5. Assemble the processor and heat sink, if these components are separate.

   Notes:

   - If you are replacing a processor, install the heat sink onto the processor and retainer while the processor and retainer are in the shipping tray.
   - If you are replacing a heat sink, remove the heat sink from its shipping tray and place the processor and retainer in the opposite half of the heat sink shipping tray with the processor-contact side down. To prevent the processor from falling out of the retainer, hold the processor-retainer assembly by its sides with the processor-contact side up until you turn it over to fit in the shipping tray.

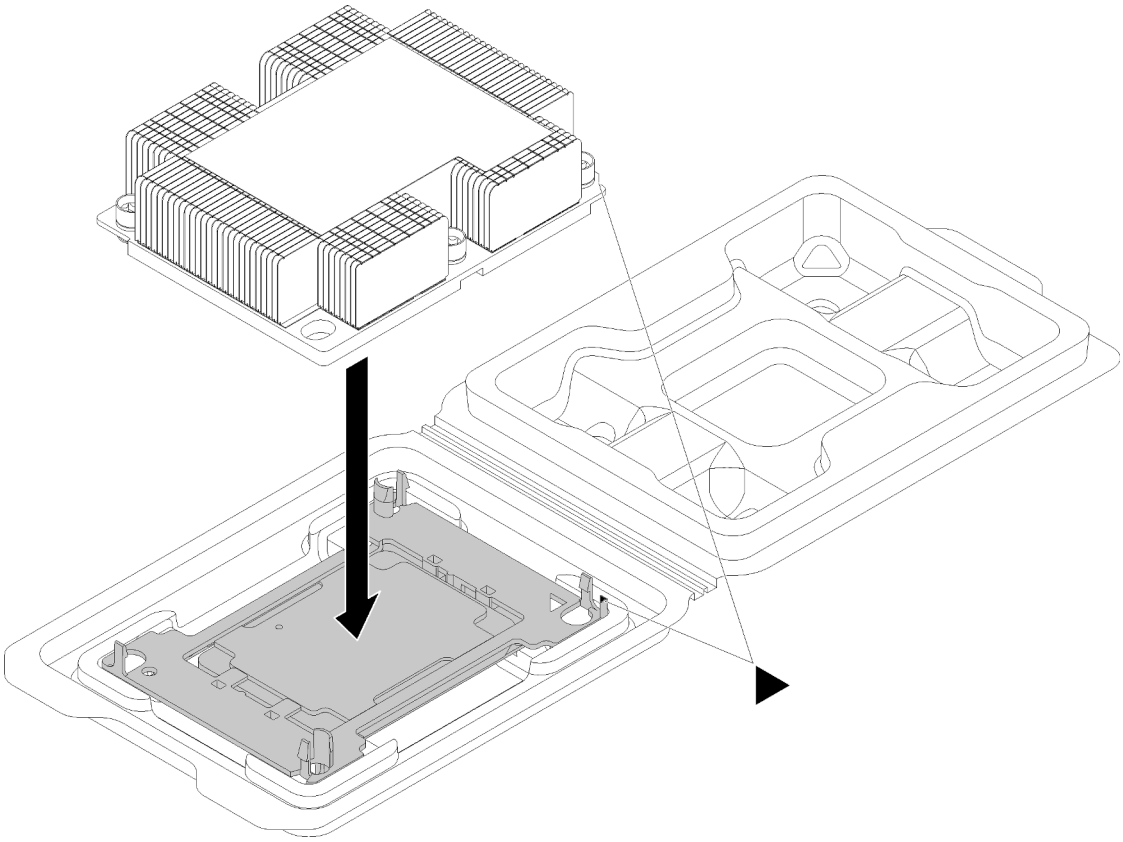

Figure 112. Assembling a PHM in the shipping tray

a. Align the triangular marks on the processor retainer and the heat sink or align the triangular mark on the processor retainer with the notched corner of the heat sink.
b. Insert the processor-retainer clips into the holes on the heat sink.
c. Press the retainer into place until the clips at all four corners engage.

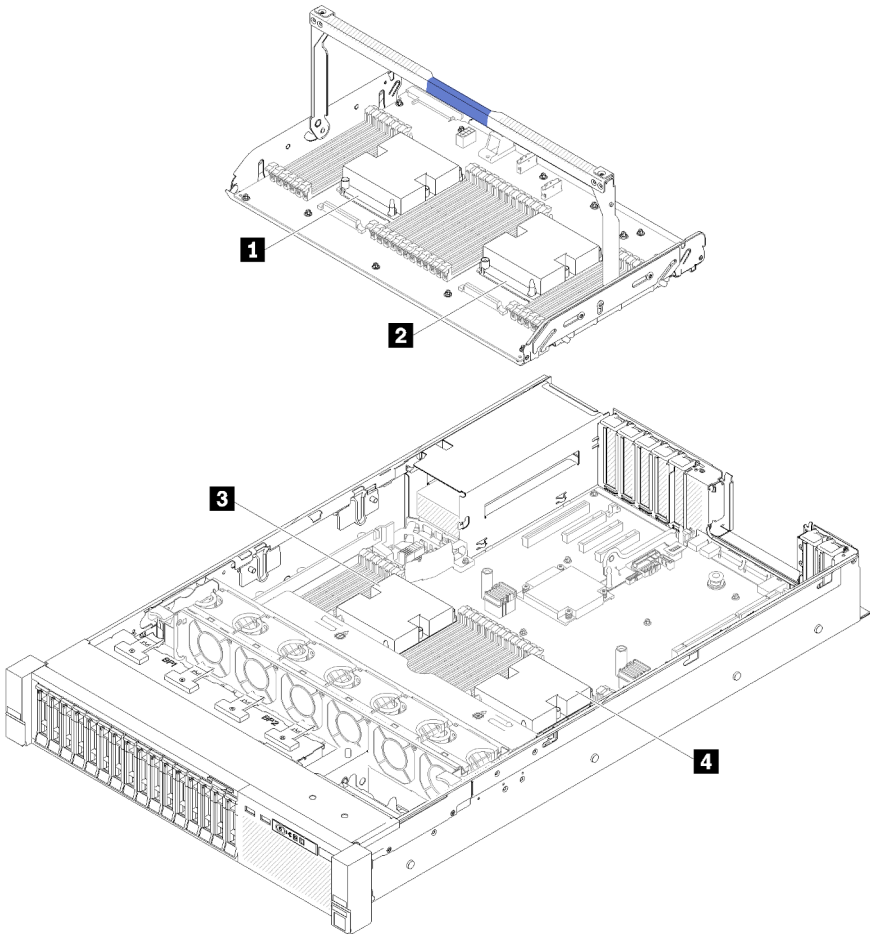

Figure 113. Processor locations

Table 45. Processor locations

1 Processor 3	2 Processor 4
3 Processor 1	4 Processor 2

Step 1. Remove the processor socket cover, if one is installed on the processor socket, by placing your fingers in the half-circles at each end of the cover and lifting it from the system board.

Step 2. Install the processor-heat-sink module on the system board.

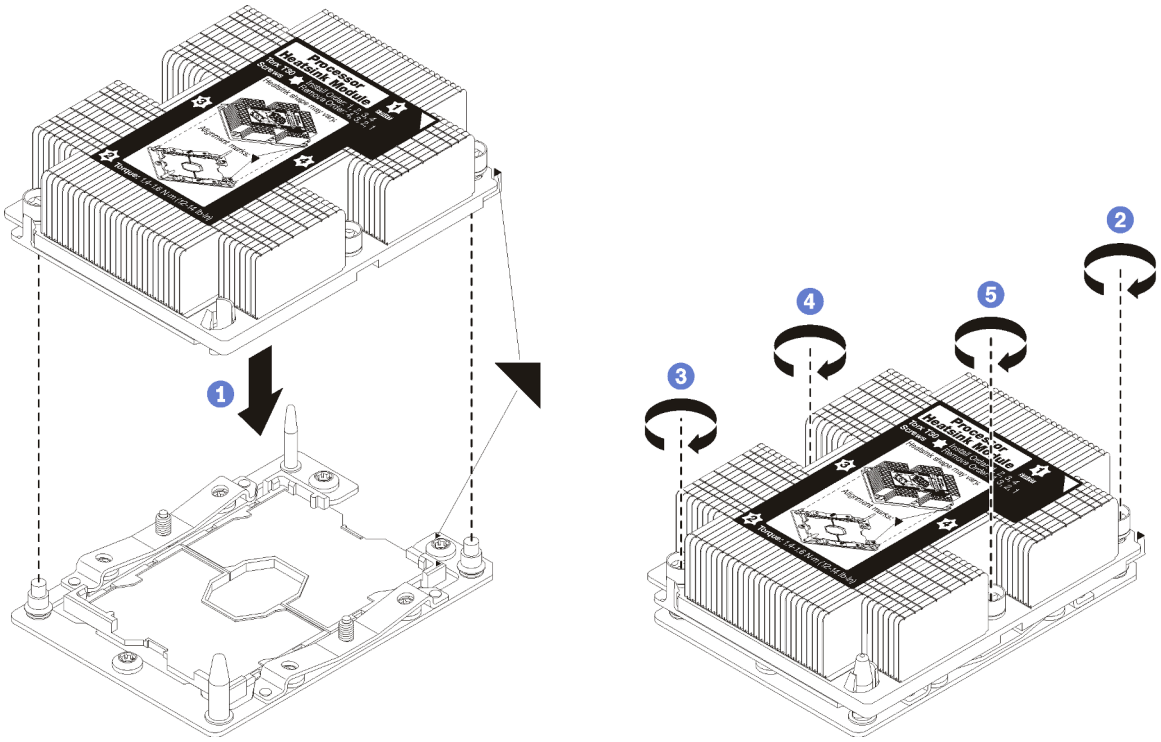

Figure 114. Installing a PHM

a. Align the triangular marks and guide pins on the processor socket with the PHM; then, insert the PHM into the processor socket.

   Attention: To prevent damage to components, make sure that you follow the indicated tightening sequence.

b. Fully tighten the Torx T30 captive fasteners *in the installation sequence shown* on the heat-sink label. Tighten the screws until they stop; then, visually inspect to make sure that there is no gap between the screw shoulder beneath the heat sink and the processor socket. (For reference, the torque required for the nuts to fully tighten is 1.4 - 1.6 newton-meters, 12 - 14 inch-pounds).

After you install a PHM:

1. If there are DIMMs to install, install them. See “Install a memory module” on page 86.
2. Reinstall the system board air baffle (see “Install the system board air baffle and the power interposer” on page 128) or processor and memory expansion tray and expansion tray air baffle (see “Install the processor and memory expansion tray” on page 122).
3. Reinstall the top cover (see “Install the top cover” on page 146).
4. Reconnect the power cords and any cables that you removed.
5. Power on the server and any peripheral devices.

Demo video

Watch the procedure on YouTube

Processor and memory expansion tray replacement

Use this procedure to remove or install expansion tray air baffle and processor and memory expansion tray.

Note: If your server comes with two processors, skip this section and go to "System board air baffle and the power interposer replacement" on page 126.

Remove the processor and memory expansion tray

Use this procedure to remove the processor and memory expansion tray.

Before removing the processor and memory expansion tray:

1. Read the safety information and installation guidelines (see "Safety" on page iii and "Installation Guidelines" on page 55).
2. Turn off the server and peripheral devices and disconnect the power cords and all external cables (see "Power off the server" on page 11).
3. If the server is installed in a rack, slide the server out on its rack slide rails to gain access to the top cover, or remove the server from the rack.
4. Remove the top cover (see "Remove the top cover" on page 145).
5. If you are replacing the processor and memory expansion tray, remove the expansion tray air baffle, DIMMs (see "Remove a memory module" on page 84), and PHMs (see "Remove a processor and heat sink" on page 110) on the expansion tray.

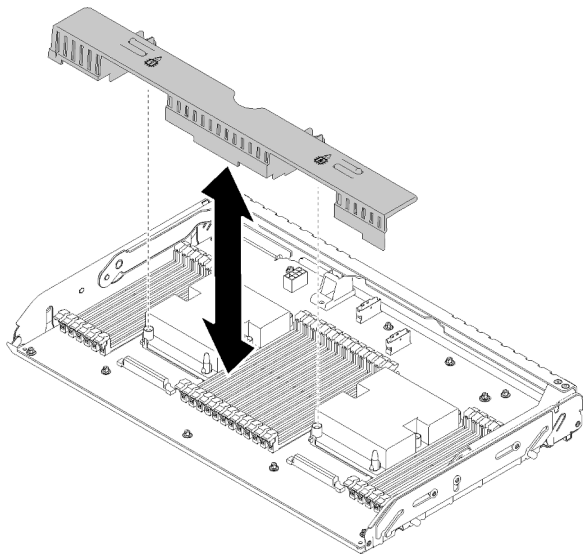

Figure 115. Expansion tray air baffle removal

Attention:

- Do not remove or install DIMMs and processors on the processor and memory expansion tray when the expansion tray is removed, for the instability might cause damages to components.

To remove the processor and memory expansion tray, complete the following steps:

Step 1. Slightly pull out power supply 2.

Attention: Do not remove the processor and memory expansion tray without physically disconnecting power supply 2.

Step 2. Grasp the handle of the processor and memory expansion tray; then, pull and rotate it all the way up until it is in the vertical position. This disengages the expansion tray from the system board.

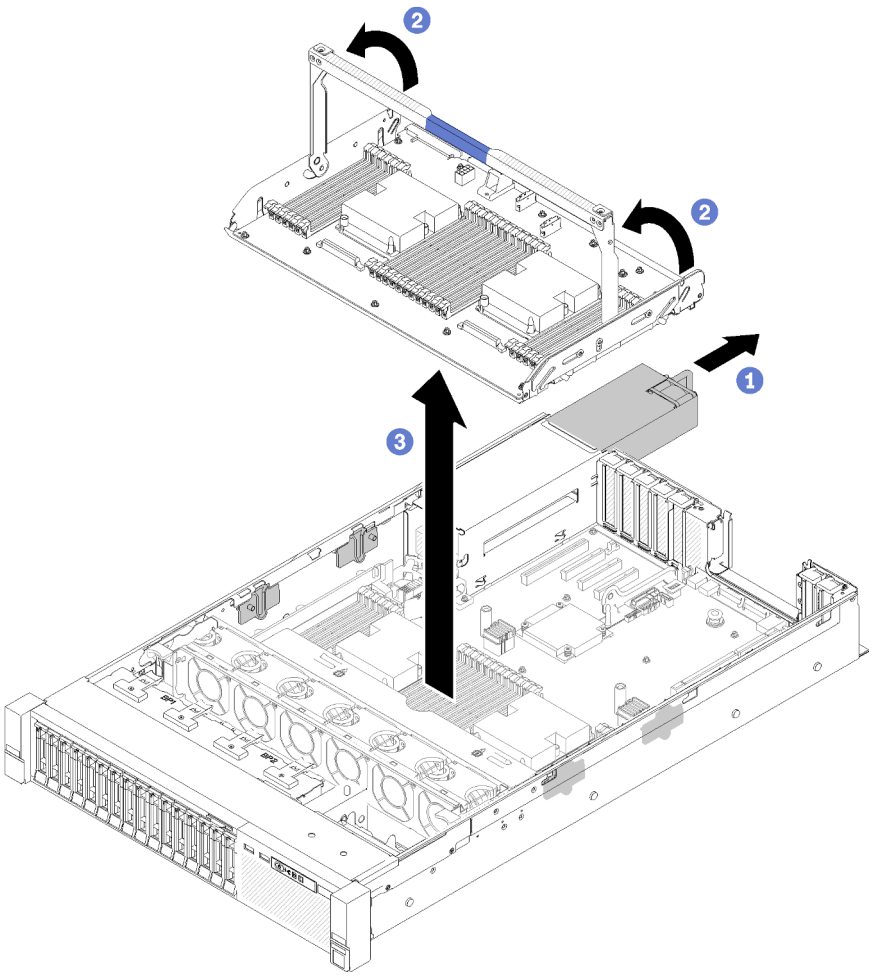

Figure 116. Processor and memory expansion tray removal

Step 3. Loosen the two screws that secure the expansion tray to the chassis.

Step 4. Grasp the handle and slowly lift the expansion tray from the server; then, set it on a flat surface.

After removing the processor and memory expansion tray:

- If you are instructed to return the component or optional device, follow all packaging instructions, and use any packaging materials for shipping that are supplied to you.

  Important: Before you return the system board, make sure that you install the processor socket dust covers from the new system board. To replace a processor socket dust cover:

  1. Take a dust cover from the processor socket assembly on the new system board, and orient it correctly above the processor socket assembly on the removed system board.
  2. Gently press down the dust cover legs to the processor socket assembly, pressing on the edges to avoid damage to the socket pins. You might hear a click on the dust cover is securely attached.
  3. **Make sure** that the dust cover is securely attached to the processor socket assembly.
- If you are planning to recycle the system board, follow the instructions in "Disassemble the processor and memory expansion tray for recycle" on page 174 for compliance with local regulations.

Demo video

Watch the procedure on YouTube

Install the processor and memory expansion tray

Use this procedure to install the processor and memory expansion tray.

Before installing the processor and memory expansion tray:

1. Read the safety information and installation guidelines (see “Safety” on page iii and “Installation Guidelines” on page 55).
2. Touch the static-protective package that contains the component to any unpainted metal surface on the server; then, remove it from the package and place it on a static-protective surface.

To install the processor and memory expansion tray, complete the following steps:

Step 1. If the power interposer and system board air baffle are installed, remove them (see “Remove the system board air baffle and the power interposer” on page 126).

Step 2. Install an expansion tray air baffle on the system board. Make sure it is properly installed before installing the processor and memory expansion tray.

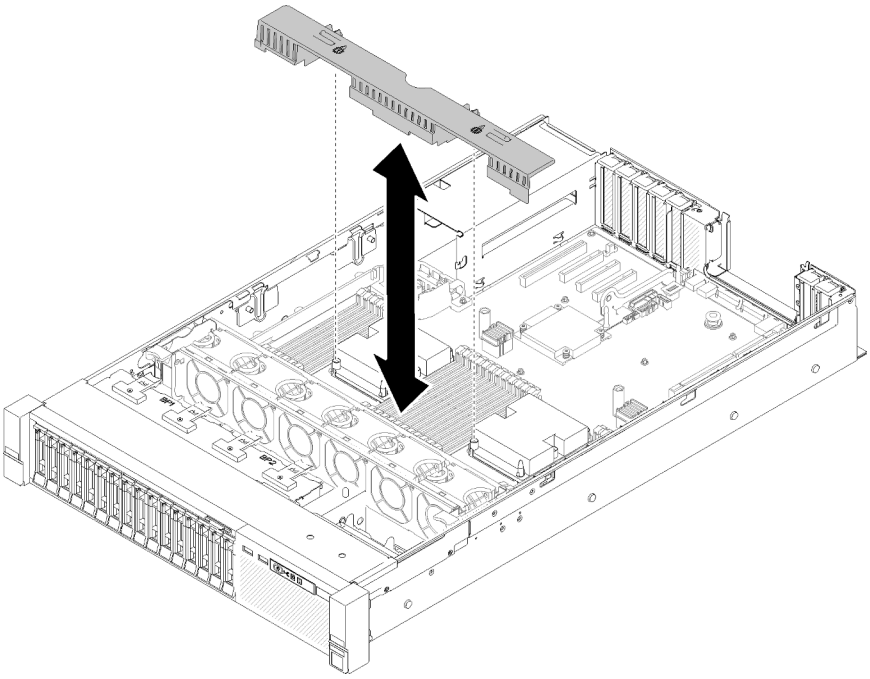

Figure 117. Expansion tray air baffle installation

Attention: Air baffle is required for airflow that creates proper cooling. Make sure proper air baffles for system configuration is installed before the power is turned on.

Step 3. Slightly slide power supply 2 out from the power supply bay (see “Remove a hot-swap power supply unit” on page 101).

Step 4. Grip on the blue touch point on the handle of the expansion tray, and lift it up; then, lower the tray vertically into the server with nailheads aligned to the slots on both sides.

Step 5. Rotate the handle all the way down. This connects and fix the expansion tray to the system board.

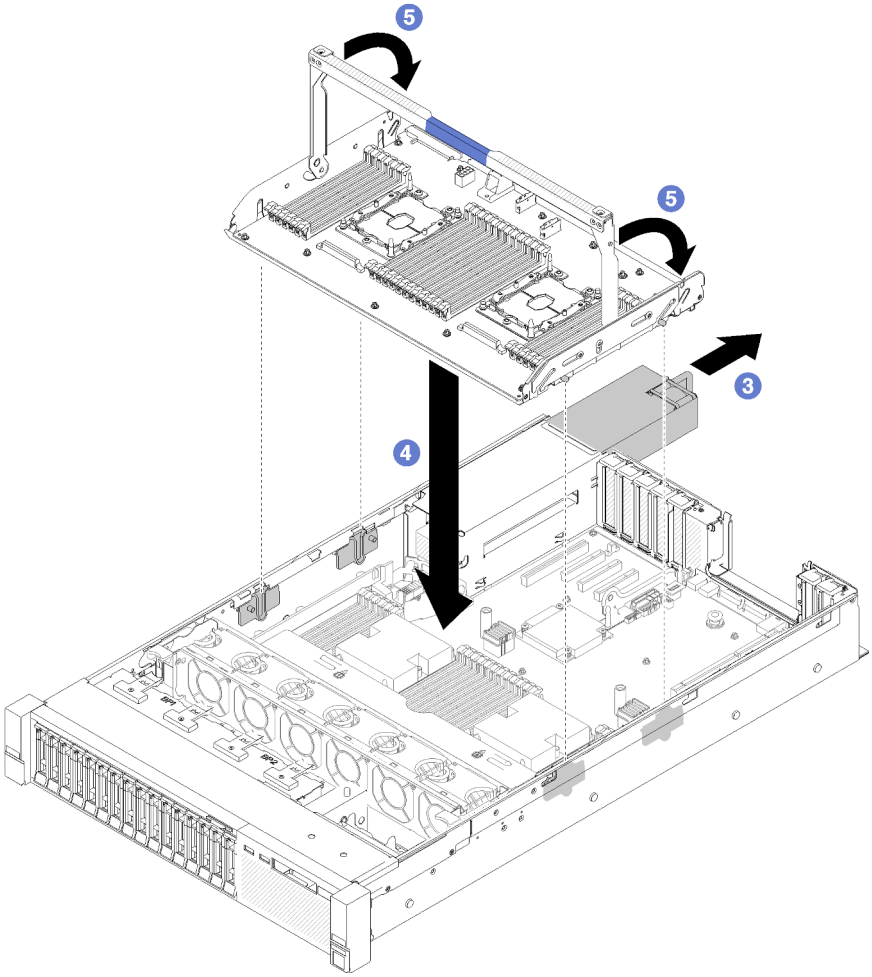

Figure 118. Processor and memory expansion tray installation

Step 6. Slide the power supply 2 back into the chassis.

Step 7. Install DIMMs (see “Install a memory module” on page 86), PHMs (see “Install a processor and heat sink” on page 114), and the expansion tray air baffle on the expansion tray.

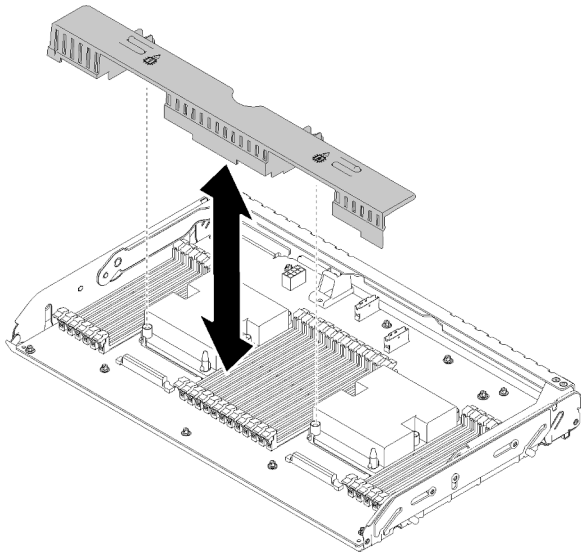

Figure 119. Expansion tray air baffle installation

Attention:

1. For the optimal performance, make sure both PHMs and corresponding DIMMs are installed to the processor and memory expansion tray.
2. Air baffle is required for airflow that creates proper cooling. Make sure proper air baffles for system configuration is installed before the power is turned on.

After installing the processor and memory expansion tray, complete the following steps:

1. Reinstall power supply 2 (see “Install a hot-swap power supply unit” on page 105).
2. Reinstall the top cover (see “Install the top cover” on page 146).
3. Reconnect the power cords and any cables that you removed.
4. Power on the server and any peripheral devices.

Demo video

Watch the procedure on YouTube

Security bezel replacement

Use this procedure to remove or install the security bezel.

Remove the security bezel

Follow the instructions in this section to remove the security bezel.

Before removing the security bezel:

1. Read the safety information and installation guidelines (see “Safety” on page iii and “Installation Guidelines” on page 55).
2. If the server is installed in a rack, slightly slide out or remove the server from the rack.

To remove the security bezel, complete the following steps:

Step 1. Insert the key that comes with the server and rotate it clockwise to unlock the security bezel to the open position.

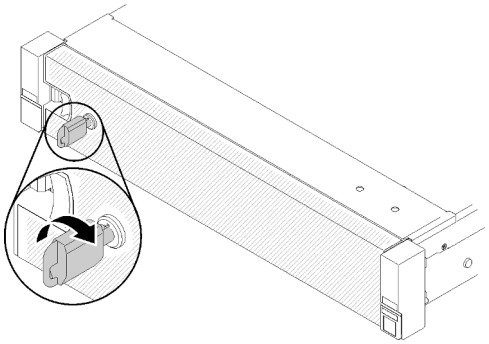

Figure 120. Unlocking the security bezel

Step 2. Press on the release latch and pivot the security bezel outward to remove it from the chassis.

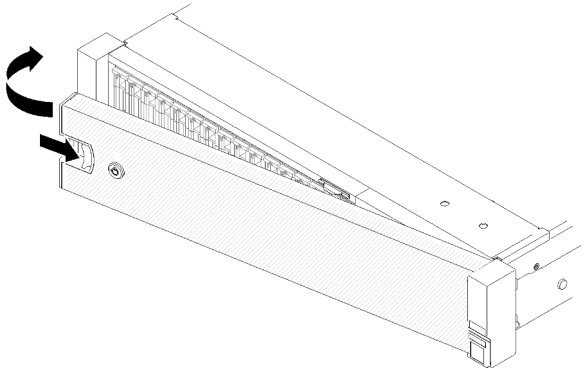

Figure 121. Security bezel removal

Demo video

Watch the procedure on YouTube

Install the security bezel

Install the security bezel by pivoting the security bezel inward until the other side clicks into place, and then locking the security bezel.

Before installing the security bezel:

1. Read the safety information and installation guidelines (see “Safety” on page iii and “Installation Guidelines” on page 55).
2. If you have removed the rack handles, reinstall it (see *ThinkSystem SR850 Rack Installation Guide*).

Step 1. Carefully insert the tabs on the security bezel into the slots on the right rack handle. Then, press and hold the release latch, and pivot the security bezel inward until the other side clicks into place.

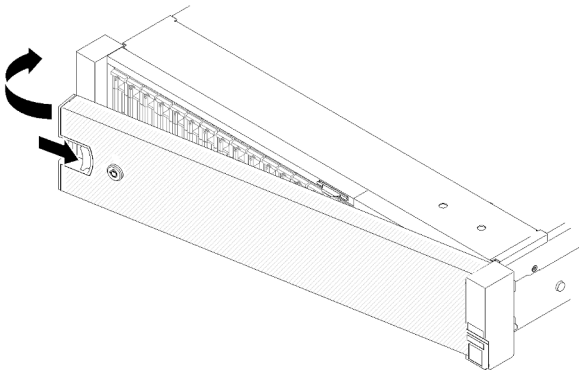

Figure 122. Security bezel installation

Step 2. Use the key to lock the security bezel to the closed position.

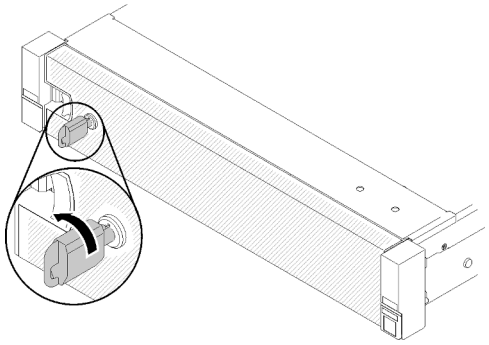

Figure 123. Locking the security bezel

After installing the security bezel, push or install the server into the rack if necessary. See ThinkSystem SR850 Rack Installation Guide that comes with the rail kit.

Demo video

Watch the procedure on YouTube

System board air baffle and the power interposer replacement

Use this procedure to install or remove the system board air baffle and the power interposer.

Note: If your server comes with four processors, skip this section and go to “Processor and memory expansion tray replacement” on page 119.

Remove the system board air baffle and the power interposer

Follow the instructions in this section to remove the system board air baffle and the power interposer.

Note: If the server comes with a processor and memory expansion tray, it doesn’t come with this component

Before removing the system board air baffle, complete the following steps:

1. Read the safety information and installation guidelines (see “Safety” on page iii and “Installation Guidelines” on page 55).

2. Turn off the server and peripheral devices and disconnect the power cords and all external cables (see “Power off the server” on page 11).
3. If the server is installed in a rack, slide the server out on its rack slide rails to gain access to the top cover, or remove the server from the rack.
4. Remove the top cover (see “Remove the top cover” on page 145).

To remove the system board air baffle, complete the following steps:

Step 1. Slightly slide power supply 2 out from the power supply bay (see “Remove a hot-swap power supply unit” on page 101).

Step 2. Lift the power interposer from the server, and set it aside.

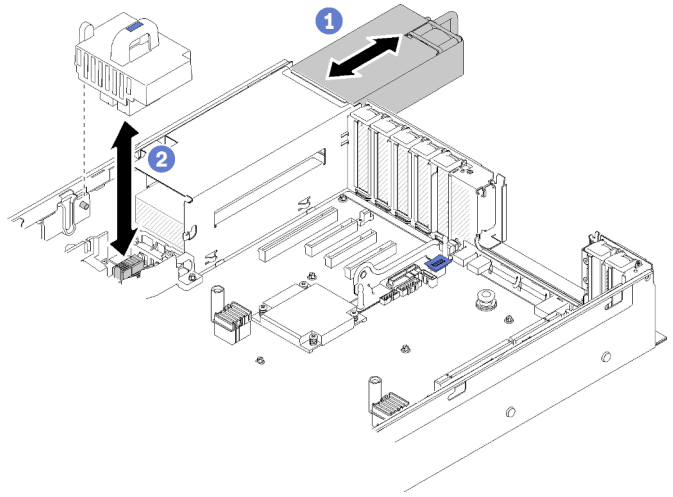

Figure 124. Power interposer removal

Step 3. Lift the system board air baffle from the server, and set it aside.

Attention: Air baffle is required for airflow that creates proper cooling. Make sure proper air baffles for system configuration is installed before the power is turned on.

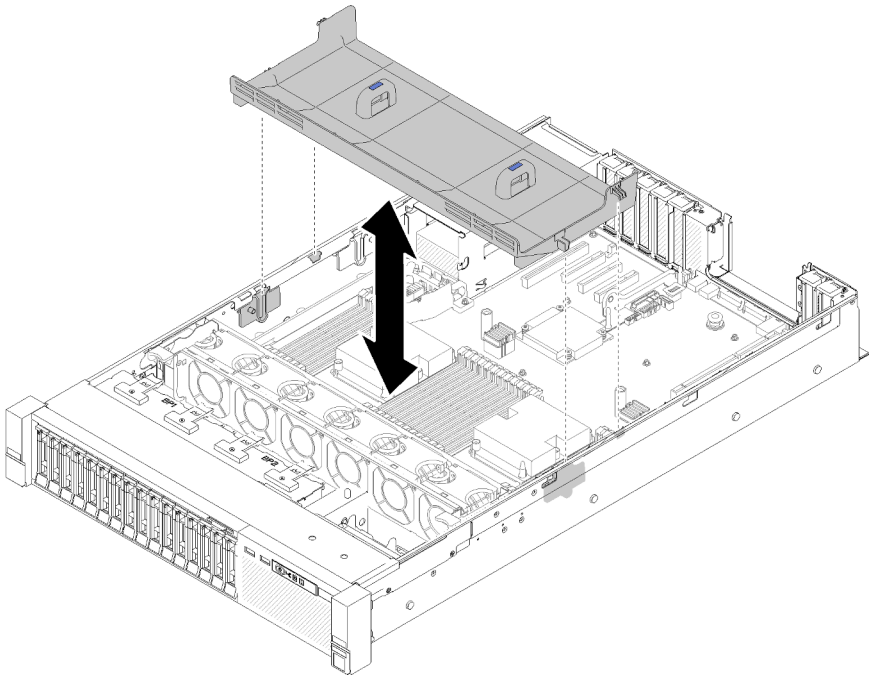

Figure 125. System board air baffle removal

If you are instructed to return the component or optional device, follow all packaging instructions, and use any packaging materials for shipping that are supplied to you.

Install the system board air baffle and the power interposer

Use this procedure to install the system board air baffle and the power interposer.

Before installing the system board air baffle and the power interposer:

1. Read the safety information and installation guidelines (see “Safety” on page iii and “Installation Guidelines” on page 55).
2. Touch the static-protective package that contains the component to any unpainted metal surface on the server; then, remove it from the package and place it on a static-protective surface.

To install the system board air baffle and the power interposer, complete the following steps:

Step 1. Slightly slide power supply 2 out from the power supply bay (see “Remove a hot-swap power supply unit” on page 101).

Step 2. Align the power interposer to the server, and lower it until it sits firmly in place.

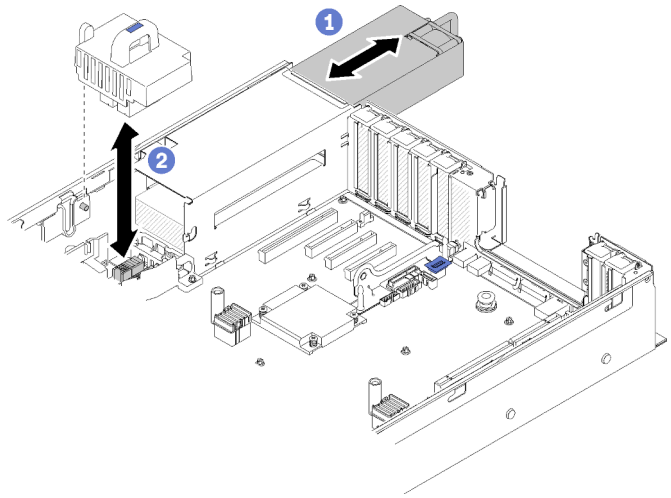

Figure 126. Power interposer installation

Step 3. Align the two pairs of nailheads of the system board air baffle to slots, and lower it into the server.

Attention: Air baffle is required for airflow that creates proper cooling. Make sure proper air baffles for system configuration is installed before the power is turned on.

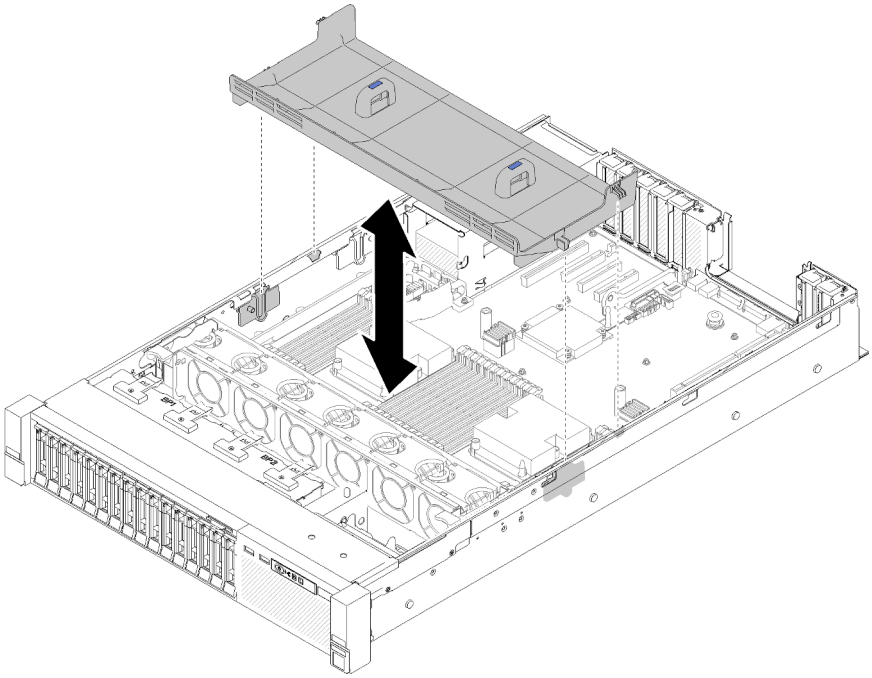

Figure 127. System board air baffle installation

After installing the system board air baffle, complete the following steps:

1. Reinstall the top cover (see "Install the top cover" on page 146).
2. Reconnect the power cords and any cables that you removed.
3. Install the server in the rack.
4. Power on the server and any peripheral devices.

System board replacement

Use this procedure to remove or install the system board.

Remove the system board

Use this procedure to remove the system board.

Attention: Removing and installing this component requires trained technicians. Do no attempt to remove or install it without proper training.

Before removing the system board:

1. Record all system configuration information, such as Lenovo XClarity Controller (XCC) IP addresses, vital product data, and the machine type, model number, serial number, Universally Unique Identifier, and asset tag of the server.
2. Use the Lenovo XClarity Essentials to save the system configuration to external media.
3. Save the system-event log to external media.

   Note: When replacing the system board, always update the server with the latest firmware or restore the pre-existing firmware. Make sure that you have the latest firmware or a copy of the pre-existing firmware before you proceed.
4. Read the safety information and installation guidelines (see “Safety” on page iii and “Installation Guidelines” on page 55).
5. Turn off the server and peripheral devices and disconnect the power cords and all external cables (see “Power off the server” on page 11).
6. If the server is installed in a rack, slide the server out on its rack slide rails to gain access to the top cover, or remove the server from the rack.
7. Remove the top cover (see “Remove the top cover” on page 145).

To remove the system board, complete the following steps:

Step 1. Remove the power supply unit(s) (see “Remove a hot-swap power supply unit” on page 101).

Step 2. Remove the system board air baffle and power interposer (see “Remove the system board air baffle and the power interposer” on page 126) or the processor and memory expansion tray and the expansion tray air baffles (see “Remove the processor and memory expansion tray” on page 120).

Step 3. Remove the fan cage assembly (see “Remove the fan cage assembly” on page 65).

Step 4. Disconnect all cables from the system board. Make a list of each cable as you disconnect it and use it as a checklist after installing the new system board.

Step 5. Remove all the memory modules from the system board, and set them aside on a static-protective surface for reinstallation (see “Remove a memory module” on page 84).

Important: Record the slot number of each memory module before removing it, and make sure to install it back to the exact same slot on the new system board later.

Step 6. Remove the PCIe riser-card if it has been installed (see “Remove the PCIe riser-card assembly” on page 93).

Step 7. Remove the LOM adapter if it has been installed (see “Remove the LOM adapter” on page 75).

Step 8. Remove all the other adapters installed on the system board (see “Remove an adapter” on page 98).

Step 9. Disconnect the USB 3.0 cable of operator panel tray assembly and remove it vertically from the system board.

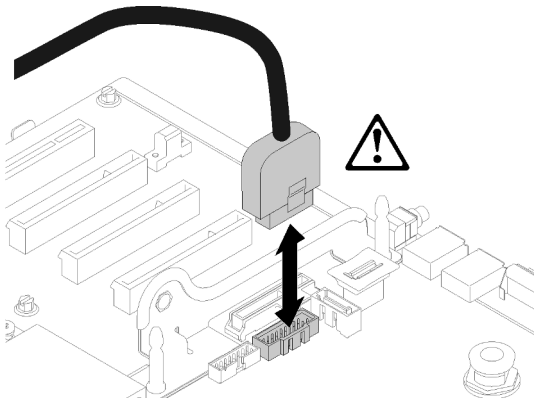

Figure 128. Disconnecting USB 3.0 vertically

Step 10. Remove all the PHMs installed on the system board (see “Install a processor and heat sink” on page 114).

Step 11. Remove the drive backplanes and cables connected to the system board (see “Remove a drive backplane” on page 58).

Step 12. If there is an installed TCM/TPM, remove it (see “Remove the TCM/TPM adapter (for Chinese Mainland only)” on page 140).

Step 13. Grasp the system board handle and thumbnail, and slide the system board toward the front of the server.

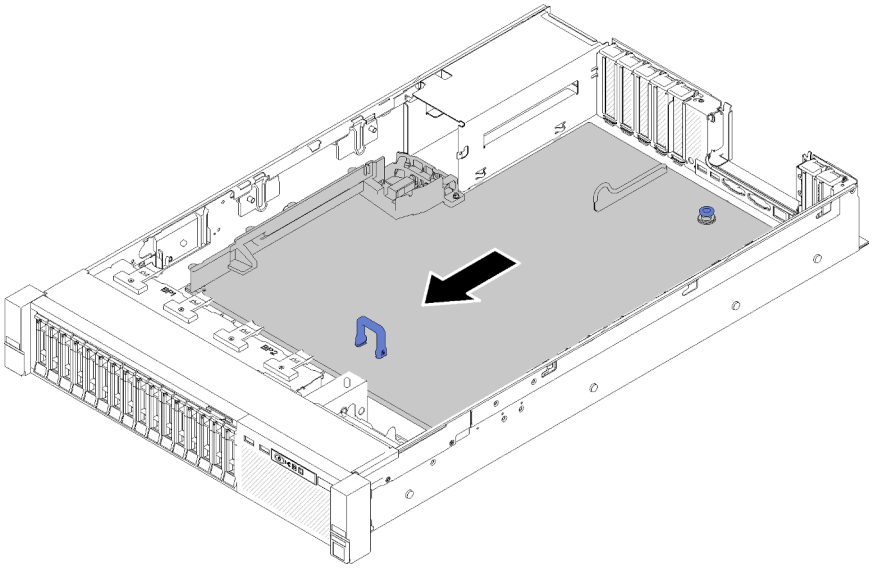

Figure 129. System board removal

Step 14. Rotate the long side of the system board up, and remove the board from the server.

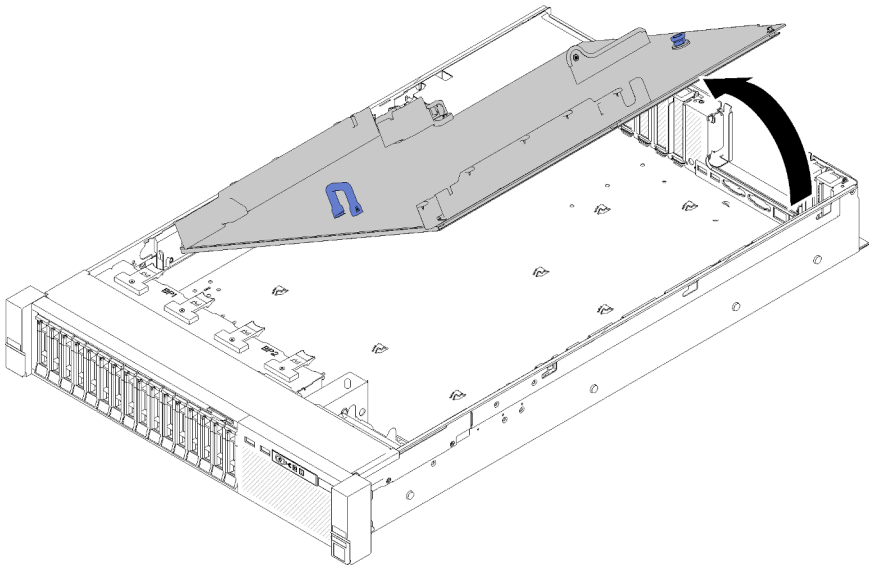

Figure 130. System board removal

Note: This handle only serves the purpose of removing system board. Do not attempt to lift the whole server with it.

After removing the system board:

- If you are instructed to return the component or optional device, follow all packaging instructions, and use any packaging materials for shipping that are supplied to you.

  Important: Before you return the system board, make sure that you install the processor socket dust covers from the new system board. To replace a processor socket dust cover:

  1. Take a dust cover from the processor socket assembly on the new system board, and orient it correctly above the processor socket assembly on the removed system board.
  2. Gently press down the dust cover legs to the processor socket assembly, pressing on the edges to avoid damage to the socket pins. You might hear a click on the dust cover is securely attached.
  3. **Make sure** that the dust cover is securely attached to the processor socket assembly.
- If you are planning to recycle the system board, follow the instructions in "Disassemble the system board for recycle" on page 173 for compliance with local regulations.

Demo video

Watch the procedure on YouTube

Install the system board

Use this procedure to install the system board.

Attention: Removing and installing this component requires trained technicians. Do no attempt to remove or install it without proper training.

Before installing the system board:

1. Read the safety information and installation guidelines (see "Safety" on page iii and "Installation Guidelines" on page 55).

2. Touch the static-protective package that contains the component to any unpainted metal surface on the server; then, remove it from the package and place it on a static-protective surface.

To install the system board, complete the following steps:

Step 1. Lower the short side of the system board and align it with the slots in the server; then, lower the longer side.

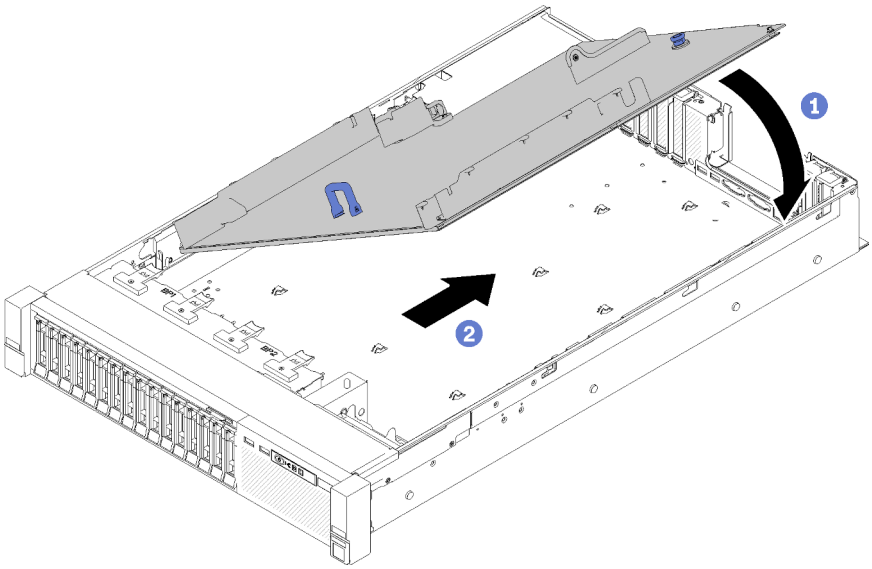

Figure 131. System board installtion

Step 2. Slide the system board toward the rear of the server to secure it in place. To ensure that the system board is properly installed, gently tug handle of system board forward, a properly installed system board will not release and slide forward.

Step 3. Install the TCM/TPM to the system board (see “Install the TCM/TPM adapter (for Chinese Mainland only)” on page 142).

Step 4. Install each memory module to the same slot on the new system board as on the defective system board (see “Install a memory module” on page 86) until all the memory modules are installed.

Step 5. Install the PHMs (see “Install a processor and heat sink” on page 114).

Step 6. Install PCIe riser-card assembly if necessary (see “Install the PCIe riser-card assembly” on page 96).

Step 7. Install adapters removed earlier (see “Install an adapter” on page 99).

Step 8. Install LOM adapter if necessary (see “Install the LOM adapter” on page 77).

Step 9. Reconnect the cables disconnected earlier.

Step 10. Reinstall the power supplies (see “Install a hot-swap power supply unit” on page 105).

Step 11. Reinstall the drive backplanes (see “Install a drive backplane” on page 59).

After installing the system board, complete the following steps:

1. Reinstall the system board air baffle and the power interposer (see “Install the system board air baffle and the power interposer” on page 128) or the processor and memory expansion tray and expansion tray air baffles (see “Install the processor and memory expansion tray” on page 122).
2. Push the power supplies into the bays until they click into place.

3. Install any components that you removed from the failing system board. See the related topics in "Hardware replacement procedures."
4. Update the machine type and serial number with new vital product data (VPD). Use the Lenovo XClarity Provisioning Manager to update the machine type and serial number. See "Update the machine type and serial number" on page 134.
5. Enable TPM/TCM. See "Enable TPM/TCM" on page 136
6. Optionally, enable Secure Boot. See "Enable UEFI Secure Boot" on page 139.

Demo video

Watch the procedure on YouTube

Update the machine type and serial number

After the system board is replaced by trained service technicians, the machine type and serial number must be updated.

There are two methods available to update the machine type and serial number:

- From Lenovo XClarity Provisioning Manager

  To update the machine type and serial number from Lenovo XClarity Provisioning Manager:

  1. Start the server and press the key according to the on-screen instructions to display the Lenovo XClarity Provisioning Manager interface.
  2. If the power-on Administrator password is required, enter the password.
  3. From the System Summary page, click **Update VPD**.
  4. Update the machine type and serial number.

- From Lenovo XClarity Essentials OneCLI

  Lenovo XClarity Essentials OneCLI sets the machine type and serial number in the Lenovo XClarity Controller. Select one of the following methods to access the Lenovo XClarity Controller and set the machine type and serial number:

  – Operate from the target system, such as LAN or keyboard console style (KCS) access
  – Remote access to the target system (TCP/IP based)

  To update the machine type and serial number from Lenovo XClarity Essentials OneCLI:

  1. Download and install Lenovo XClarity Essentials OneCLI.

     To download Lenovo XClarity Essentials OneCLI, go to the following site:

     https://datacentersupport.lenovo.com/solutions/HT116433

  2. Copy and unpack the OneCLI package, which also includes other required files, to the server. Make sure that you unpack the OneCLI and the required files to the same directory.
  3. After you have Lenovo XClarity Essentials OneCLI in place, type the following commands to set the machine type and serial number:

     ```
     onecli config set SYSTEM_PROD_DATA.SysInfoProdName <m/t_model> [access_method]
     onecli config set SYSTEM_PROD_DATA.SysInfoSerialNum <s/n> [access_method]
     onecli config set SYSTEM_PROD_DATA.SysInfoProdIdentifier <system model> [access_method]
     onecli config set SYSTEM_PROD_DATA.SysInfoProdIdentifierEx <system model> --override [access_method]
     ```

     Where:

     <m/t_model>

The server machine type and model number. Type `xxxxyyy`, where *xxxx* is the machine type and *yyy* is the server model number.

<s/n>
The serial number on the server. Type `zzzzzzz`, where *zzzzzzz* is the serial number.

<system model>
The system model. Type `system yyyyyyyy`, where *yyyyyyyy* is the product identifier.

[access_method]
The access method that you select to use from the following methods:

- Online authenticated LAN access, type the command:
  `[--bmc-username <xcc_user_id> --bmc-password <xcc_password>]`

  Where:

  xcc_user_id
  The BMC/IMM/XCC account name (1 of 12 accounts). The default value is USERID.

  xcc_password
  The BMC/IMM/XCC account password (1 of 12 accounts).

  Example commands are as follows:
  ```
  onecli config set SYSTEM_PROD_DATA.SysInfoProdName <m/t_model> --bmc-username <xcc_user_id>
  --bmc-password <xcc_password>
  onecli config set SYSTEM_PROD_DATA.SysInfoSerialNum <s/n> --bmc-username <xcc_user_id> --bmc-
  password <xcc_password>
  onecli config set SYSTEM_PROD_DATA.SysInfoProdIdentifier <system model> --bmc-username xcc_user_
  id --bmc-password xcc_password
  onecli config set SYSTEM_PROD_DATA.SysInfoProdIdentifierEx <system model> --override --bmc-
  username xcc_user_id --bmc-password xcc_password
  ```
- Online KCS access (unauthenticated and user restricted):

  You do not need to specify a value for *access_method* when you use this access method.

  Example commands are as follows:
  ```
  onecli config set SYSTEM_PROD_DATA.SysInfoProdName <m/t_model>
  onecli config set SYSTEM_PROD_DATA.SysInfoSerialNum <s/n>
  onecli config set SYSTEM_PROD_DATA.SysInfoProdIdentifier <system model>
  onecli config set SYSTEM_PROD_DATA.SysInfoProdIdentifierEx <system model> --override
  ```

  Note: The KCS access method uses the IPMI/KCS interface, which requires that the IPMI driver be installed.
- Remote LAN access, type the command:
  `[--bmc <xcc_user_id>:<xcc_password>@<xcc_external_ip>]`

  Where:

  xcc_external_ip
  The BMC/IMM/XCC IP address. There is no default value. This parameter is required.

  xcc_user_id
  The BMC/IMM/XCC account (1 of 12 accounts). The default value is USERID.

  xcc_password
  The BMC/IMM/XCC account password (1 of 12 accounts).

  Note: BMC, IMM, or XCC internal LAN/USB IP address, account name, and password are all valid for this command.

Example commands are as follows:

```
onecli config set SYSTEM_PROD_DATA.SysInfoProdName <m/t_model> --bmc <xcc_user_id>:<xcc_
password>@<xcc_external_ip>
onecli config set SYSTEM_PROD_DATA.SysInfoSerialNum <s/n> --bmc <xcc_user_id>:<xcc_
password>@<xcc_external_ip>
onecli config set SYSTEM_PROD_DATA.SysInfoProdIdentifier <system model> --bmc xcc_user_id:xcc_
password@xcc_external_ip
onecli config set SYSTEM_PROD_DATA.SysInfoProdIdentifierEx <system model> --override --bmc xcc_
user_id:xcc_password@xcc_external_ip
```

4. Reset the Lenovo XClarity Controller to the factory defaults. See “Resetting the BMC to Factory Default” section in the XCC documentation compatible with your server at https://pubs.lenovo.com/lxcc-overview/.

Enable TPM/TCM

The server supports Trusted Platform Module (TPM), Version 1.2 or Version 2.0

Note: For customers in Chinese Mainland, integrated TPM is not supported. However, customers in Chinese Mainland can install a Trusted Cryptographic Module (TCM) adapter or a NationZ TPM adapter (sometimes called a daughter card). Customers in Chinese Mainland should download Lenovo Business Vantage to enable TCM. For more information, see https://datacentersupport.lenovo.com/en/en/downloads/ds548665-18alenovo_business_vantage_-release_letter-_20171205_v221770130-for-unknown-os and https://download.lenovo.com/servers/mig/2021/02/09/43299/LBV_v2.2.177.0130_readme_20180903.txt.

When a system board is replaced, you must make sure that the TPM/TCM policy is set correctly.

CAUTION:
Take special care when setting the TPM/TCM policy. If it is not set correctly, the system board can become unusable.

Set the TPM policy

By default, a replacement system board is shipped with the TPM policy set to **undefined**. You must modify this setting to match the setting that was in place for the system board that is being replaced.

There are two methods available to set the TPM policy:

- From Lenovo XClarity Provisioning Manager

  To set the TPM policy from Lenovo XClarity Provisioning Manager:

  1. Start the server and press the key according to the on-screen instructions to display the Lenovo XClarity Provisioning Manager interface.
  2. If the power-on Administrator password is required, enter the password.
  3. From the System Summary page, click **Update VPD**.
  4. Set the policy to one of the following settings.
     - **NationZ TPM 2.0 enabled - China only**. Customers in the Chinese Mainland should choose this setting if a NationZ TPM 2.0 adapter is installed.
     - **TPM enabled - ROW**. Customers outside of the Chinese Mainland should choose this setting.
     - **Permanently disabled**. Customers in the Chinese Mainland should use this setting if no TPM adapter is installed.

     Note: Although the setting **undefined** is available as a policy setting, it should not be used.

- From Lenovo XClarity Essentials OneCLI

Note: Please note that a Local IPMI user and password must be setup in Lenovo XClarity Controller for remote accessing to the target system.

To set the TPM policy from Lenovo XClarity Essentials OneCLI:

1. Read TpmTcmPolicyLock to check whether the TPM_TCM_POLICY has been locked:
   `OneCli.exe config show imm.TpmTcmPolicyLock --override --imm <userid>:<password>@<ip_address>`

   Note: The imm.TpmTcmPolicyLock value must be 'Disabled', which means TPM_TCM_POLICY is NOT locked and changes to the TPM_TCM_POLICY are permitted. If the return code is ‘Enabled’ then no changes to the policy are permitted. The planar may still be used if the desired setting is correct for the system being replaced.
2. Configure the TPM_TCM_POLICY into XCC:
   - For customers in Chinese Mainland with no TPM, or customers that require to disable TPM:
     `OneCli.exe config set imm.TpmTcmPolicy "NeitherTpmNorTcm" --override --imm <userid>:<password>@<ip_address>`
   - For customers in Chinese Mainland that require to enable TPM:
     `OneCli.exe config set imm.TpmTcmPolicy "NationZTPM20Only" --override --imm <userid>:<password>@<ip_address>`
   - For customers outside Chinese Mainland that require to enable TPM:
     `OneCli.exe config set imm.TpmTcmPolicy "TpmOnly" --override --imm <userid>:<password>@<ip_address>`
3. Issue reset command to reset system:
   `OneCli.exe misc ospower reboot --imm <userid>:<password>@<ip_address>`
4. Read back the value to check whether the change has been accepted:
   `OneCli.exe config show imm.TpmTcmPolicy --override --imm <userid>:<password>@<ip_address>`

   Notes:

   - If the read back value is matched it means the TPM_TCM_POLICY has been set correctly.

     imm.TpmTcmPolicy is defined as below:

     - Value 0 use string “Undefined” , which means UNDEFINED policy.
     - Value 1 use string “NeitherTpmNorTcm”, which means TPM_PERM_DISABLED.
     - Value 2 use string “TpmOnly”, which means TPM_ALLOWED.
     - Value 4 use string “NationZTPM20Only”, which means NationZ_TPM20_ALLOWED.
   - Below 4 steps must also be used to ‘lock’ the TPM_TCM_POLICY when using OneCli/ASU commands:
5. Read TpmTcmPolicyLock to check whether the TPM_TCM_POLICY has been locked , command as below:
   `OneCli.exe config show imm.TpmTcmPolicyLock --override --imm <userid>:<password>@<ip_address>`

   The value must be 'Disabled', it means TPM_TCM_POLICY is NOT locked and must be set.
6. Lock the TPM_TCM_POLICY:
   `OneCli.exe config set imm.TpmTcmPolicyLock "Enabled"--override --imm <userid>:<password>@<ip_address>`
7. Issue reset command to reset system, command as below:
   `OneCli.exe misc ospower reboot --imm <userid>:<password>@<ip_address>`

   During the reset, UEFI will read the value from imm.TpmTcmPolicyLock, if the value is 'Enabled' and the imm.TpmTcmPolicy value is valid, UEFI will lock the TPM_TCM_POLICY setting.

   Note: The valid values for imm.TpmTcmPolicy include 'NeitherTpmNorTcm', 'TpmOnly', and 'NationZTPM20Only'.

If the imm.TpmTcmPolicyLock is set as 'Enabled' but imm.TpmTcmPolicy value is invalid, UEFI will reject the 'lock' request and change imm.TpmTcmPolicyLock back to 'Disabled'.

8. Read back the value to check whether the ‘Lock’ is accepted or rejected. Command as below:
   `OneCli.exe config show imm.TpmTcmPolicy --override --imm <userid>:<password>@<ip_address>`

   Note: If the read back value is changed from 'Disabled' to 'Enabled' that means the TPM_TCM_POLICY has been locked successfully. There is no method to unlock a policy once it has been set other than replacing system board.

   imm.TpmTcmPolicyLock is defined as below:

   Value 1 uses string “Enabled" , which means lock the policy. Other values are not accepted.

Assert Physical Presence

Before you can assert Physical Presence, the Physical Presence Policy must be enabled. By default, the Physical Presence Policy is enabled with a timeout of 30 minutes.

There are two ways to assert the Physical Presence:

1. If the Physical Presence Policy is enabled, you can assert Physical Presence through the Lenovo XClarity Provisioning Manager or through the Lenovo XClarity Controller.
2. Switch the hardware jumpers on the system board.

Notes: If the Physical Presence Policy has been disabled:

1. Set the hardware Physical Presence jumper on the system board to assert Physical Presence.
2. Enable the Physical Presence Policy using either F1 (UEFI Settings) or Lenovo XClarity Essentials OneCLI.

Assert Physical Presence through the Lenovo XClarity Controller

Complete the following steps to assert Physical Presence through the Lenovo XClarity Controller:

1. Log in to the Lenovo XClarity Controller interface.

   For information about logging in to the Lenovo XClarity Controller, see the “Opening and Using the XClarity Controller Web Interface” section in the XCC documentation version compatible with your server at https://pubs.lenovo.com/lxcc-overview/.
2. Click **BMC Configuration → Security** and verify that Physical Presence is set to **assert**.

Assert Physical Presence through the hardware

You can also assert hardware Physical Presence through the use of a jumper on the system board. For more information about asserting hardware Physical Presence through the use of a jumper, see “Switches, jumpers, and buttons” on page 26.

Set the TPM version

To be able to set the TPM version, Physical Presence must be asserted.

The Lenovo XClarity Provisioning Manager or the Lenovo XClarity Essentials OneCLI can be used to set the TPM version.

To set the TPM version:

1. Download and install Lenovo XClarity Essentials OneCLI.
   a. Go to http://datacentersupport.lenovo.com and navigate to the support page for your server.
   b. Click **Drivers & Software**.

c. Navigate to the version of Lenovo XClarity Essentials OneCLI for your operating system and download the package.

2. Run the following command to set the TPM version:

   Note: You can change the TPM version from 1.2 to 2.0 and back again. However, you can toggle between versions a maximum of 128 times.

   To set the TPM version to version 2.0:

   ```
   OneCli.exe config set TrustedComputingGroup.DeviceOperation "Update to TPM2.0 compliant"
   --bmc userid:password@ip_address
   ```

   To set the TPM version to version 1.2:

   ```
   OneCli.exe config set TrustedComputingGroup.DeviceOperation "Update to TPM1.2 compliant"
   --bmc userid:password@ip_address
   ```

   where:

   - <*userid*>:<*password*> are the credentials used to access the BMC (Lenovo XClarity Controller interface) of your server. The default user ID is USERID, and the default password is PASSW0RD (zero, not an uppercase o)
   - <*ip_address*> is the IP address of the BMC.

   For more information about the Lenovo XClarity Essentials OneCLI `set` command, see:

   https://pubs.lenovo.com/lxce-onecli/onecli_r_set_command

3. Alternatively, you can use the following Advanced Settings Utility (ASU) commands:

   To set the TPM version to version 2.0:

   ```
   asu64 set TPMVersion.TPMVersion "Update to TPM2.0 compliant" --host <ip_address>
   --user <userid> --password <password> --override
   ```

   To set the TPM version to version 1.2:

   ```
   asu64 set TPMVersion.TPMVersion "Update to TPM1.2 compliant" --host <ip_address>
   --user <userid> --password <password> --override
   ```

   where:

   - <*userid*> and <*password*> are the credentials used to the BMC (Lenovo XClarity Controller interface) of your server. The default user ID is USERID, and the default password is PASSW0RD (zero, not an uppercase o)
   - <*ip_address*> is the IP address of the BMC.

Enable UEFI Secure Boot

Optionally, you can enable UEFI Secure Boot.

There are two methods available to enable UEFI Secure Boot:

- From Lenovo XClarity Provisioning Manager

  To enable UEFI Secure Boot from Lenovo XClarity Provisioning Manager:

  1. Start the server and press the key specified in the on-screen instructions to display the Lenovo XClarity Provisioning Manager interface. (For more information, see the “Startup” section in the LXPM documentation compatible with your server at https://pubs.lenovo.com/lxpm-overview/.)
  2. If the power-on Administrator password is required, enter the password.

3. From the UEFI Setup page, click **System Settings → Security → Secure Boot**.
4. Enable Secure Boot and save the settings.

- From Lenovo XClarity Essentials OneCLI

  To enable UEFI Secure Boot from Lenovo XClarity Essentials OneCLI:

  1. Download and install Lenovo XClarity Essentials OneCLI.

     To download Lenovo XClarity Essentials OneCLI, go to the following site:

     https://datacentersupport.lenovo.com/solutions/HT116433

  2. Run the following command to enable Secure Boot:
     `OneCli.exe config set SecureBootConfiguration.SecureBootSetting Enabled --bmc` *<userid>*:*<password>*`@`*<ip_address>*

     where:

     – *<userid>:<password>* are the credentials used to access the BMC (Lenovo XClarity Controller interface) of your server. The default user ID is USERID, and the default password is PASSW0RD (zero, not an uppercase o)

     – *<ip_address>* is the IP address of the BMC.

     For more information about the Lenovo XClarity Essentials OneCLI `set` command, see:

     https://pubs.lenovo.com/lxce-onecli/onecli_r_set_command

  Note: If disabling UEFI secure boot is needed, run the following command:
  `OneCli.exe config set SecureBootConfiguration.SecureBootSetting Disabled --bmc` *<userid>*:*<password>*`@`*<ip_address>*

TCM/TPM adapter replacement

Use this procedure to remove or install the TCM/TPM adapter.

Remove the TCM/TPM adapter (for Chinese Mainland only)

Use this information to remove the TCM/TPM adapter.

"**Read** the installation Guidelines" on page 55

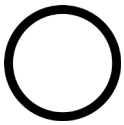
"**Power off** the server for this task" on page 11

"**ATTENTION: Static Sensitive Device** Ground package before opening" on page 57

Before removing the TCM/TPM adapter:

1. Read the safety information and installation guidelines (see "Safety" on page iii and "Installation Guidelines" on page 55).
2. Turn off the server and peripheral devices and disconnect the power cords and all external cables (see "Power off the server" on page 11).
3. If the server is installed in a rack, slide the server out on its rack slide rails to gain access to the top cover, or remove the server from the rack.
4. Remove the top cover (see "Remove the top cover" on page 145).
5. Disconnect the USB 3.0 cable of operator panel tray assembly, and remove it vertically from the system board.

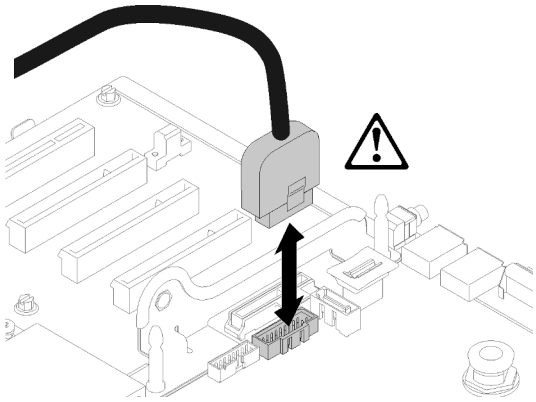

Figure 132. Removing USB 3.0 connector vertically

To remove the TCM/TPM adapter, complete the following steps:

Step 1. Locate the TCM/TPM connector on the system board (see “System-board connectors” on page 25).

Step 2. Press and hold the release latch, and then lift the TCM/TPM adapter straight up.

Notes:

- Carefully handle the TCM/TPM adapter by its edges.
- Your TCM/TPM adapter might look slightly different from the illustration.

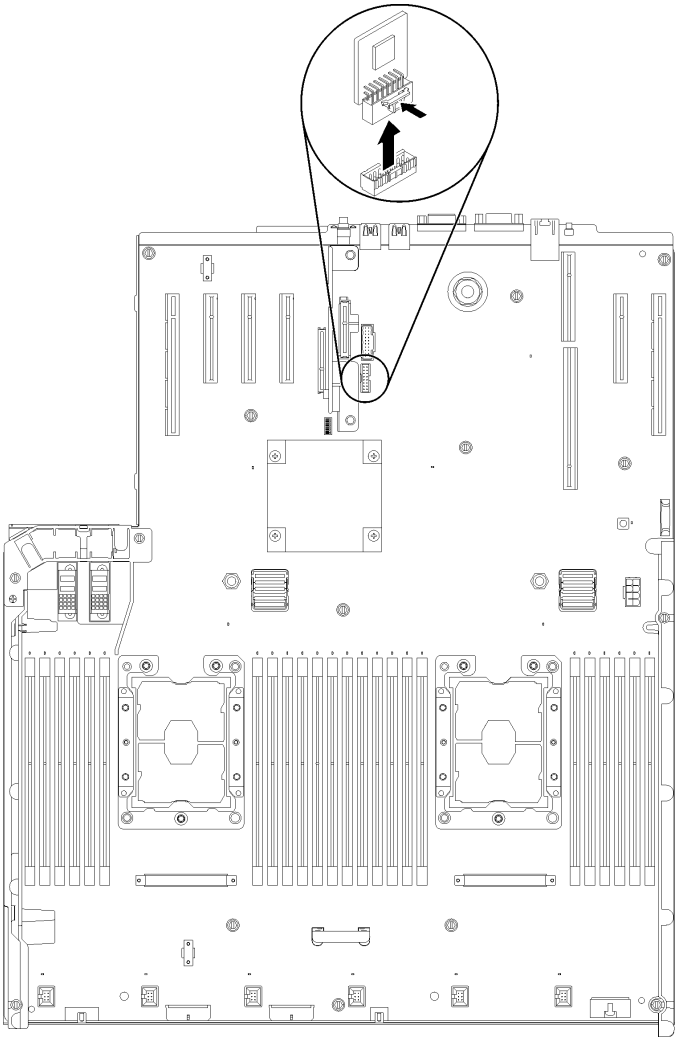

Figure 133. TCM/TPM adapter removal

If you are instructed to return the component or optional device, follow all packaging instructions, and use any packaging materials for shipping that are supplied to you.

Install the TCM/TPM adapter (for Chinese Mainland only)

Use this information to install the TCM/TPM adapter.

"**Read** the installation Guidelines" on page 55

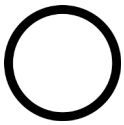

"**Power off** the server for this task" on page 11

"**ATTENTION: Static Sensitive Device** Ground package before opening" on page 57

Before installing the TCM/TPM adapter:

1. Read the safety information and installation guidelines (see “Safety” on page iii and “Installation Guidelines” on page 55).
2. Touch the static-protective package that contains the component to any unpainted metal surface on the server; then, remove it from the package and place it on a static-protective surface.
3. Disconnect the USB 3.0 cable of operator panel tray assembly, and remove it vertically from the system board.

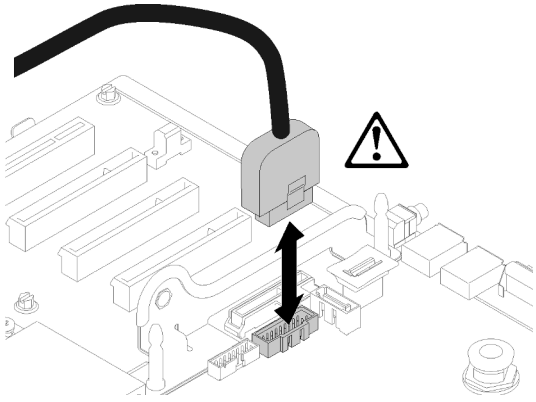

Figure 134. Removing USB 3.0 connector vertically

To install the TCM/TPM adapter, complete the following steps:

Step 1. Locate the TCM/TPM connector on the system board (see “System-board connectors” on page 25).

Step 2. Insert the TCM/TPM adapter into the TCM/TPM connector on the system board.

Notes:

- Carefully handle the TCM/TPM adapter by its edges.
- Your TCM/TPM adapter might look slightly different from the illustration.

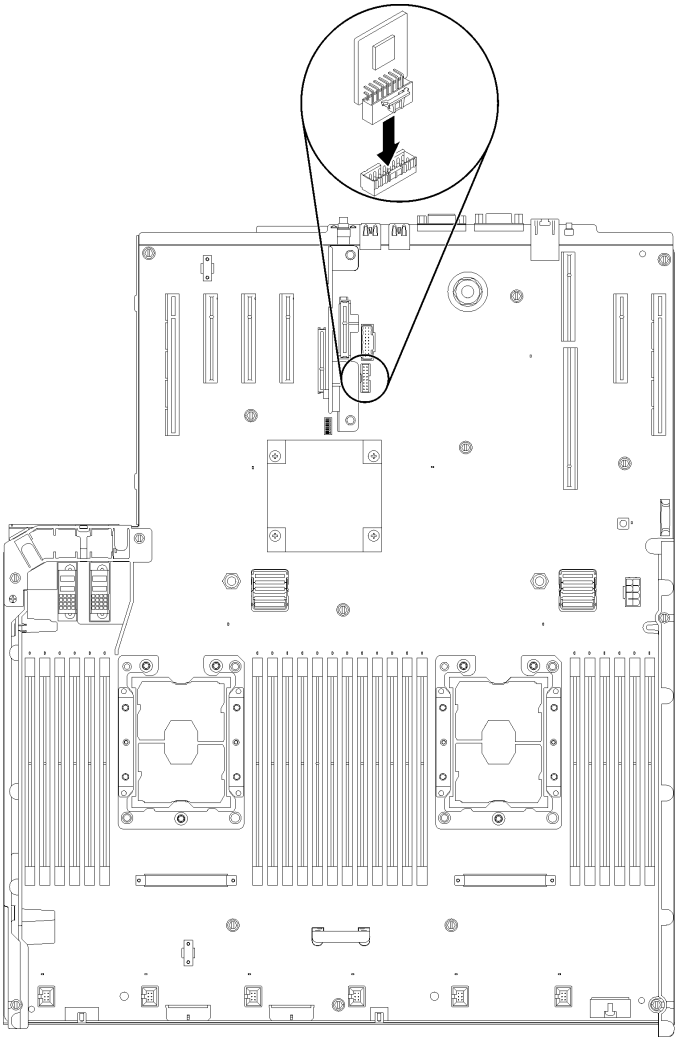

Figure 135. TCM/TPM adapter installation

After installing the TCM/TPM adapter, complete the following steps:

1. Finish installing the system board (see "Install the system board" on page 132).
2. Reinstall the top cover (see "Install the top cover" on page 146).
3. Reconnect the power cords and any cables that you removed.
4. Power on the server and any peripheral devices.

Top cover replacement

Use this procedure to install or remove the top cover.

Remove the top cover

Follow the instructions in this section to remove the top cover.

S014

CAUTION:
Hazardous voltage, current, and energy levels might be present. Only a qualified service technician is authorized to remove the covers where the label is attached.

S033

CAUTION:
Hazardous energy present. Voltages with hazardous energy might cause heating when shorted with metal, which might result in spattered metal, burns, or both.

Before removing the top cover:

1. Read the safety information and installation guidelines (see “Safety” on page iii and “Installation Guidelines” on page 55).
2. Turn off the server and peripheral devices and disconnect the power cords and all external cables (see “Power off the server” on page 11).
3. If the server is installed in a rack, slide the server out on its rack slide rails to gain access to the top cover, or remove the server from the rack.
4. Remove the top cover (see “Remove the top cover” on page 145).

To remove the top cover, complete the following steps:

Step 1. Unlock the cover release latch with a flat-end screwdriver.

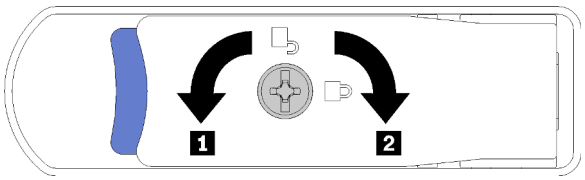

Figure 136. Lock on the top cover latch

Table 46. Lock/unlock directions on the top cover latch

1 Unlock	2 Lock

Step 2. Press and hold on the blue tab of cover release latch; then, rotate the tip of the latch up.

Step 3. Push the latch forward to slide the top cover away from the server.

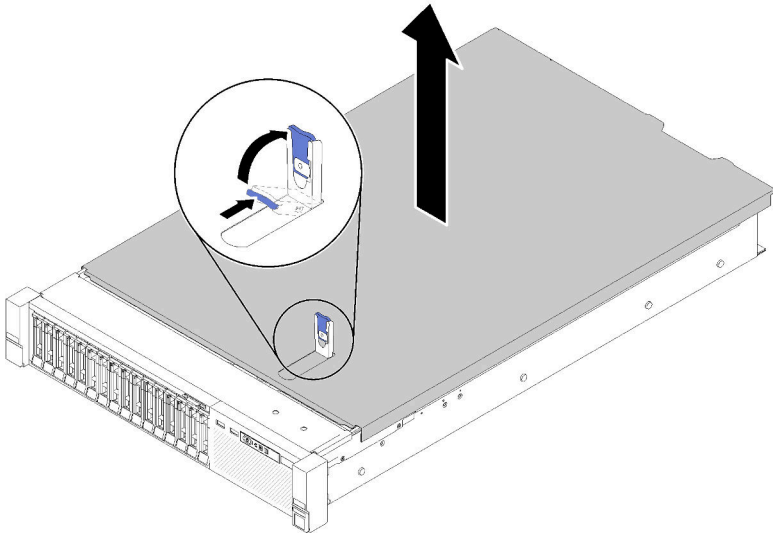

Figure 137. Top cover removal

Step 4. Lift the cover, remove it from the server, and set it aside.

Demo video

Watch the procedure on YouTube

Install the top cover

Use this procedure to install the server top cover.

S014

CAUTION:
Hazardous voltage, current, and energy levels might be present. Only a qualified service technician is authorized to remove the covers where the label is attached.

S033

CAUTION:
Hazardous energy present. Voltages with hazardous energy might cause heating when shorted with metal, which might result in spattered metal, burns, or both.

Before installing the top cover:

1. Read the safety information and installation guidelines (see “Safety” on page iii and “Installation Guidelines” on page 55).

2. Make sure all the removed components are installed, and all the disconnected cables are reconnected.

To install the top cover, complete the following steps:

Step 1. Press and hold on the blue tab of cover release latch; then, rotate the tip of the latch up.
Step 2. Place the top cover on top of the server with both sides aligned.
Step 3. Push the latch down until it clicks in place.

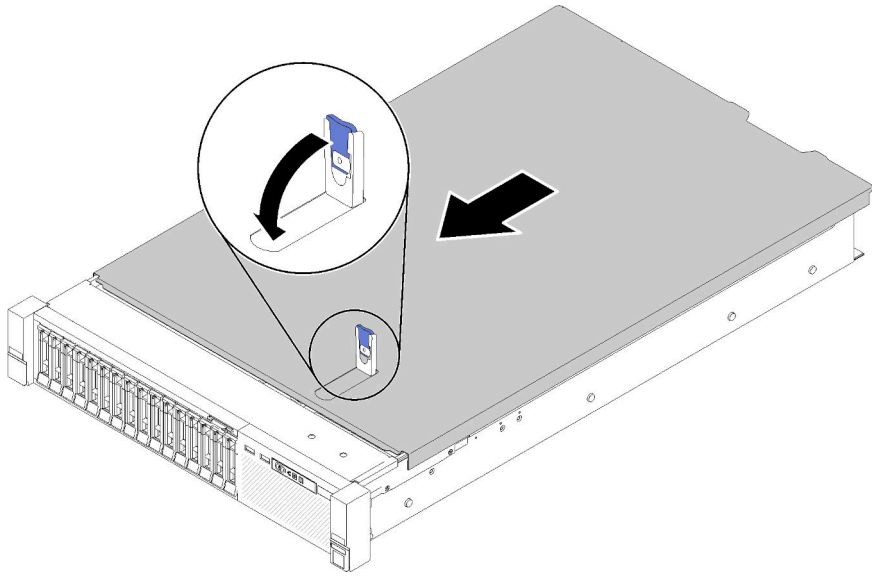

Figure 138. Top cover installation

After installing the top cover, complete the following steps:

1. Reconnect the power cords and any cables that you removed.
2. Install the server in the rack.
3. Power on the server and any peripheral devices.

Demo video

Watch the procedure on YouTube

Complete the parts replacement

Use this information to complete the parts replacement.

To complete the parts replacement, do the following:

1. Ensure that all components have been reassembled correctly and that no tools or loose screws are left inside your server.
2. Properly route and secure the cables in the server. Refer to the cable connecting and routing information for each component.
3. If you have removed the server cover, reinstall it. See “Install the top cover” on page 146.
4. Reconnect external cables and power cords to the server.

   Attention: To avoid component damage, connect the power cords last.

5. Update the server configuration.
   - Download and install the latest device drivers: http://datacentersupport.lenovo.com
   - Update the system firmware. See “Firmware updates” on page 6.
   - Update the UEFI configuration. See https://pubs.lenovo.com/uefi-overview/.
   - Reconfigure the disk arrays if you have installed or removed a hot-swap drive or a RAID adapter. See the Lenovo XClarity Provisioning Manager User Guide, which is available for download at: http://datacentersupport.lenovo.com

Note: Make sure the latest version of ThinkSystem M.2 with Mirroring Enablement Kit Firmware is applied to avoid virtual disk/array missing after system board replacement.

Chapter 4. Problem determination

Use the information in this section to isolate and resolve issues that you might encounter while using your server.

Lenovo servers can be configured to automatically notify Lenovo Support if certain events are generated. You can configure automatic notification, also known as Call Home, from management applications, such as the Lenovo XClarity Administrator. If you configure automatic problem notification, Lenovo Support is automatically alerted whenever a server encounters a potentially significant event.

To isolate a problem, you should typically begin with the event log of the application that is managing the server:

- If you are managing the server from the Lenovo XClarity Administrator, begin with the Lenovo XClarity Administrator event log.
- If you are using some other management application, begin with the Lenovo XClarity Controller event log.

Event logs

An *alert* is a message or other indication that signals an event or an impending event. Alerts are generated by the Lenovo XClarity Controller or by UEFI in the servers. These alerts are stored in the Lenovo XClarity Controller Event Log. If the server is managed by the Chassis Management Module 2 or by the Lenovo XClarity Administrator, alerts are automatically forwarded to those management applications.

Note: For a listing of events, including user actions that might need to be performed to recover from an event, see the *ThinkSystem SR850 Messages and Codes Reference*.

Lenovo XClarity Administrator event log

If you are using Lenovo XClarity Administrator to manage server, network, and storage hardware, you can view the events from all managed devices through the XClarity Administrator.

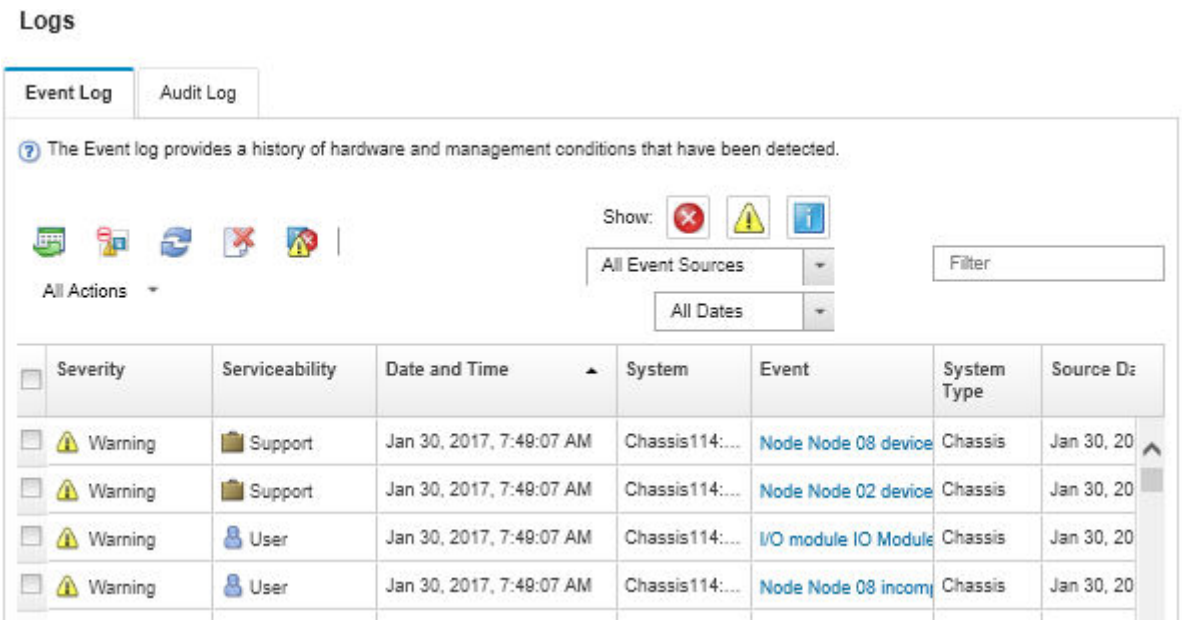

Figure 139. Lenovo XClarity Administrator event log

© Copyright Lenovo 2017, 2023

For more information about working with events from XClarity Administrator, see:

http://sysmgt.lenovofiles.com/help/topic/com.lenovo.lxca.doc/events_vieweventlog.html

Lenovo XClarity Controller event log

The Lenovo XClarity Controller monitors the physical state of the server and its components using sensors that measure internal physical variables such as temperature, power-supply voltages, fan speeds, and component status. The Lenovo XClarity Controller provides various interfaces to systems management software and to system administrators and users to enable remote management and control of a server.

The Lenovo XClarity Controller monitors all components of the server and posts events in the Lenovo XClarity Controller event log.

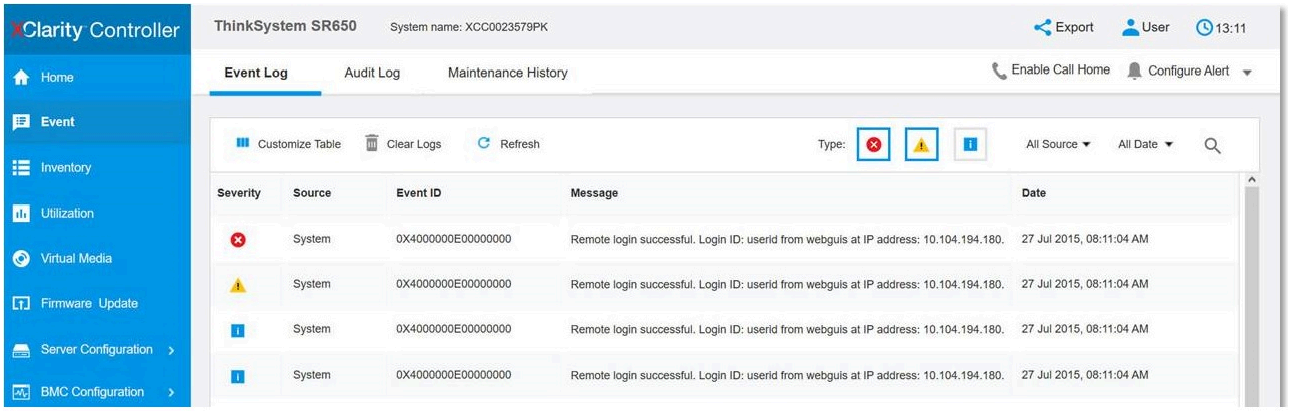

Figure 140. Lenovo XClarity Controller event log

For more information about accessing the Lenovo XClarity Controller event log, see:

“Viewing Event Logs” section in the XCC documentation compatible with your server at https://pubs.lenovo.com/lxcc-overview/

Light path diagnostics

Light path diagnostics is a system of LEDs on various external and internal components of the server that leads you to the failed component. When an error occurs, LEDs are lit on the front operator panel on the front of the server, then on the failed component. By viewing the LEDs in a particular order, you can often identify the source of the error.

The following illustration shows the light path diagnostic LEDs for the server, which are located on the operator information panel.

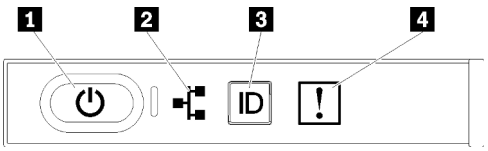

Figure 141. Front operator panel

Table 47. Light path diagnostics: LED status and actions

LED	Description	Action
1 Power button/LED (green)	**Off:** No power supply is properly installed, or the LED itself has failed. **Flashing rapidly (4 times per second):** The server is turned off and is not ready to be turned on. The power-control button is disabled. This will last approximately 5 to 10 seconds. **Flashing slowly (once per second):** The server is turned off and is ready to be turned on. You can press the power-control button to turn on the server. **Lit:** The server is turned on.	Press the power button to turn the server on and off manually.
2 Network activity LED (green) 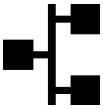	LED on: The server is transmitting to or receiving signals from the Ethernet LAN.	Use this LED to identify network connection status.
3 Identification button/ LED (blue)	This LED is used as a presence detection LED. You can use Lenovo XClarity Controller to light this LED remotely.	Use this LED to locate the server among other servers visually.
4 System error LED (yellow)	LED on: An error has occurred.	1. Look for other error LEDs lit in the system (fans, DIMMs, power supplies, etc). 2. Check the identification LED and check log LED and follow the instructions. 3. Check the Lenovo XClarity Controller event log and the system-error log for information about the error. 4. Save the log if necessary and clear the log afterward.

Power supply LEDs

This topic provides information about vatious power supply LED status and corresponding action suggestions.

The following minimum configuration is required for the ac power LED on the power supply to be lit:

- Power supply
- Power cord
- Appropriate input power from the power source

The following minimum configuration is required for the server to start:

- 16 GB DIMM

- Two processors installed
- At least one 2.5-inch drive installed
- One power supply
- Power cord

The following table describes the problems that are indicated by various combinations of the power-supply LEDs and the power-on LED on the front operator panel and suggested actions to correct the detected problems.

Power supply LEDs			Description	Action	Note
AC	DC	Error			
On	On	Off	Normal operation		The server is functioning correctly.
Off	Off	Off	No ac power to the server, a problem with the ac power source, or a power supply has failed.	1. Check the ac power to the server. 2. Make sure that the power cord is connected to a functioning power source. 3. Restart the server. If the error remains, check the power-supply LEDs. 4. Replace the power-supply.	
Off	Off	On	No input power to the power supply or the power-supply has detected an internal problem.	1. Make sure that the power cord is connected to a functioning power source. 2. Replace the power supply.	This happens only when a second power supply is providing power to the server
Off	On	Off	The power supply has failed.	Replace the power supply.	
On	Blinking	Off	The power supply is in zero output mode (standby). When the total power consumption is low, only one of the power supplies delivers the entire power, while the other is put into this mode.	Zero output advanced mode is on by default, and the standby power supply unit will function normally when power consumption increases. To disable zero output mode, choose **System Settings -> Power -> Zero Output -> Disable**.	
Off	On	On	Faulty power supply.	Replace the power supply.	
On	Off	Off	The system is off: The system is connected to power.		The server is functioning correctly.

			The system is on: Power-supply not fully seated, faultystandard I/O book, or faulty power-supply.	1. Reseat the power supply. 2. Replace the power-supply. 3. Replace the standard I/O book.	It usually indicates the power supply is not fully seated.
On	Off	On	Faulty power supply.	Replace the power supply.	
On	On	On	Faulty power supply.	Replace the power supply.	

System-board LEDs

The following illustrations show the light-emitting diodes (LEDs) on the system board.

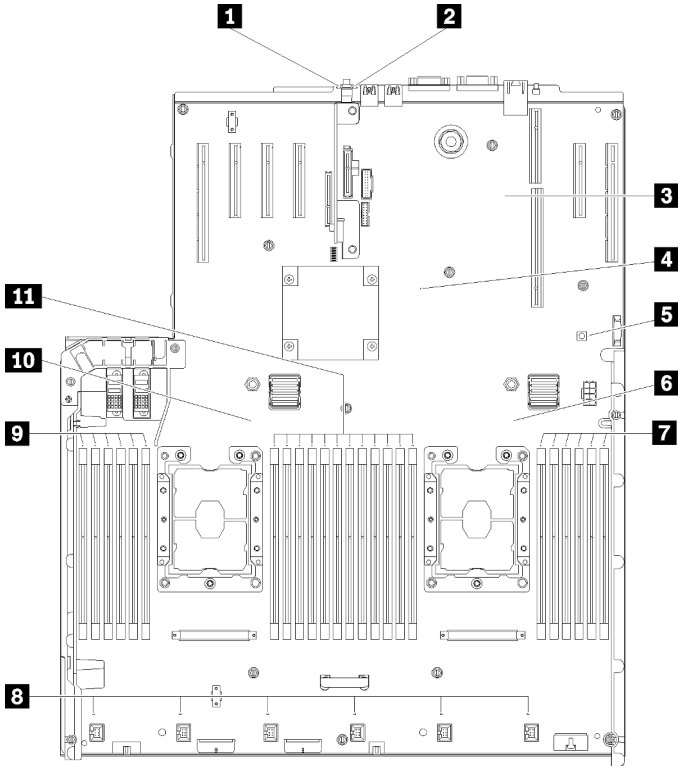

Figure 142. System-board LEDs

Table 48. System board LEDs descriptions and actions

LED	Descriptions and actions
1 System error LED (yellow)	LED on: An error has occurred. Complete the following steps: 1. Check the identification LED and check log LED and follow the instructions. 2. Check the Lenovo XClarity Controller event log and the system error log for information about the error. 3. Save the log if necessary, and clear the log afterward.
2 Identification LED (blue)	This LED is used as a presence detection LED. You can use Lenovo XClarity Controller to light this LED remotely. Use this LED to locate the server among other servers visually.
3 XCC heartbeat LED (green)	This LED indicates XCC heartbeat and boot process: • LED blinking fast: XCC code is in the loading process. • LED going off momentarily: XCC code has loaded completely. • LED going off momentarily and then starts blinking slowing: XCC is fully operational. You can now press the power-control button to power on the server.

Table 48. System board LEDs descriptions and actions (continued)

LED	Descriptions and actions
4 FPGA heartbeat LED (green)	This LED indicates power-on and power-off sequencing. • LED blinking: the system is functioning properly, and no action is necessary. • LED not blinking: (trained technician only) replace the system board (see "System board replacement" on page 130).
5 Light path power LED	This LED indicates if there is sufficient power to lit the LEDs when light path button is pressed while the system is not connected to the power.
6 10 Processor LEDs	LED on: An error has occurred to the processor the LED represents. See "Processor problems" on page 171 for more information.
7 9 11 DIMM error LEDs	LED on: An error has occurred to the DIMM the LED represents. See "Memory problems" on page 161 for more information.
8 Fan LEDs	LED on: An error has occurred to the fan the LED represents. See "Fan problems" on page 159 for more information.

General problem determination procedures

Use the information in this section to resolve problems if the event log does not contain specific errors or the server is inoperative.

If you are not sure about the cause of a problem and the power supplies are working correctly, complete the following steps to attempt to resolve the problem:

1. Power off the server.
2. Make sure that the server is cabled correctly.
3. Remove or disconnect the following devices if applicable, one at a time, until you find the failure. Power on and configure the server each time you remove or disconnect a device.
   - Any external devices.
   - Surge-suppressor device (on the server).
   - Printer, mouse, and non-Lenovo devices.
   - Each adapter.
   - Hard disk drives.
   - Memory modules until you reach the minimum configuration that is supported for the server.

     See "Specifications" on page 1 to determine the minimum configuration for your server.
4. Power on the server.

If the problem is solved when you remove an adapter from the server, but the problem recurs when you install the same adapter again, suspect the adapter. If the problem recurs when you replace the adapter with a different one, try a different PCIe slot.

If the problem appears to be a networking problem and the server passes all system tests, suspect a network cabling problem that is external to the server.

Resolving suspected power problems

Power problems can be difficult to solve. For example, a short circuit can exist anywhere on any of the power distribution buses. Usually, a short circuit will cause the power subsystem to shut down because of an overcurrent condition.

Complete the following steps to diagnose and resolve a suspected power problem.

Step 1. Check the event log and resolve any errors related to the power.

Note: Start with the event log of the application that is managing the server. For more information about event logs, see "Event logs" on page 149

Step 2. Check for short circuits, for example, if a loose screw is causing a short circuit on a circuit board.

Step 3. Remove the adapters and disconnect the cables and power cords to all internal and external devices until the server is at the minimum configuration that is required for the server to start. See "Specifications" on page 1 to determine the minimum configuration for your server.

Step 4. Reconnect all ac power cords and turn on the server. If the server starts successfully, reseat the adapters and devices one at a time until the problem is isolated.

If the server does not start from the minimum configuration, see "Power supply LEDs" on page 151 to replace the components in the minimum configuration one at a time until the problem is isolated.

Resolving suspected Ethernet controller problems

The method that you use to test the Ethernet controller depends on which operating system you are using. See the operating-system documentation for information about Ethernet controllers, and see the Ethernet controller device-driver readme file.

Complete the following steps to attempt to resolve suspected problems with the Ethernet controller.

Step 1. Make sure that the correct device drivers, which come with the server are installed and that they are at the latest level.

Step 2. Make sure that the Ethernet cable is installed correctly.

- The cable must be securely attached at all connections. If the cable is attached but the problem remains, try a different cable.
- If you set the Ethernet controller to operate at 100 Mbps or 1000 Mbps, you must use Category 5 cabling.

Step 3. Determine whether the hub supports auto-negotiation. If it does not, try configuring the integrated Ethernet controller manually to match the speed and duplex mode of the hub.

Step 4. Check the Ethernet controller LEDs on the rear panel of the server. These LEDs indicate whether there is a problem with the connector, cable, or hub.

- The Ethernet link status LED is lit when the Ethernet controller receives a link pulse from the hub. If the LED is off, there might be a defective connector or cable or a problem with the hub.
- The Ethernet transmit/receive activity LED is lit when the Ethernet controller sends or receives data over the Ethernet network. If the Ethernet transmit/receive activity is off, make sure that the hub and network are operating and that the correct device drivers are installed.

Step 5. Check the Network activity LED on the rear of the server. The Network activity LED is lit when data is active on the Ethernet network. If the Network activity LED is off, make sure that the hub and network are operating and that the correct device drivers are installed.

Step 6. Check for operating-system-specific causes of the problem, and also make sure that the operating system drivers are installed correctly.

Step 7. Make sure that the device drivers on the client and server are using the same protocol.

If the Ethernet controller still cannot connect to the network but the hardware appears to be working, the network administrator must investigate other possible causes of the error.

Troubleshooting by symptom

Use this information to find solutions to problems that have identifiable symptoms.

To use the symptom-based troubleshooting information in this section, complete the following steps:

1. Check the event log of the application that is managing the server and follow the suggested actions to resolve any event codes.
   - If you are managing the server from the Lenovo XClarity Administrator, begin with the Lenovo XClarity Administrator event log.
   - If you are managing the server from the Chassis Management Module 2, begin with the Chassis Management Module 2 event log.
   - If you are using some other management application, begin with the Lenovo XClarity Controller event log.

   For more information about event logs, see “Event logs” on page 149)
2. Review this section to find the symptoms that you are experiencing and follow the suggested actions to resolve the issue.
3. If the problem persists, contact support (see “Contacting Support” on page 179).

Hard disk drive problems

Use this information to resolve issues related to the hard disk drives.

- “Server cannot recognize a hard drive” on page 157
- “Multiple hard drives fail” on page 158
- “Multiple hard drives are offline” on page 158
- “A replacement hard disk drive does not rebuild” on page 158
- “Green hard disk drive activity LED does not represent actual state of associated drive” on page 159
- “Yellow hard disk drive status LED does not represent actual state of associated drive” on page 159

Server cannot recognize a hard drive

Complete the following steps until the problem is solved.

1. Observe the associated yellow hard disk drive status LED. If the LED is lit, it indicates a drive fault.
2. If the status LED is lit, remove the drive from the bay, wait 45 seconds, and reinsert the drive, making sure that the drive assembly connects to the hard disk drive backplane.
3. Observe the associated green hard disk drive activity LED and the yellow status LED and perform corresponding operations in different situations:
   - If the green activity LED is flashing and the yellow status LED is not lit, the drive is recognized by the controller and is working correctly. Run the diagnostics tests for the hard disk drives. When you start a server and press the key according to the on-screen instructions, the LXPM is displayed by default. (For more information, see the “Startup” section in the LXPM documentation compatible with your server at https://pubs.lenovo.com/lxpm-overview/.)You can perform hard drive diagnostics from this interface. From the Diagnostic page, click **Run Diagnostic → HDD test/Disk Drive Test**.*
   - If the green activity LED is flashing and the yellow status LED is flashing slowly, the drive is recognized by the controller and is rebuilding.
   - If neither LED is lit or flashing, check whether the hard disk drive backplane is correctly seated. For details, go to step 4.

- If the green activity LED is flashing and the yellow status LED is lit, replace the drive. If the activity of the LEDs remains the same, go to step Hard disk drive problems. If the activity of the LEDs changes, return to step 1.

4. Make sure that the hard disk drive backplane is correctly seated. When it is correctly seated, the drive assemblies correctly connect to the backplane without bowing or causing movement of the backplane.
5. Reseat the backplane power cable and repeat steps 1 through 3.
6. Reseat the backplane signal cable and repeat steps 1 through 3.
7. Suspect the backplane signal cable or the backplane:
   - Replace the affected backplane signal cable.
   - Replace the affected backplane.
8. Run the diagnostics tests for the hard disk drives. When you start a server and press the key according to the on-screen instructions, the LXPM is displayed by default. (For more information, see the "Startup" section in the LXPM documentation compatible with your server at https://pubs.lenovo.com/lxpm-overview/.) You can perform hard drive diagnostics from this interface. From the Diagnostic page, click **Run Diagnostic → HDD test/Disk Drive Test**.*

   Based on those tests:
   - If the backplane passes the test but the drives are not recognized, replace the backplane signal cable and run the tests again.
   - Replace the backplane.
   - If the adapter fails the test, disconnect the backplane signal cable from the adapter and run the tests again.
   - If the adapter fails the test, replace the adapter.

Multiple hard drives fail

Complete the following steps until the problem is solved:

- View the Lenovo XClarity Controller event log for events related to power supplies or vibration issues and resolve those events.
- Make sure that the device drivers and firmware for the hard disk drive and server are at the latest level

Important: Some cluster solutions require specific code levels or coordinated code updates. If the device is part of a cluster solution, verify that the latest level of code is supported for the cluster solution before you update the code.

Multiple hard drives are offline

Complete the following steps until the problem is solved:

- View the Lenovo XClarity Controller event log for events related to power supplies or vibration issues and resolve those events.
- View the storage subsystem log for events related to the storage subsystem and resolve those events.

A replacement hard disk drive does not rebuild

Complete the following steps until the problem is solved:

1. Make sure that the hard disk drive is recognized by the adapter (the green hard disk drive activity LED is flashing).
2. Review the SAS/SATA RAID adapter documentation to determine the correct configuration parameters and settings.

Green hard disk drive activity LED does not represent actual state of associated drive

Complete the following steps until the problem is solved:

1. If the green hard disk drive activity LED does not flash when the drive is in use, run the diagnostics tests for the hard disk drives. When you start a server and press the key according to the on-screen instructions, the LXPM is displayed by default. (For more information, see the “Startup” section in the LXPM documentation compatible with your server at https://pubs.lenovo.com/lxpm-overview/.) You can perform hard drive diagnostics from this interface. From the Diagnostic page, click **Run Diagnostic → HDD test/Disk Drive Test**.*
2. If the drive passes the test, replace the backplane.
3. If the drive fails the test, replace the drive.

Yellow hard disk drive status LED does not represent actual state of associated drive

Complete the following steps until the problem is solved:

1. Turn off the server.
2. Reseat the SAS/SATA adapter.
3. Reseat the backplane signal cable and backplane power cable.
4. Reseat the hard disk drive.
5. Power on the server and observe the activity of the hard disk drive LEDs.

Note: *Depending on the LXPM version, you may see **HDD test** or **Disk Drive Test**.

Fan problems

Use this information to resolve issues related the to fans.

- “Abnormally high RPM (revolutions per minute)” on page 159

Abnormally high RPM (revolutions per minute)

Complete the following steps until the problem is solved.

1. 1. Check to see if the system inlet perforation or heatsinks are clogged.
2. 2. Make sure that all air baffles are correctly installed in the server.
3. 3. Check the thermal grease on the processor, and make sure it's not contaminated.

Intermittent problems

Use this information to solve intermittent problems.

- “Intermittent external device problems” on page 159
- “Intermittent KVM problems” on page 160
- “Intermittent unexpected reboots” on page 160

Intermittent external device problems

Complete the following steps until the problem is solved.

1. Update the UEFI and XCC firmware to the latest versions.
2. Make sure that the correct device drivers are installed. See the manufacturer's website for documentation.
3. For a USB device:
   a. Make sure that the device is configured correctly.

Restart the server and press the key according to the on-screen instructions to display the LXPM system setup interface. (For more information, see the “Startup” section in the LXPM documentation compatible with your server at https://pubs.lenovo.com/lxpm-overview/.) Then, click **System Settings → Devices and I/O Ports → USB Configuration**.

b. Connect the device to another port. If using a USB hub, remove the hub and connect the device directly to the server. Make sure that the device is configured correctly for the port.

Intermittent KVM problems

Complete the following steps until the problem is solved.

Video problems:

1. Make sure that all cables and the console breakout cable are properly connected and secure.
2. Make sure that the monitor is working properly by testing it on another server.
3. Test the console breakout cable on a working server to ensure that it is operating properly. Replace the console breakout cable if it is defective.

Keyboard problems:

Make sure that all cables and the console breakout cable are properly connected and secure.

Mouse problems:

Make sure that all cables and the console breakout cable are properly connected and secure.

Intermittent unexpected reboots

Note: Some uncorrectable errors require that the server reboot so that it can disable a device, such as a memory DIMM or a processor to allow the machine to boot up properly.

1. If the reset occurs during POST and the POST watchdog timer is enabled, make sure that sufficient time is allowed in the watchdog timeout value (POST Watchdog Timer).

   To check the POST watchdog time, restart the server and press the key according to the on-screen instructions to display the LXPM system setup interface. (For more information, see the “Startup” section in the LXPM documentation compatible with your server at https://pubs.lenovo.com/lxpm-overview/.) Then, click **BMC Settings → POST Watchdog Timer**.

2. If the reset occurs after the operating system starts, do one of the followings:
   - Enter the operating system when the system operates normally and set up operating system kernel dump process (Windows and Linux base operating systems will be using different method). Enter the UEFI setup menus and disable the feature, or disable it with the following OneCli command.
     `OneCli.exe config set SystemRecovery.RebootSystemOnNMI Disable --bmc XCC_USER:XCC_PASSWORD@XCC_IPAddress`
   - Disable any automatic server restart (ASR) utilities, such as the Automatic Server Restart IPMI Application for Windows, or any ASR devices that are installed.
3. See the management controller event log to check for an event code that indicates a reboot. See “Event logs” on page 149 for information about viewing the event log. If you are using Linux base operating system, then capture all logs back to Lenovo support for further investigation.

Keyboard, mouse, KVM switch or USB-device problems

Use this information to solve problems related to a keyboard, mouse, KVM switch or USB-device problems.

- “All or some keys on the keyboard do not work” on page 161
- “Mouse does not work” on page 161

- “KVM switch problems” on page 161
- “USB-device does not work” on page 161

All or some keys on the keyboard do not work

1. Make sure that:
   - The keyboard cable is securely connected.
   - The server and the monitor are turned on.
2. If you are using a USB keyboard, run the Setup utility and enable keyboardless operation.
3. If you are using a USB keyboard and it is connected to a USB hub, disconnect the keyboard from the hub and connect it directly to the server.
4. Replace the keyboard.

Mouse does not work

1. Make sure that:
   - The mouse cable is securely connected to the server.
   - The mouse device drivers are installed correctly.
   - The server and the monitor are turned on.
   - The mouse option is enabled in the Setup utility.
2. If you are using a USB mouse and it is connected to a USB hub, disconnect the mouse from the hub and connect it directly to the server.
3. Replace the mouse.

KVM switch problems

1. Make sure that the KVM switch is supported by your server.
2. Make sure that the KVM switch is powered on correctly.
3. If the keyboard, mouse or monitor can be operated normally with direct connection to the server, then replace the KVM switch.

USB-device does not work

1. Make sure that:
   - The correct USB device driver is installed.
   - The operating system supports USB devices.
2. Make sure that the USB configuration options are set correctly in system setup.

   Restart the server and press the key according to the on-screen instructions to display the LXPM system setup interface. (For more information, see the “Startup” section in the LXPM documentation compatible with your server at https://pubs.lenovo.com/lxpm-overview/.) Then, click **System Settings → Devices and I/O Ports → USB Configuration**.
3. If you are using a USB hub, disconnect the USB device from the hub and connect it directly to the server.

Memory problems

Use this information to resolve issues related to memory.

- “Displayed system memory is less than installed physical memory” on page 162
- “Multiple memory modules in a channel identified as failing” on page 163
- “Attempt to change to another DCPMM mode fails” on page 163

- “Extra namespace appears in an interleaved region” on page 163

Displayed system memory is less than installed physical memory

Complete the following steps until the problem is solved:

Note: Each time you install or remove a memory module, you must disconnect the server from the power source; then, wait 10 seconds before restarting the server.

1. Make sure that:
   - No error LEDs are lit on the operator information panel.
   - No memory module error LEDs are lit on the system board.
   - Memory mirrored channel does not account for the discrepancy.
   - The memory modules are seated correctly.
   - You have installed the correct type of memory module (see “Specifications” on page 1 or “Intel Optane DC Persistent Memory (DCPMM) setup” in *Setup Guide* for requirements).
   - After changing or replacing a memory module, memory configuration is updated accordingly in the Setup Utility.
   - All banks of memory are enabled. The server might have automatically disabled a memory bank when it detected a problem, or a memory bank might have been manually disabled.
   - There is no memory mismatch when the server is at the minimum memory configuration.
   - When DCPMMs are installed:
     a. If the memory is set in App Direct or Mixed Memory Mode, all the saved data have been backed up, and created namespaces are deleted before any DCPMM is replaced.
     b. Refer to “Intel Optane DC Persistent Memory (DCPMM) setup” in *Setup Guide* and see if the displayed memory fits the mode description.
     c. If DCPMMs are recently set in Memory Mode, turn it back to App Direct Mode and examine if there is namespace that has not been deleted (see “Intel Optane DC Persistent Memory (DCPMM) setup” in *Setup Guide*).
     d. Go to the Setup Utility, select **System Configuration and Boot Management → Intel Optane DCPMMs → Security**, and make sure all the DCPMM units are unlocked.
2. Reseat the memory modules, and then restart the server.
3. Check the POST error log:
   - If a memory module was disabled by a systems-management interrupt (SMI), replace the memory module.
   - If a memory module was disabled by the user or by POST, reseat the memory module; then, run the Setup utility and enable the memory module.
4. Run memory diagnostics. When you start a solution and press the key according to the on-screen instructions, the LXPM interface is displayed by default. (For more information, see the “Startup” section in the LXPM documentation compatible with your server at https://pubs.lenovo.com/lxpm-overview/.) You can perform memory diagnostics with this interface. From the Diagnostic page, go to **Run Diagnostic → Memory test** or **DCPMM test**.

   Notes: When DCPMMs are installed, run diagnostics based on the mode that is set presently:

   - App Direct Mode:
     – Run Memory Test for DRAM memory modules.
     – Run DCPMM Test for DCPMMs.
   - Memory and Mixed Memory Mode:

Run both Memory Test and DCPMM Test for DCPMMs.

5. Reverse the modules between the channels (of the same processor), and then restart the server. If the problem is related to a memory module, replace the failing memory module.

   Note: When DCPMMs are installed, only adopt this method in Memory Mode.
6. Re-enable all memory modules using the Setup utility, and then restart the server.
7. (Trained technician only) Install the failing memory module into a memory module connector for processor 2 (if installed) to verify that the problem is not the processor or the memory module connector.
8. (Trained technician only) Replace the system board.

Multiple memory modules in a channel identified as failing

Note: Each time you install or remove a memory module, you must disconnect the server from the power source; then, wait 10 seconds before restarting the server.

1. Reseat the memory modules; then, restart the server.
2. Remove the highest-numbered memory module of those that are identified and replace it with an identical known good memory module; then, restart the server. Repeat as necessary. If the failures continue after all identified memory modules are replaced, go to step 4.
3. Return the removed memory modules, one at a time, to their original connectors, restarting the server after each memory module, until a memory module fails. Replace each failing memory module with an identical known good memory module, restarting the server after each memory module replacement. Repeat step 3 until you have tested all removed memory modules.
4. Replace the highest-numbered memory module of those identified; then, restart the server. Repeat as necessary.
5. Reverse the memory modules between the channels (of the same processor), and then restart the server. If the problem is related to a memory module, replace the failing memory module.
6. (Trained technician only) Install the failing memory module into a memory module connector for processor 2 (if installed) to verify that the problem is not the processor or the memory module connector.
7. (Trained technician only) Replace the system board.

Attempt to change to another DCPMM mode fails

After the DCPMM mode is changed and the system is successfully restarted, if the DCPMM mode stays the same instead of being changed, check the DRAM DIMMs and DCPMM capacity to see if it meets the requirement of the new mode (see “Intel Optane DC Persistent Memory (DCPMM) setup” in *Setup Guide*).

Extra namespace appears in an interleaved region

If there are two created namespaces in one interleaved region, VMware ESXi ignores the created namespaces and creates an extra new namespace during system booting. Delete the created namespaces in either the Setup Utility or the operating system before the first booting with ESXi.

Monitor and video problems

Use this information to solve problems related to a monitor or video.

- “Incorrect characters are displayed” on page 164
- “Screen is blank” on page 164
- “Screen goes blank when you start some application programs” on page 164
- “The monitor has screen jitter, or the screen image is wavy, unreadable, rolling, or distorted.” on page 164
- “The wrong characters appear on the screen” on page 165
- “Management controller remote presence cannot work” on page 165

Incorrect characters are displayed

Complete the following steps:

1. Verify that the language and locality settings are correct for the keyboard and operating system.
2. If the wrong language is displayed, update the server firmware to the latest level. See “Firmware updates” on page 6.

Screen is blank

1. If the server is attached to a KVM switch, bypass the KVM switch to eliminate it as a possible cause of the problem: connect the monitor cable directly to the correct connector on the rear of the server.
2. If the server installed with the graphical adapters while turning on the server, the Lenovo logo displays on the screen after approximately 3 minutes. This is normal operation while the system loads.
3. Make sure that:
   - The server is turned on and there is power supplied to the server.
   - The monitor cables are connected correctly.
   - The monitor is turned on and the brightness and contrast controls are adjusted correctly.
4. Make sure that the correct server is controlling the monitor, if applicable.
5. Make sure that the video output is not affected by corrupted server firmware; see “Firmware updates” on page 6.
6. If the problem remains, contact Lenovo Support.

Screen goes blank when you start some application programs

1. Make sure that:
   - The application program is not setting a display mode that is higher than the capability of the monitor.
   - You installed the necessary device drivers for the application.

The monitor has screen jitter, or the screen image is wavy, unreadable, rolling, or distorted.

1. If the monitor self-tests show that the monitor is working correctly, consider the location of the monitor. Magnetic fields around other devices (such as transformers, appliances, fluorescents, and other monitors) can cause screen jitter or wavy, unreadable, rolling, or distorted screen images. If this happens, turn off the monitor.

   Attention: Moving a color monitor while it is turned on might cause screen discoloration.

   Move the device and the monitor at least 305 mm (12 in.) apart, and turn on the monitor.

   Notes:

   a. To prevent diskette drive read/write errors, make sure that the distance between the monitor and any external diskette drive is at least 76 mm (3 in.).

   b. Non-Lenovo monitor cables might cause unpredictable problems.
2. Reseat the monitor cable.
3. Replace the components listed in step 2 one at a time, in the order shown, restarting the server each time:
   a. Monitor cable
   b. Video adapter (if one is installed)
   c. Monitor
   d. (Trained technician only) System board.

The wrong characters appear on the screen

Complete the following steps until the problem is solved:

1. Verify that the language and locality settings are correct for the keyboard and operating system.
2. If the wrong language is displayed, update the server firmware to the latest level. See “Firmware updates” on page 6.

Management controller remote presence cannot work

The management controller remote presence function is unable to display the system screen when an optional video adapter is present. To use the management controller remote presence function, remove the optional video adapter or use the onboard VGA as the display device.

Network problems

Use this information to resolve issues related to networking.

- “Could not log in using LDAP account with SSL enabled” on page 165

Could not log in using LDAP account with SSL enabled

Complete the following steps until the problem is resolved:

1. Make sure that the license key is valid.
2. Generate a new license key and log in again.

Observable problems

Use this information to solve observable problems.

- “Server hangs during the UEFI boot process” on page 165
- “The server immediately displays the POST Event Viewer when it is turned on” on page 166
- “Server is unresponsive (POST is complete and operating system is running)” on page 166
- “Server is unresponsive (POST failed and cannot start System Setup)” on page 166
- “Voltage planar fault is displayed in the event log” on page 167
- “Unusual smell” on page 167
- “Server seems to be running hot” on page 167
- “Cannot enter legacy mode after installing a new adapter” on page 167
- “Cracked parts or cracked chassis” on page 167

Server hangs during the UEFI boot process

If the system hangs during the UEFI boot process with the message `UEFI: DXE INIT` on the display, make sure that Option ROMs were not configured with a setting of **Legacy**. You can remotely view the current settings for Option ROMs by running the following command using the Lenovo XClarity Essentials OneCLI:

```
onecli config show EnableDisableAdapterOptionROMSupport --bmc xcc_userid:xcc_password@xcc_ipaddress
```

To recover a system that hangs during the boot process with Legacy Option ROM settings, see the following Tech Tip:

https://datacentersupport.lenovo.com/us/en/solutions/ht506118

If legacy Option ROMs must be used, do not set slot Option ROMs to **Legacy** on the Devices and I/O Ports menu. Instead, set slot Option ROMs to **Auto** (the default setting), and set the System Boot Mode to **Legacy Mode**. Legacy option ROMs will be invoked shortly before the system boots.

The server immediately displays the POST Event Viewer when it is turned on

Complete the following steps until the problem is solved.

1. Correct any errors that are indicated by the light path diagnostics LEDs.
2. Make sure that the server supports all the processors and that the processors match in speed and cache size.

   You can view processor details from system setup.

   To determine if the processor is supported for the server, see https://serverproven.lenovo.com/.
3. (Trained technician only) Make sure that processor 1 is seated correctly
4. (Trained technician only) Remove processor 2 and restart the server.
5. Replace the following components one at a time, in the order shown, restarting the server each time:
   a. (Trained technician only) Processor
   b. (Trained technician only) System board

Server is unresponsive (POST is complete and operating system is running)

Complete the following steps until the problem is solved.

- If you are in the same location as the server, complete the following steps:
  1. If you are using a KVM connection, make sure that the connection is operating correctly. Otherwise, make sure that the keyboard and mouse are operating correctly.
  2. If possible, log in to the server and verify that all applications are running (no applications are hung).
  3. Restart the server.
  4. If the problem remains, make sure that any new software has been installed and configured correctly.
  5. Contact your place of purchase of the software or your software provider.
- If you are accessing the server from a remote location, complete the following steps:
  1. Make sure that all applications are running (no applications are hung).
  2. Attempt to log out of the system and log back in.
  3. Validate the network access by pinging or running a trace route to the server from a command line.
     a. If you are unable to get a response during a ping test, attempt to ping another server in the enclosure to determine whether it is a connection problem or server problem.
     b. Run a trace route to determine where the connection breaks down. Attempt to resolve a connection issue with either the VPN or the point at which the connection breaks down.
  4. Restart the server remotely through the management interface.
  5. If the problem remains, verify that any new software has been installed and configured correctly.
  6. Contact your place of purchase of the software or your software provider.

Server is unresponsive (POST failed and cannot start System Setup)

Configuration changes, such as added devices or adapter firmware updates, and firmware or application code problems can cause the server to fail POST (the power-on self-test).

If this occurs, the server responds in either of the following ways:

- The server restarts automatically and attempts POST again.

- The server hangs, and you must manually restart the server for the server to attempt POST again.

After a specified number of consecutive attempts (automatic or manual), the server reverts to the default UEFI configuration and starts System Setup so that you can make the necessary corrections to the configuration and restart the server. If the server is unable to successfully complete POST with the default configuration, there might be a problem with the system board.

You can specify the number of consecutive restart attempts in System Setup. Restart the server and press the key according to the on-screen instructions to display the LXPM system setup interface. (For more information, see the "Startup" section in the LXPM documentation compatible with your server at https://pubs.lenovo.com/lxpm-overview/.) Then, click **System Settings → Recovery and RAS → POST Attempts → POST Attempts Limit**. Available options are 3, 6, 9, and disable.

Voltage planar fault is displayed in the event log

Complete the following steps until the problem is solved.

1. Revert the system to the minimum configuration. See "Specifications" on page 1 for the minimally required number of processors and DIMMs.
2. Restart the system.
   - If the system restarts, add each of the items that you removed one at a time, restarting the system each time, until the error occurs. Replace the item for which the error occurs.
   - If the system does not restart, suspect the system board.

Unusual smell

Complete the following steps until the problem is solved.

1. An unusual smell might be coming from newly installed equipment.
2. If the problem remains, contact Lenovo Support.

Server seems to be running hot

Complete the following steps until the problem is solved.

Multiple servers or chassis:

1. Make sure that the room temperature is within the specified range (see "Specifications" on page 1).
2. Check the management processor event log for rising temperature events. If there are no events, the server is running within normal operating temperatures. Note that you can expect some variation in temperature.

Cannot enter legacy mode after installing a new adapter

Complete the following procedure to solve the problem.

1. Go to **UEFI Setup → Devices and I/O Ports → Set Option ROM Execution Order**.
2. Move the RAID adapter with operation system installed to the top of the list.
3. Select **Save**.
4. Reboot the system and auto boot to operation system.

Cracked parts or cracked chassis

Contact Lenovo Support.

Optional-device problems

Use this information to solve problems related to optional devices.

- “External USB device is not recognized” on page 168
- “PCIe adapter is not recognized or is not functioning” on page 168
- “Insufficient PCIe resources are detected.” on page 168
- “A Lenovo optional device that was just installed does not work.” on page 169
- “A Lenovo optional device that worked previously does not work now” on page 169

External USB device is not recognized

Complete the following steps until the problem is resolved:

1. Update the UEFI firmware to the latest version.
2. Make sure that the proper drivers are installed on the compute node. See the product documentation for the USB device for information about device drivers.
3. Use the Setup utility to make sure that the device is configured correctly.
4. If the USB device is plugged into a hub or the console breakout cable, unplug the device and plug it directly into the USB port on the front of the compute node.

PCIe adapter is not recognized or is not functioning

Complete the following steps until the problem is resolved:

1. Update the UEFI firmware to the latest version.
2. Check the event log and resolve any issues related to the device.
3. Validate that the device is supported for the server (see https://serverproven.lenovo.com/). Make sure that the firmware level on the device is at the latest supported level and update the firmware if applicable.
4. Make sure that the adapter is installed in a correct slot.
5. Make sure that the proper device drivers are installed for the device.
6. Resolve any resource conflicts if running legacy mode (UEFI). Check legacy ROM boot orders and modify the UEFI setting for MM config base.

   Note: Ensure that you modify the ROM boot order associated with the PCIe adapter to the first execution order.
7. Check http://datacentersupport.lenovo.com for any tech tips (also known as retain tips or service bulletins) that might be related to the adapter.
8. Ensure any adapter external connections are correct and that the connectors are not physically damaged.
9. Make sure that the PCIe adapter is installed with the supported operating system.

Insufficient PCIe resources are detected.

If you see an error message stating “Insufficient PCI Resources Detected,” complete the following steps until the problem is resolved:

1. Press Enter to access System Setup Utility.
2. Select **System Settings → Devices and I/O Ports → MM Config Base**; then, modify the setting to increase the device resources. For example, modify 3 GB to 2 GB or modify 2 GB to 1 GB.
3. Save the settings and restart the system.
4. If the error recurs with the highest device resource setting (1GB), shutdown the system and remove some PCIe devices; then, power on the system.
5. If the reboot failed, repeat step 1 to step 4.
6. If the error recurs, press Enter to access System Setup Utility.

7. Select **System Settings → Devices and I/O Ports → PCI 64–Bit Resource Allocation**, then; modify the setting from **Auto** to **Enable**.
8. If the Boot Device does not support MMIO above 4GB for Legacy Boot, use UEFI Boot Mode or remove/disable some PCIe devices.
9. DC cycle the system and ensure the system is enter UEFI boot menu or the operating system; then, capture the FFDC log.
10. Contact Lenovo technical support.

A Lenovo optional device that was just installed does not work.

1. Make sure that:
   - The device is supported for the server (see https://serverproven.lenovo.com/).
   - You followed the installation instructions that came with the device and the device is installed correctly.
   - You have not loosened any other installed devices or cables.
   - You updated the configuration information in system setup. When you start a server and press the key according to the on-screen instructions to display the Setup Utility. (For more information, see the "Startup" section in the LXPM documentation compatible with your server at https://pubs.lenovo.com/lxpm-overview/.) Whenever memory or any other device is changed, you must update the configuration.
2. Reseat the device that you have just installed.
3. Replace the device that you have just installed.
4. Reseat the cable connection and check there is no physical damage to the cable.
5. If there is any cable damages, then replace the cable.

A Lenovo optional device that worked previously does not work now

1. Make sure that all of the cable connections for the device are secure.
2. If the device comes with test instructions, use those instructions to test the device.
3. Reseat the cable connection and check if any physical parts have been damaged, .
4. Replace the cable.
5. Reseat the failing device.
6. Replace the failing device.

Power on and power off problems

Use this information to resolve issues when powering on or powering off the server.

- "Embedded hypervisor is not in the boot list" on page 169
- "Server does not power on" on page 170
- "Server does not power off" on page 170
- "Unexpected shutdown with LED not lit" on page 171
- "Unexpected shutdown with LED not lit" on page 171

Embedded hypervisor is not in the boot list

Complete the following steps until the problem is resolved:

1. Make sure that the optional embedded hypervisor flash device is selected on the boot manager `<F12> Select Boot Device` at startup.
2. Make sure that the embedded hypervisor flash device is seated in the connector correctly.

3. See the documentation that comes with the optional embedded hypervisor flash device to validate that the device is configured correctly.
4. Make sure that other software works on the server.

Server does not power on

Complete the following steps until the problem is resolved:

Note: The power-control button will not function until approximately 5 to 10 seconds after the server has been connected to power.

1. Make sure that the power-control button is working correctly:
   a. Disconnect the server power cords.
   b. Reconnect the power cords.
   c. (Trained technician only) Reseat the operator information panel cable, and then repeat steps 1a and 1b.
      - (Trained technician only) If the server starts, reseat the operator information panel. If the problem remains, replace the operator information panel.
      - If the server does not start, bypass the power-control button by using the force power-on jumper. If the server starts, reseat the operator information panel. If the problem remains, replace the operator information panel.
2. Make sure that the reset button is working correctly:
   a. Disconnect the server power cords.
   b. Reconnect the power cords.
   c. (Trained technician only) Reseat the operator information panel cable, and then repeat steps 2a and 2b.
      - (Trained technician only) If the server starts, replace the operator information panel.
      - If the server does not start, go to step 3.
3. Make sure that both power supplies installed in the server are of the same type. Mixing different power supplies in the server will cause a system error (the system-error LED on the front panel turns on).
4. Make sure that:
   - The power cords are correctly connected to the server and to a working electrical outlet.
   - The type of memory that is installed is correct.
   - The DIMMs are fully seated.
   - The LEDs on the power supply do not indicate a problem.
   - The processors are installed in the correct sequence.
5. Reseat the following components:
   a. Operator information panel connector
   b. Power supplies
6. Replace the following components. restarting the server each time:
   a. Operator information panel connector
   b. Power supplies
7. If you just installed an optional device, remove it, and restart the server. If the server now starts, you might have installed more devices than the power supply supports.
8. See “Power supply LEDs” on page 151.

Server does not power off

Complete the following steps until the problem is resolved:

1. Determine whether you are using an Advanced Configuration and Power Interface (ACPI) or a non-ACPI operating system. If you are using a non-ACPI operating system, complete the following steps:
   a. Press `Ctrl+Alt+Delete`.
   b. Turn off the server by pressing the power-control button and holding it down for 5 seconds.
   c. Restart the server.
   d. If the server fails POST and the power-control button does not work, disconnect the power cord for 20 seconds; then, reconnect the power cord and restart the server.
2. If the problem remains or if you are using an ACPI-aware operating system, suspect the system board.

Unexpected shutdown with LED not lit

Complete the following steps until the problem is resolved:

1. Check the XCC event log, and resolve related errors if found any.
2. Reseat power supply.
3. If the error recurs, replace power supply.

Processor problems

Use this information to solve problems related to a monitor or video.

- "The server goes directly to the POST event viewer when it is turned on." on page 171

The server goes directly to the POST event viewer when it is turned on.

1. Check the light path diagnostics LEDs and the XCC event log, and resolve any errors that have occurred.
2. Make sure that the server supports all the processors and that the processors match in speed and cache size. You can view processor details from system setup. To determine if the processor is supported for the server, see https://serverproven.lenovo.com/
3. (Trained technician only) Make sure that processor 1 is seated correctly
4. (Trained technician only) Remove processor 2 and restart the server. (3 and 4)
5. Replace the following components one at a time, in the order shown, restarting the server each time:
   a. (Trained technician only) Processor
   b. (Trained technician only) System board

Serial-device problems

Use this information to solve problems with serial ports or devices.

- "Number of displayed serial ports is less than the number of installed serial ports" on page 171
- "Serial device does not work" on page 172

Number of displayed serial ports is less than the number of installed serial ports

Complete the following steps until the problem is solved.

1. Make sure that:
   - Each port is assigned a unique address in the Setup utility and none of the serial ports is disabled.
   - The serial-port adapter (if one is present) is seated correctly
2. Reseat the serial port adapter.
3. Replace the serial port adapter.

Serial device does not work

1. Make sure that:
   - The device is compatible with the server.
   - The serial port is enabled and is assigned a unique address.
   - The device is connected to the correct connector.
2. Reseat the following components::
   a. Failing serial device.
   b. Serial cable.
3. Replace the following components:
   a. Failing serial device.
   b. Serial cable.
4. (Trained technician only) Replace the system board.

Software problems

Use this information to solve software problems.

1. To determine whether the problem is caused by the software, make sure that:
   - The server has the minimum memory that is needed to use the software. For memory requirements, see the information that comes with the software.

     Note: If you have just installed an adapter or memory, the server might have a memory-address conflict.
   - The operating system is on the ServerProven list (see https://serverproven.lenovo.com/) and supported by your hardware.
   - The software is designed to operate on the server.
   - Other software works on the server.
   - The software works on another server.
2. If you receive any error messages while you use the software, see the information that comes with the software for a description of the messages and suggested solutions to the problem.
3. Check the operating system logs for any events related to your software and attempt to resolve them.
4. Contact your place of purchase of the software.

Appendix A. Hardware disassembling for recycle

Follow the instructions in this section to recycle components with compliance with local laws or regulations.

Disassemble the system board for recycle

Follow the instructions in this section to disassemble the system board before recycling.

Before disassembling the system board:

1. Remove the system board from the server (see "Remove the system board" on page 130).
2. Refer to local environmental, waste or disposal regulations to ensure compliance.

Complete the following steps to disassemble the system board:

Step 1. Remove the following components as illustrated:

- 15 slotted screws
- Two standoffs (with 12 mm wrench)
- One plunger (with 11 mm and 16 mm wrench)
- Four PH2 captive screws on the heat sink

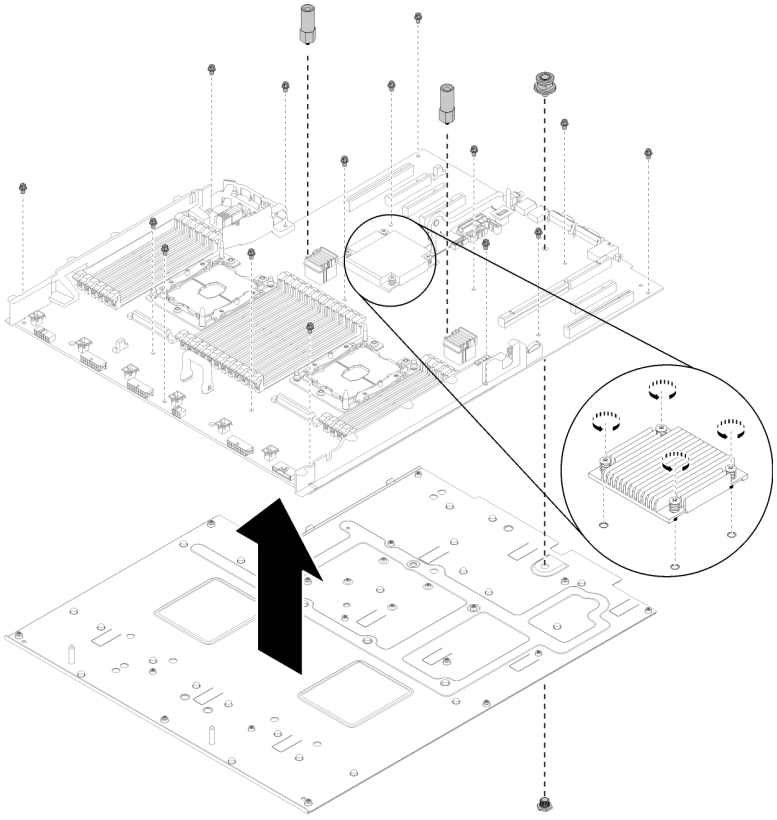

Figure 143. Disassembling the system board

Step 2. Separate the system board from the supporting sheet metal.

© Copyright Lenovo 2017, 2023

After disassembling the system board, comply with local regulations when recycling.

Disassemble the processor and memory expansion tray for recycle

Follow the instructions in this section to disassemble the processor and memory expansion tray before recycle.

Before disassembling the processor and memory expansion tray:

1. Remove the processor and memory expansion tray from the server (see “Remove the processor and memory expansion tray” on page 120).
2. Refer to local environmental, waste or disposal regulations to ensure compliance.

Complete the following steps to disassemble the processor and memory expansion tray:

Step 1. Remove the 13 screws as illustrated.

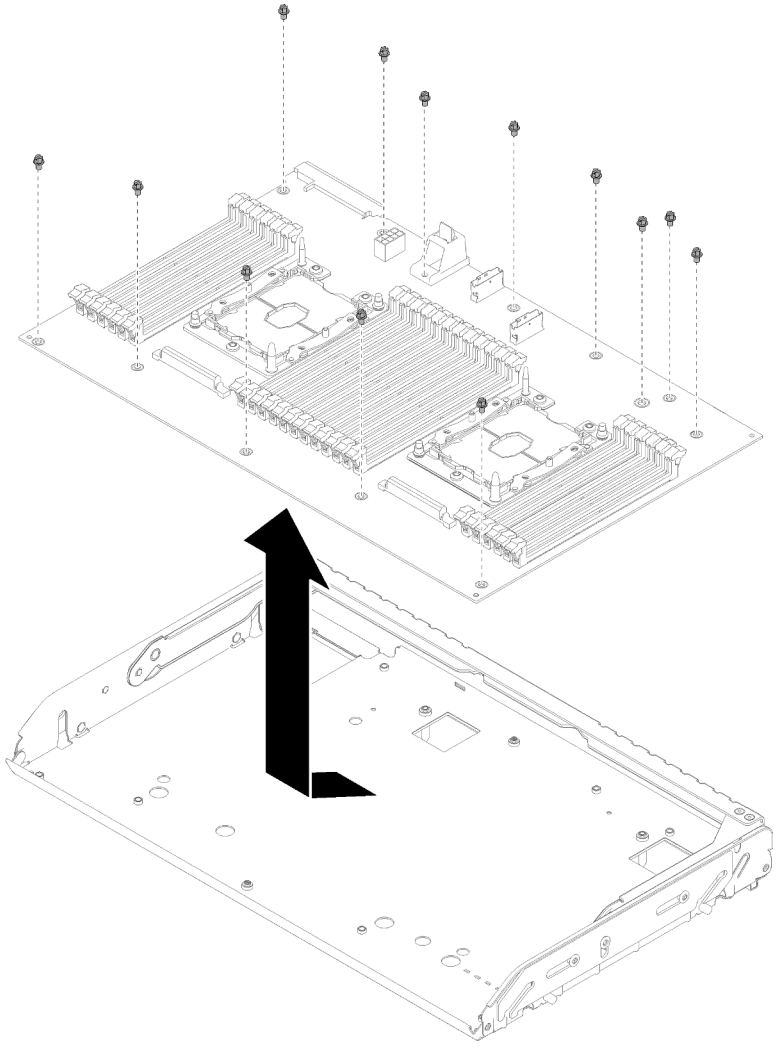

Figure 144. Disassembling the expansion tray

Step 2. Separate the expansion board from the supporting tray.

After disassembling the processor and memory expansion tray, comply with local regulations when recycling.

Disassemble the server for chassis recycle

Follow the instructions in this section to disassemble the server before recycling the chassis.

Before disassembling the server:

1. Read the safety information and installation guidelines (see “Safety” on page iii and “Installation Guidelines” on page 55).
2. Turn off the server and peripheral devices and disconnect the power cords and all external cables (see “Power off the server” on page 11).
3. If the server is installed in a rack, slide the server out on its rack slide rails to gain access to the top cover, or remove the server from the rack.

Complete the following steps to disassemble the server for chassis recycle:

Step 1. Remove the security bezel (see “Remove the security bezel” on page 124).

Step 2. Remove the top cover (see “Remove the top cover” on page 145).

Step 3. Remove both power supply units (see “Remove a hot-swap power supply unit” on page 101).

Step 4. Remove the system board air baffle (see “Remove the system board air baffle and the power interposer” on page 126) or the processor and memory expansion tray and the expansion tray air baffle (see “Remove the processor and memory expansion tray” on page 120).

Step 5. Remove the fan cage assembly (see “Remove the fan cage assembly” on page 65).

Step 6. Remove all the drives that are installed (see “Remove a 2.5-inch hot-swap drive” on page 59).

Step 7. Remove both the drive backplanes that are installed (see “Remove a drive backplane” on page 58).

Step 8. Remove the front VGA assembly (see “Remove the front VGA assembly” on page 71).

Step 9. Remove the operator panel tray assembly (see “Remove the front operator panel” on page 92).

Step 10. Remove the PCIe riser-card assembly (see “Remove the PCIe riser-card assembly” on page 93).

Step 11. Remove all the adapters that are installed (see “Remove an adapter” on page 98 and “Remove the LOM adapter” on page 75).

Step 12. Remove the memory modules that are installed on the system board (see “Remove a memory module” on page 84).

Step 13. Remove both PHMs that are installed on the system board (see “Remove a processor and heat sink” on page 110).

Step 14. Remove the system board (see “Remove the system board” on page 130).

After disassembling the server, comply with local regulations when recycling the chassis.

Appendix B. Getting help and technical assistance

If you need help, service, or technical assistance or just want more information about Lenovo products, you will find a wide variety of sources available from Lenovo to assist you.

On the World Wide Web, up-to-date information about Lenovo systems, optional devices, services, and support are available at:

http://datacentersupport.lenovo.com

Note: This section includes references to IBM web sites and information about obtaining service. IBM is Lenovo's preferred service provider for ThinkSystem.

Before you call

Before you call, there are several steps that you can take to try and solve the problem yourself. If you decide that you do need to call for assistance, gather the information that will be needed by the service technician to more quickly resolve your problem.

Attempt to resolve the problem yourself

You can solve many problems without outside assistance by following the troubleshooting procedures that Lenovo provides in the online help or in the Lenovo product documentation. The Lenovo product documentation also describes the diagnostic tests that you can perform. The documentation for most systems, operating systems, and programs contains troubleshooting procedures and explanations of error messages and error codes. If you suspect a software problem, see the documentation for the operating system or program.

You can find the product documentation for your ThinkSystem products at https://pubs.lenovo.com/

You can take these steps to try to solve the problem yourself:

- Check all cables to make sure that they are connected.
- Check the power switches to make sure that the system and any optional devices are turned on.
- Check for updated software, firmware, and operating-system device drivers for your Lenovo product. The Lenovo Warranty terms and conditions state that you, the owner of the Lenovo product, are responsible for maintaining and updating all software and firmware for the product (unless it is covered by an additional maintenance contract). Your service technician will request that you upgrade your software and firmware if the problem has a documented solution within a software upgrade.
- If you have installed new hardware or software in your environment, check https://serverproven.lenovo.com/ to make sure that the hardware and software is supported by your product.
- Go to http://datacentersupport.lenovo.com and check for information to help you solve the problem.
  - Check the Lenovo forums at https://forums.lenovo.com/t5/Datacenter-Systems/ct-p/sv_eg to see if someone else has encountered a similar problem.

You can solve many problems without outside assistance by following the troubleshooting procedures that Lenovo provides in the online help or in the Lenovo product documentation. The Lenovo product documentation also describes the diagnostic tests that you can perform. The documentation for most systems, operating systems, and programs contains troubleshooting procedures and explanations of error messages and error codes. If you suspect a software problem, see the documentation for the operating system or program.

© Copyright Lenovo 2017, 2023

Gathering information needed to call Support

If you believe that you require warranty service for your Lenovo product, the service technicians will be able to assist you more efficiently if you prepare before you call. You can also see http://datacentersupport.lenovo.com/warrantylookup for more information about your product warranty.

Gather the following information to provide to the service technician. This data will help the service technician quickly provide a solution to your problem and ensure that you receive the level of service for which you might have contracted.

- Hardware and Software Maintenance agreement contract numbers, if applicable
- Machine type number (Lenovo 4-digit machine identifier)
- Model number
- Serial number
- Current system UEFI and firmware levels
- Other pertinent information such as error messages and logs

As an alternative to calling Lenovo Support, you can go to https://support.lenovo.com/servicerequest to submit an Electronic Service Request. Submitting an Electronic Service Request will start the process of determining a solution to your problem by making the pertinent information available to the service technicians. The Lenovo service technicians can start working on your solution as soon as you have completed and submitted an Electronic Service Request.

Collecting service data

To clearly identify the root cause of a server issue or at the request of Lenovo Support, you might need collect service data that can be used for further analysis. Service data includes information such as event logs and hardware inventory.

Service data can be collected through the following tools:

- **Lenovo XClarity Provisioning Manager**

  Use the Collect Service Data function of Lenovo XClarity Provisioning Manager to collect system service data. You can collect existing system log data or run a new diagnostic to collect new data.

- **Lenovo XClarity Controller**

  You can use the Lenovo XClarity Controller web interface or the CLI to collect service data for the server. The file can be saved and sent to Lenovo Support.

  - For more information about using the web interface to collect service data, see the “Downloading service data” section in the XCC documentation version compatible with your server at https://pubs.lenovo.com/lxcc-overview/.
  - For more information about using the CLI to collect service data, see the “ffdc command” section in the XCC documentation version compatible with your server at https://pubs.lenovo.com/lxcc-overview/.

- **Lenovo XClarity Administrator**

  Lenovo XClarity Administrator can be set up to collect and send diagnostic files automatically to Lenovo Support when certain serviceable events occur in Lenovo XClarity Administrator and the managed endpoints. You can choose to send diagnostic files to Lenovo Support using Call Home or to another service provider using SFTP. You can also manually collect diagnostic files, open a problem record, and send diagnostic files to the Lenovo Support Center.

  You can find more information about setting up automatic problem notification within the Lenovo XClarity Administrator at http://sysmgt.lenovofiles.com/help/topic/com.lenovo.lxca.doc/admin_setupcallhome.html.

- **Lenovo XClarity Essentials OneCLI**

  Lenovo XClarity Essentials OneCLI has inventory application to collect service data. It can run both in-band and out-of-band. When running in-band within the host operating system on the server, OneCLI can collect information about the operating system, such as the operating system event log, in addition to the hardware service data.

  To obtain service data, you can run the `getinfor` command. For more information about running the `getinfor`, see https://pubs.lenovo.com/lxce-onecli/onecli_r_getinfor_command.

Contacting Support

You can contact Support to obtain help for your issue.

You can receive hardware service through a Lenovo Authorized Service Provider. To locate a service provider authorized by Lenovo to provide warranty service, go to https://datacentersupport.lenovo.com/serviceprovider and use filter searching for different countries. For Lenovo support telephone numbers, see https://datacentersupport.lenovo.com/supportphonelist for your region support details.

Appendix C. Notices

Lenovo may not offer the products, services, or features discussed in this document in all countries. Consult your local Lenovo representative for information on the products and services currently available in your area.

Any reference to a Lenovo product, program, or service is not intended to state or imply that only that Lenovo product, program, or service may be used. Any functionally equivalent product, program, or service that does not infringe any Lenovo intellectual property right may be used instead. However, it is the user's responsibility to evaluate and verify the operation of any other product, program, or service.

Lenovo may have patents or pending patent applications covering subject matter described in this document. The furnishing of this document is not an offer and does not provide a license under any patents or patent applications. You can send inquiries in writing to the following:

Lenovo (United States), Inc.
1009 Think Place
Morrisville, NC 27560
U.S.A.
Attention: Lenovo VP of Intellectual Property

LENOVO PROVIDES THIS PUBLICATION “AS IS” WITHOUT WARRANTY OF ANY KIND, EITHER EXPRESS OR IMPLIED, INCLUDING, BUT NOT LIMITED TO, THE IMPLIED WARRANTIES OF NON-INFRINGEMENT, MERCHANTABILITY OR FITNESS FOR A PARTICULAR PURPOSE. Some jurisdictions do not allow disclaimer of express or implied warranties in certain transactions, therefore, this statement may not apply to you.

This information could include technical inaccuracies or typographical errors. Changes are periodically made to the information herein; these changes will be incorporated in new editions of the publication. Lenovo may make improvements and/or changes in the product(s) and/or the program(s) described in this publication at any time without notice.

The products described in this document are not intended for use in implantation or other life support applications where malfunction may result in injury or death to persons. The information contained in this document does not affect or change Lenovo product specifications or warranties. Nothing in this document shall operate as an express or implied license or indemnity under the intellectual property rights of Lenovo or third parties. All information contained in this document was obtained in specific environments and is presented as an illustration. The result obtained in other operating environments may vary.

Lenovo may use or distribute any of the information you supply in any way it believes appropriate without incurring any obligation to you.

Any references in this publication to non-Lenovo Web sites are provided for convenience only and do not in any manner serve as an endorsement of those Web sites. The materials at those Web sites are not part of the materials for this Lenovo product, and use of those Web sites is at your own risk.

Any performance data contained herein was determined in a controlled environment. Therefore, the result obtained in other operating environments may vary significantly. Some measurements may have been made on development-level systems and there is no guarantee that these measurements will be the same on generally available systems. Furthermore, some measurements may have been estimated through extrapolation. Actual results may vary. Users of this document should verify the applicable data for their specific environment.

© Copyright Lenovo 2017, 2023

Trademarks

Lenovo, the Lenovo logo, Flex System, System x, NeXtScale System, x Architecture and ThinkSystem are trademarks of Lenovo in the United States, other countries, or both.

Intel and Intel Xeon are trademarks of Intel Corporation in the United States, other countries, or both.

Internet Explorer, Microsoft, and Windows are trademarks of the Microsoft group of companies.

Linux is a registered trademark of Linus Torvalds.

Other company, product, or service names may be trademarks or service marks of others.

Important notes

Processor speed indicates the internal clock speed of the processor; other factors also affect application performance.

CD or DVD drive speed is the variable read rate. Actual speeds vary and are often less than the possible maximum.

When referring to processor storage, real and virtual storage, or channel volume, KB stands for 1 024 bytes, MB stands for 1 048 576 bytes, and GB stands for 1 073 741 824 bytes.

When referring to drive capacity or communications volume, MB stands for 1 000 000 bytes, and GB stands for 1 000 000 000 bytes. Total user-accessible capacity can vary depending on operating environments.

Maximum internal drive capacities assume the replacement of any standard drives and population of all drive bays with the largest currently supported drives that are available from Lenovo.

Maximum memory might require replacement of the standard memory with an optional memory module.

Each solid-state memory cell has an intrinsic, finite number of write cycles that the cell can incur. Therefore, a solid-state device has a maximum number of write cycles that it can be subjected to, expressed as `total bytes written` (TBW). A device that has exceeded this limit might fail to respond to system-generated commands or might be incapable of being written to. Lenovo is not responsible for replacement of a device that has exceeded its maximum guaranteed number of program/erase cycles, as documented in the Official Published Specifications for the device.

Lenovo makes no representations or warranties with respect to non-Lenovo products. Support (if any) for the non-Lenovo products is provided by the third party, not Lenovo.

Some software might differ from its retail version (if available) and might not include user manuals or all program functionality.

Telecommunication regulatory statement

This product may not be certified in your country for connection by any means whatsoever to interfaces of public telecommunications networks. Further certification may be required by law prior to making any such connection. Contact a Lenovo representative or reseller for any questions.

Electronic emission notices

When you attach a monitor to the equipment, you must use the designated monitor cable and any interference suppression devices that are supplied with the monitor.

Taiwan Region BSMI RoHS declaration

單元 Unit	限用物質及其化學符號 Restricted substances and its chemical symbols					
	鉛Lead (PB)	汞Mercury (Hg)	鎘Cadmium (Cd)	六價鉻 Hexavalent chromium (Cr^{+6})	多溴聯苯 Polybrominated biphenyls (PBB)	多溴二苯醚 Polybrominated diphenyl ethers (PBDE)
機架	○	○	○	○	○	○
外部蓋板	○	○	○	○	○	○
機械組合件	–	○	○	○	○	○
空氣傳動設備	–	○	○	○	○	○
冷卻組合件	–	○	○	○	○	○
內存模組	–	○	○	○	○	○
處理器模組	–	○	○	○	○	○
電纜組合件	–	○	○	○	○	○
電源供應器	–	○	○	○	○	○
儲備設備	–	○	○	○	○	○
印刷電路板	–	○	○	○	○	○

備考1. 〝超出0.1 wt %〞及〝超出0.01 wt %〞係指限用物質之百分比含量超出百分比含量基準值。

Note1 : “exceeding 0.1wt%” and “exceeding 0.01 wt%” indicate that the percentage content of the restricted substance exceeds the reference percentage value of presence condition.

備考2. 〝○〞係指該項限用物質之百分比含量未超出百分比含量基準值。

Note2 : “○”indicates that the percentage content of the restricted substance does not exceed the percentage of reference value of presence.

備考3. 〝-〞係指該項限用物質為排除項目。

Note3 : The “-“ indicates that the restricted substance corresponds to the exemption.

0220

Taiwan Region import and export contact information

Contacts are available for Taiwan Region import and export information.

委製商/進口商名稱: 台灣聯想環球科技股份有限公司
進口商地址: 台北市南港區三重路 66 號 8 樓
進口商電話: 0800-000-702

Index

A

ac power LED 21, 23
adapter
  install 99
  remove 98
air baffle
  replacement 126
assert
  physical presence 138

B

backplane
  connectors 32
  install 59
  remove 58
backplane, drive
  replacement 58
bezel
  installing 125
  removing 124
button
  system-identification
    rear 23
button, light path 26
button, presence detection 16
buttons, available on the server 26

C

cable routing
  drive 34
cables, power and signal
  connecting to internal drives 34
CD-RW/DVD
  drive activity LED 13
  eject button 13
chassis 175
CMOS battery
  install 64
  replacement 61
collecting service data 178
completing
  parts replacement 147
connecting drive cables 34
connector
  Ethernet systems-management 21
  Lenovo XClarity Controller 24
  power supply 21
  serial 21, 23
  USB 15, 21, 23
  video
    front 13–14
    rear 21, 24
connector, electrostatic-discharge 13
connectors
  backplanes 32
  memory expansion tray 28
  on the rear of the server 21
  optional processor 28
  PCIe riser-card 31
  RAID adapter 33
  rear 21
connectors, internal system board 25
contamination, particulate and gaseous 5
controls and LEDs
  operator information panel 16
cover, server
  replacement 144
CPU
  installing 114
  removing 110
  replacing 110
creating a personalized support web page 177
custom support web page 177

D

dc power LED 21, 23
devices, static-sensitive
  handling 57
DIMM
  installing 86
  removing 84
disassembling 173–175
drive
  cable routing 34
  remove 59
drive,
  install 60
drives
  connecting power and signal cables 34

E

electrostatic-discharge connector 13
enable
  TPM 136
Ethernet
  controller
    troubleshooting 156
  Lenovo XClarity Controller 24
  link status LED 21
  systems-management connector 21
Ethernet activity
  LED 21
Ethernet adapter slot, 10 Gb 21
Ethernet controller problems
  solving 156

F

fan
  install 69
  remove 68
fan cage
  install 67
fan cage assembly
  remove 65
fan problems 159
fan, fan cage
  replacement 65
firmware
  update 6
firmware updates 6
force NMI button
  function 26
front operator panel 15
  controls and LEDs 16
  install 93

© Copyright Lenovo 2017, 2023

remove 92
front operator panel with LCD display 16
front VGA assembly
install 73
remove 71
replacement 70
front view
LED location 13–14
front view of the server 13–14

G

gaseous contamination 5
Getting help 177
guidelines
options installation 55
system reliability 56

H

handling static-sensitive devices 57
hard disk drive activity LED 13–14
hard disk drive problems 157
hard disk drive status LED 13–14
hard-disk drive 59–60
hardware service and support telephone numbers 179
heat sink
installing 114
removing 110
replacing 110
help 177

I

important notices 182
install
adapter 99
backplane 59
CMOS battery 64
drive 60
fan 69
fan cage 67
front operator panel 93
front VGA assembly 73
LOM adapter 77
M.2 backplane 80
M.2 drive 82
operator panel tray assembly 90
power supply 105
processor and memory expansion tray 122
RAID adapter 99
system board 132
system board air baffle 128
top cover 146
installation
guidelines 55
installation guidelines 55
installing
CPU 114
DIMM 86
heat sink 114
installing
memory module 86
memory module
installing 86
microprocessor 114
PHM 114
processor 114
processor heat sink module 114
processor-heat-sink module 114
security bezel 125
TCM/TPM adapter 142
installPCIe riser-card assembly 96
insufficient PCIe resource
solving 167
intermittent problems 159
internal, system board connectors 25
Introduction 1

J

jumpers, switches, and buttons
on the system board 26

K

keyboard problems 160

L

LCD
system information display panel 16
LCD system information display panel 16
LED 16
ac power 21, 23
dc power 21, 23
Ethernet-link status 21
for CD-RW/DVD drive activity 13
for Ethernet activity 21
for hard disk drive activity 13–14
for hard disk drive status 13–14
for solid state drive activity 13
for solid state drive status 13–14
identification 15–16
network activity 15–16
power 15
power-on 16
rear 21
power-supply 21, 23
system error 15–16
system information 16
system locator 16
system-error 16
rear 21, 23
system-identification
rear 21, 23
LEDs
DIMM 28
on the system board 27
optional processor 28
light path diagnostics panel
NMI button 21
LOM adapter
install 77
remove 75
replacement 75

M

M.2
replacement 78
M.2 backplane
install 80
remove 79
M.2 drive
install 82
remove 82
memory
problems 161

memory expansion tray 28
memory module, DIMM
replacement 84
ML adapter slot, 1 Gb 21
monitor problems 163, 171
mouse problems 160

N

network
problems 165
Network
MAC address 14
NMI button 24, 26
on the light path diagnostics panel 21
notes, important 182
notices 181
NVMe 59–60

O

observable problems 165
operator information panel release latch 13
operator panel tray assembly
install 90
optional processor 28
optional-device problems 167

P

particulate contamination 5
parts list 49
parts replacement, completing 147
PCIe
PCIe riser-card assembly
replacement 93
PCIe riser-card assembly, adapter
replace 93
troubleshooting 167
PCIe adapter
slots 21
PCIe riser-card
connectors 31
PHM
installing 114
removing 110
replacing 110
physical presence 138
power
power-control button 16
power and signal cables
connecting to internal drives 34
power cords 53
power interposer
replacement 126
power off the server 11
power on the server 10
power problems 155
power supply
install 105
remove 101
replacement 101
power-on
LED
rear 21
power-on LED 16
power-supply LED 21, 23
presence detection button 16
problems
Ethernet controller 156
fan 159
hard disk drive 157
intermittent 159
keyboard 160
memory 161
monitor 163, 171
mouse 160
network 165
observable 165
optional devices 167
PCIe 167
power 155
power on and power off 169
serial-device 171
software 172
USB device 160
video 163, 171
processor
installing 114
removing 110
replacing 110
processor and memory expansion tray 173–174
install 122
remove 120
processor and memory expansion tray, expansion tray air baffle
replacement 119
processor heat sink module
installing 114
removing 110
replacing 110
processor-heat-sink module
installing 114
removing 110

R

rack release latches 13, 16
RAID adapter 98, 100
connectors 33
rear view 21
of the server 21
recycle 173–175
recycling 173–175
redundant array of independent disks (RAID) 61
remove
adapter 98
backplane 58
drive 59
fan 68
fan cage assembly 65
front operator panel 92
front VGA assembly 71
LOM adapter 75
M.2 drive 82
power supply 101
processor and memory expansion tray 120
system board 130
system board air baffle 126
top cover 145
removing
CPU 110
DIMM 84
heat sink 110
memory module
removing 84
microprocessor 110
PHM 110
processor 110
processor heat sink module 110
processor-heat-sink module 110
removing
memory module 84
security bezel 124

© Copyright Lenovo 2017, 2023

TCM/TPM adapter 140
replace
PCIe
PCIe riser-card assembly, adapter 93
replacement
air baffle 126
backplane, drive 58
CMOS battery 61
fan, fan cage 65
front VGA assembly 70
LOM adapter 75
M.2 78
memory module, DIMM 84
PCIe
PCIe riser-card assembly 93
power interposer 126
power supply 101
processor and memory expansion tray, expansion tray air baffle 119
security bezel 124
server cover 144
system board 130
TCM/TPM adapter 140
replacementfront operator panel, operator panel tray assembly 88
replacing
CPU 110
heat sink 110
microprocessor 110
PHM 110
processor 110
processor heat sink module 110
retainer on M.2 backplane
adjustment 78

S

safety iii
safety inspection checklist iv
SATA/SAS 59–60
Secure Boot 139
security advisories 10
security bezel
installing 125
removing 124
replacement 124
serial connector 21, 23
serial number 134
serial-device problems 171
server
buttons function 26
server power on or power off problems 169
server rear view 21
server, front view 13–14
service and support
before you call 177
hardware 179
software 179
service data 178
signal and power cables
connecting to internal drives 34
slot
LOM adapter 22
ML adapter, 1 GB 21
software 13
software problems 172
software service and support telephone numbers 179
solid state drive activity LED 13–14
solid state drive status LED 13–14
solid-state drive 59–60
solving
Ethernet controller problems 156
insufficient PCIe resource 167
solving power problems 155
Specifications 1
static-sensitive devices
handling 57
support web page, custom 177
switch block, on the system board 26
switches
on the system board 26
switches, jumpers, and buttons
on the system board 26
system
error LED front 16
Identification LED, front 16
system-error LED
rear 21
System
information LED 16
system board 173
install 132
LEDs 27
remove 130
replacement 130
SW13 switch block description 26
switches, jumpers, and buttons 26
System board
LED 154
system board air baffle
install 128
remove 126
system board internal connectors 25
system reliability guidelines 56
system-identification
button
rear 23
LED
rear 21, 23

T

Taiwan Region BSMI RoHS declaration 183
Taiwan Region import and export contact information 184
TCM 136
TCM/TPM adapter
installing 142
removing 140
replacement 140
Tech Tips 10
telecommunication regulatory statement 182
telephone numbers 179
top cover
install 146
remove 145
TPM 136
TPM 1.2 138
TPM 2.0 138
TPM policy 136
TPM version 138
trademarks 182
troubleshooting 163, 167, 171–172
by symptom 157
DCPMM 161
DRAM 161
fan problems 159
hard disk drive problems 157
intermittent problems 159
keyboard problems 160
memory problems 161
mouse problems 160
network problems 165
observable problems 165
power on and power off problems 169
serial-device problems 171
symptoms-based troubleshooting 157

USB-device problems 160
video 163, 171
Trusted Cryptographic Module 136
Trusted Platform Module 136

U

UEFI Secure Boot 139
updating,
machine type 134
USB
connector 21, 23
USB-device problems 160

V

video connector
front 13–14
rear 21, 24
video problems 163, 171

W

working inside the server
power on 57

© Copyright Lenovo 2017, 2023

Lenovo

Part Number: SP47A24295

Printed in China

(1P) P/N: SP47A24295